Product Information & Specifications

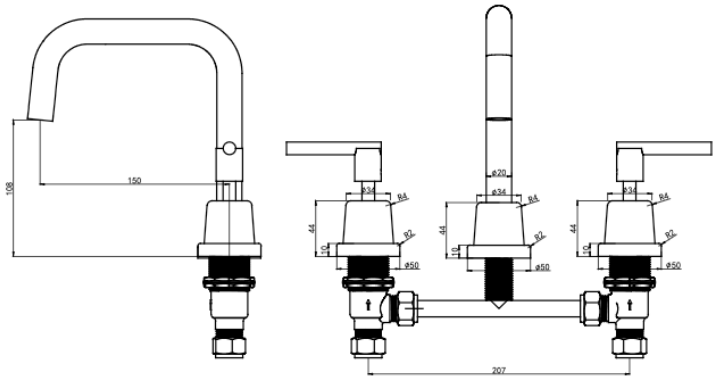

PRODUCT CODE: ASP6397

Aspire Air Lever Handle 3-Piece Basin Set Brushed Brass

WELS Rating	5 Star
WELS Star Rating	5.5L/Min
WELS Registration	T48680
Features	• 304 Stainless Steel • PVD Finish • 1/4 Turn Ceramic Disc

Lead Free

The more stars the more water efficient
WATER RATING
www.waterrating.gov.au
5.5 litres per minute
In accordance with AS/NZS 6400
Licence No.0395
ART DESIGN BY LINSOL PTY LTD

Warranty details

This product is covered for 15 year warranty on the main body. 7 year replacement product or parts (ceramic cartridge, aerator and flexible hoses). This product must be installed by a licensed plumber and in accordance to AS/NZ 3500 Series Standards, failure to do so will void your warranty.

Warranty requirments

Please pay attention to the below details. Failure to do so will void your warranty:

- Do not use acid cleansers
- Do not use abrasive cleansers
- Do not use abrasive cloths

Maintenance instructions

- Rinse surface with warm water
- Dry with a soft cloth
- To remove surface marks, please use a neutral cleanser

*All measurements are in millimeters and subject to change without notice. For ceramic products, please allow +/- 5mm tolerance for manufacturing variance. Models and specifications are current at the time of publication, subject to change without notice. Images are for pictorial purposes and should be used as a guide only.