Michelle

RAIL SHOWER WITH SOAP BASKET

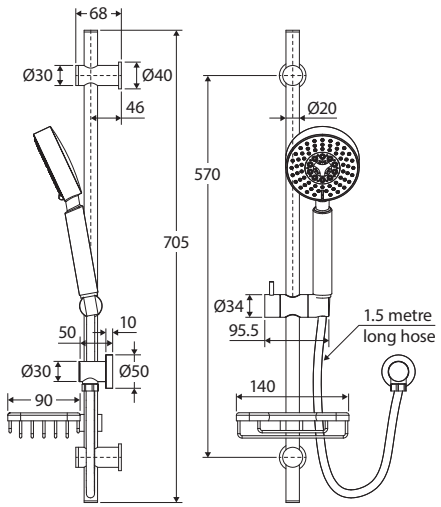

Features

- Polished chrome finish
- **WELS 3 Star rated, 7L/min**

Rail:

- Slider to adjust height of hand shower
- Brass slider and wall mounts
- Deluxe stainless steel elbow
- Rail thickness: 20 mm
- 1.5 metre stainless steel flexible hose

MICHELLE Multifunction Hand Piece (MSH017):

- Five water-flow settings: normal, massage, misting, spray and massage, and spray and misting
- Easy to clean TPR nozzles
- Made from ABS

Soap Basket (MST036):

- Made from solid brass

Available in

Chrome
444101

Cleaning & Care

- Regularly clean with mild soapy water using a microfibre cloth.
- In highly polluted or coastal locations, we recommend cleaning 2-3 times per week.
- Do not use harsh detergents, bleach, cream cleaners or citrus based cleaners. These substances are abrasive and will damage the surface.
- Do not use undue pressure and wipe in one direction only.

WaterMark

The more stars the more water efficient
WATER RATING
www.waterrating.gov.au
7.0 litres per minute
In accordance with AS/NZS 6400
Licence No. 0252
Fienza

We aim to ensure that specifications are correct at the time of publication. All measurements are shown in millimetres. Always use measurements of actual product received for final specification as the technical drawing may contain differences. Due to printing limitations, physical colour may vary from the image shown. Fienza reserves the right to make modifications without prior notice.