fienza

KAYA SQUARELINE HOB SET - LEVER TAPS - BRUSHED COPPER

Code	344106CO-LF
Colour	Brushed Copper
Material	Lead Free Brass & Stainless Steel
Install Type	Bench Mounted

Details

- PVD brushed copper finish
- Designed for basin, bath and sink
- Fixed position outlet
- Includes pre-fitted basin aerator and free-flow aerator
- Push-fit installation
- Male 1/2" BSPP inlet
- Contra-rotating outward taps with concealed backplates
- 1/4 turn ceramic discs
- Breech set included
- Made from stainless steel or lead-free brass*

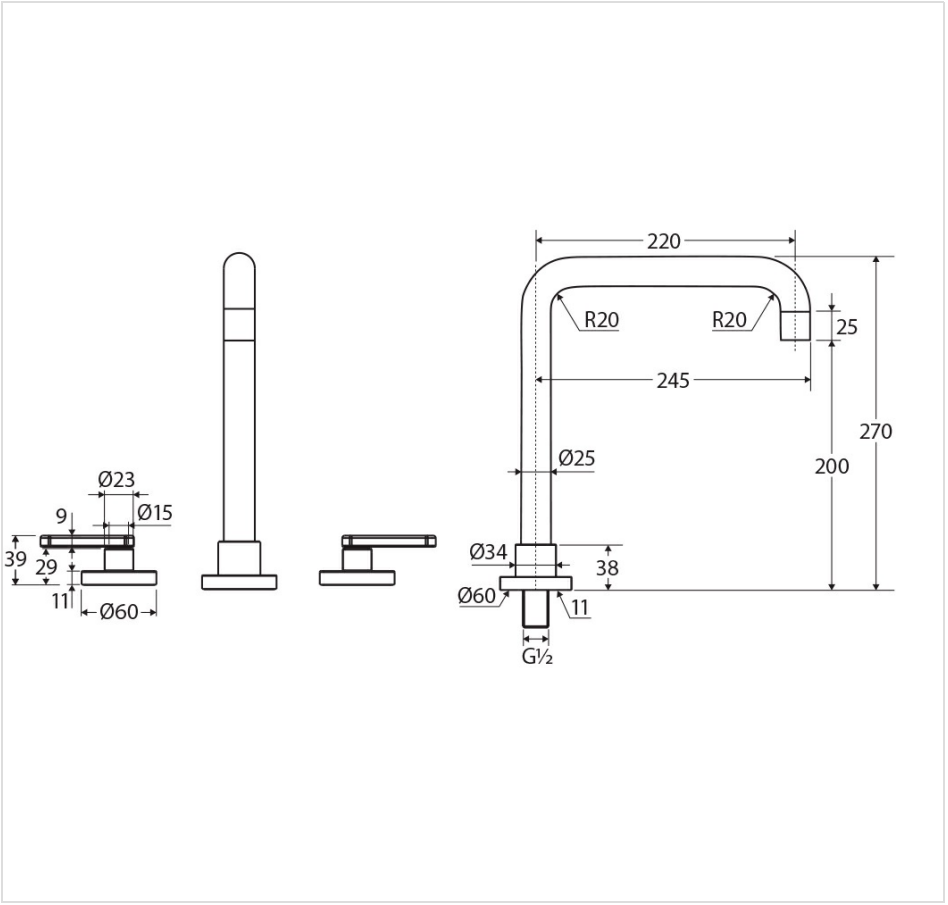



Product/Installation Notes

This product may have a visible Fienza or WaterMark logo.

Specifications

Overall Size	60 mm (L) × 280 mm (W) × 270 mm (H)
Weight	
Warranty	Visit: **fienza.com.au/warranty** for more details
WELS Registration	Pending WELS Registration
WELS Flow Rating	5 Star rated, 5L/min when installed over basin

We aim to ensure that specifications are correct at the time of publication. All measurements are shown in millimetres. Always use measurements of actual product received for final specification as the technical drawing may contain differences. Please note this product may have a visible printed FIENZA or Watermark logo. Due to printing limitations, physical colour may vary from the image shown. FIENZA reserves the right to make modifications without prior notice.