fienza

KASSI ENSUITE 900 WALL HUNG VANITY

Code	KE90W
Colour	Various
Material	FSC certified, E0 board
Install Type	Wall Hung

Details

Select from available configurations below.

Delgado Ceramic Basin Top **RRP $1209 • KE90W-DT Solid Surface Top or Silica Free Stone Top RRP $1995 • KE90W-S**

- Select from over 20 **woodgrain cabinet finishes**
- Horizontal woodgrain direction
- 'Confident close' drawer damping system combines smooth, fast closing with late deceleration to provide a quiet landing on close
- Full extension runners allow easy access to the full depth of the drawer
- Wall hung
- Ensuite depth (365 mm)
- One drawer and open shelf
- Select from bevelled finger-pull or **handles** (included in price)
- Made in Australia with FSC certified, E0 board

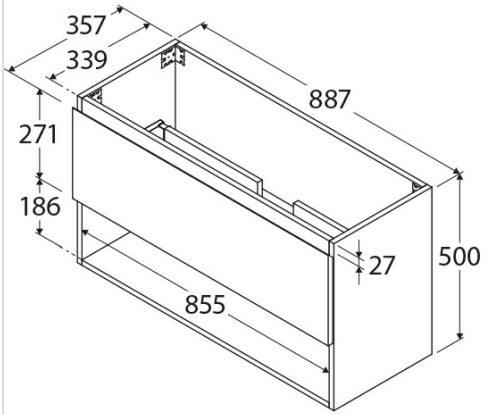

TOP VIEW: DRAWER AREA
(Dimensions may vary depending on basin position)

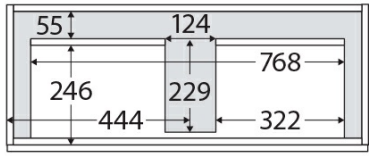

SIDE VIEW:
DRAWER STORAGE

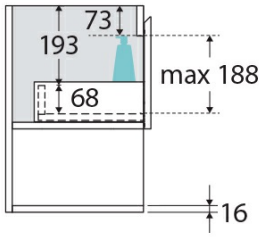





Specifications

Overall Size	900 mm (L) × 365 mm (W) × 520 mm (H)
Weight	
Warranty	Visit: **fienza.com.au/warranty** for more details
WELS Registration	N/A
WELS Flow Rating	N/A

Product/Installation Notes

Please note that certain vanity combinations are not compatible or configurable with each other when it comes to installation. Customers are responsible for verifying all specifications and measurements of product selections are compatible before ordering, including cabinetry, vanity tops, basins, custom basin positions, tap holes, plumbing, wastes, and related fittings.

We aim to ensure that specifications are correct at the time of publication. All measurements are shown in millimetres. Always use measurements of actual product received for final specification as the technical drawing may contain differences. Please note this product may have a visible printed FIENZA or Watermark logo. Due to printing limitations, physical colour may vary from the image shown. FIENZA reserves the right to make modifications without prior notice.