Nero

3-Function Shower Rail

Finish & SKU

Chrome
NR314aCH

Brushed Nickel
NR314aBN

Matte Black
NR314aMB

Brushed Gold
NR314aBG

Gun Metal
NR314aGM

Specifications

Watermark License
WM-060093

Temperature Rating
Min 1°C-Max 75°C

Pressure Rating
Min 150kpa-Max 500kpa

Warranty

Features

- 3 Function hand shower.
- Dual check valve complies with AS/NZS 3500 standards for backflow prevention.
- 1.5 meter smooth PVC hose.
- Top water inlet for easy connection.
- Adjustable bottom bracket for flexible installation.
- Stylish design to complements a modern aesthetic.
- Available in 5 premium finishes.

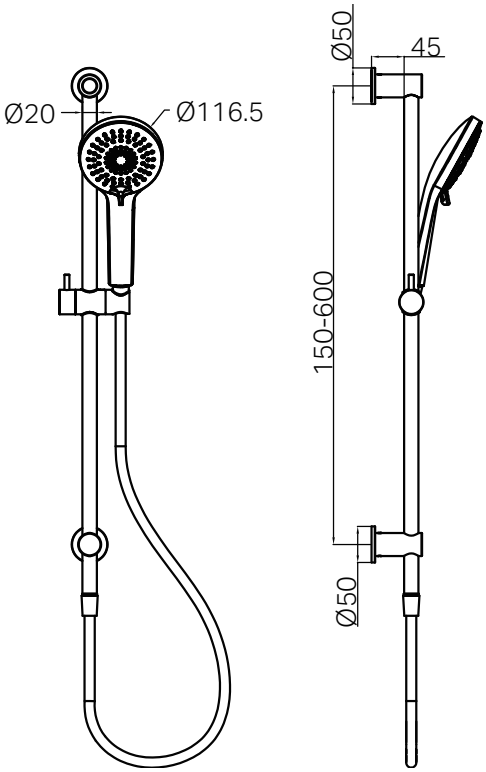

Maintenance And Care

- Regularly check the mixer and connections for signs of wear or leaks.
- Clean the tap with mild soapy water to maintain its appearance, avoiding harsh chemicals and abrasive materials that may damage the finish.

- Dimensions are nominal measurements only.