Nero

Mecca Care 32mm Ambulant 90 Degree Bent Tube Grab Rail 450X450mm

Finish & SKU

Chrome
NRCR3290dCH

Brushed Nickel
NRCR3290dBN

Matte Black
NRCR3290dMB

Brushed Gold
NRCR3290dBG

Brushed Bronze
NRCR3290dBZ

Gun Metal
NRCR3290dGM

25 YEARS WARRANTY
25
25 YEARS WARRANTY

MECCA CARE
DDA CARE 32MM

Features

- 304 grade stainless steel construction for durability
- Can be used by the toilet or in the shower to help get on and off the toilet or from a shower seat
- Correct size according to AS1428.1 for ambulant toilets
- Approved to AS1428.1 for grab rails by an accredited test lab
- Optional add on toilet roll holder attaches to the 32mm rail 150kg capacity
- Modular design, the rail to be mounted horizontally, vertically or at any angle and cut down to suit your bathroom

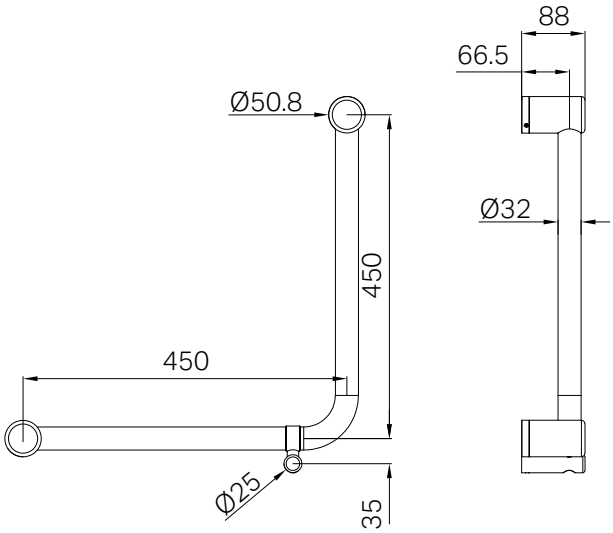

Maintenance And Care

- Regularly check the mixer and connections for signs of wear or leaks.
- Clean the tap with mild soapy water to maintain its appearance, avoiding harsh chemicals and abrasive materials that may damage the finish.

- Dimensions are nominal measurements only.