# VIVID MKII

## VIVID MKII BASIN MIXER - LEAD FREE

SPECIFICATIONS



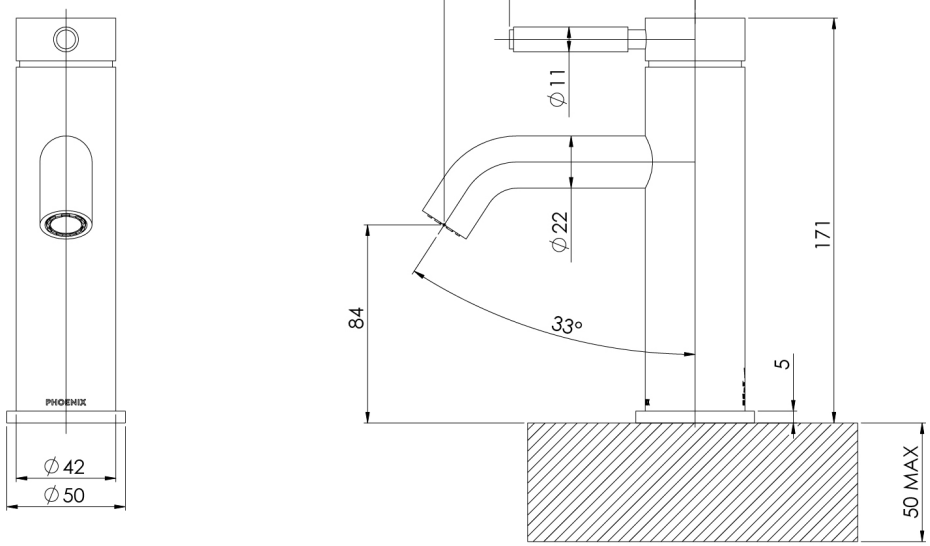


### AVAILABLE IN



146-7700-00-1
Chrome



146-7700-40-1
Brushed Nickel



146-7700-31-1
Brushed Carbon



146-7700-24-1
Brushed Bronze



146-7700-12-1
Brushed Gold

### INFORMATION

Temperature Rating
1 - 55°C

Pressure Rating
150 - 500kPa

Lead Free

WATER RATING
www.waterrating.gov.au
4.5 litres per minute
Licence No. 0133

### MAINTENANCE AND CARE:

- All surfaces should be cleaned with mild liquid detergent or soap and water.
- Do not use cream cleaners or citrus based cleaning products, as they are abrasive.
- Use of unsuitable cleaning agents may damage the surface.
- Any damage caused in this way will not be covered by warranty.

Product complies with the lead free Australian Building Codes Board regulations in 2026

Please visit https://www.phoenixtapware.com.au/warranty to view the full warranty

PHOENIX

While we aim to ensure the specifications shown are correct at time of printing, Phoenix Tapware reserves the right to make modifications without prior notice. Always use the physical product measurements for mark-ups and roughing-in as the line drawing shown may differ from the actual product over time. All measurements are shown in millimetres. Colours may vary from image shown.

Ph: +61 3 9780 4200
02/11/2026
phoenixtapware.com.au