REC-7630

6.2 TON DIELESS COMPRESSION TOOL

Huskie TOOLS
A SPARTACO COMPANY

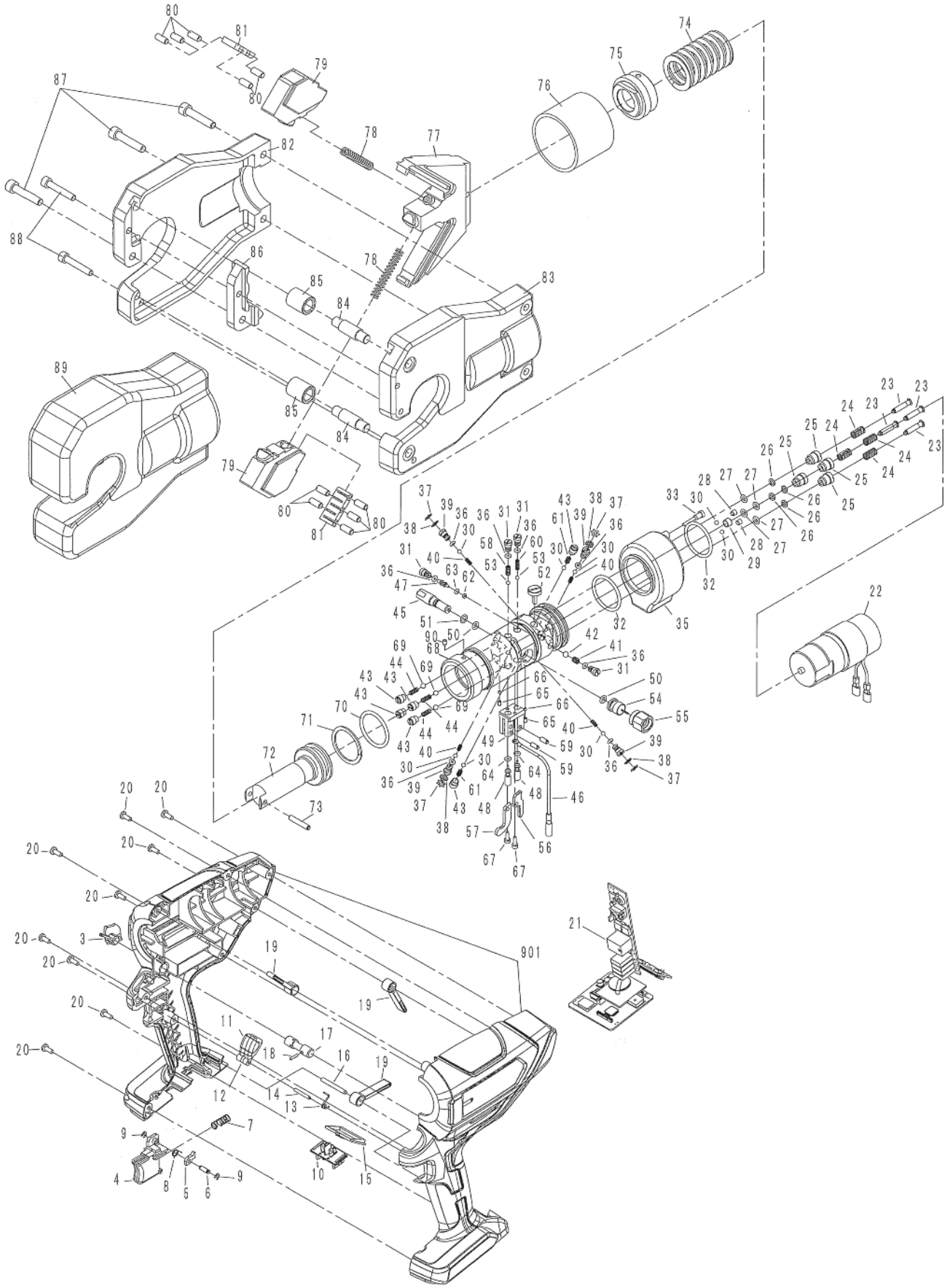

TOOL BREAKDOWN
REC-7630

6.2 TON DIELESS COMPRESSION TOOL

Huskie TOOLS
A SPARTACO COMPANY

NO	DESCRIPTION	CODE	QTY
901	Housing L&R	758-01	1
3	Cover	758-02	1
4	Switch Knob	758-05	1
5	Ratchet	751-06	1
6	Pin(280)	751-08	1
7	Spring (599)	R150-09	1
8	Spring(720)	751-09	1
9	JE-3 Snap Ring	51-39	2
10	Terminal	7ND-04	1
11	Release Knob	751-10	1
12	Support Plate	751-11	1
13	Spring(719)	751-12	1
14	3 x 22 Parallel Pin	ROB-121	1
15	Indication Plate	7ND-03	1
16	M4x35 Parallel pin	7ND-05	1
17	On/Off switch pin	751-13	1
18	3 x 10 Drive Pin (AW)	32-12	1
19	Hanging Strap	558-07A	3
20	M4 x 10 Screw	ROB-159	9
21	Switch Unit (24)S	758-03	1
22	Power Unit	751-15	1
23	Pump Piston	751-16	4
24	Spring(699)	LI200-04	4
25	Cylinder Insert	LI200-05	4
26	P-5 Back-Up Ring (E.L.)	LI200-06	4
27	P-5 O-ring(U565)	LI200-07	4
28	M5 X 5 Screw (F.P.)	510A-05	2
29	Bush	R14A-19	1
30	5/32” Ball	22-21	8
31	Plug	751-17	4
32	G35 O-Ring	658-11	2
33	Plug	SLND-12	1
35	Oil Reservoir(43)	658-01	1
36	P-3 O-Ring (U801)	EZ-21	8
37	SI-9 Ring	751-19	4
38	Filter	751-20	4
39	Suction Plug	751-21	4
40	Spring (688)	EZ-22	4
41	Spring(718)	751-22	1
42	7/32” Ball	16-26	1
43	Valve Screw	EZ-27	6
44	Spring (686)	EZ-26	4
45	Valve Cartridge	751-23D	1
46	Ground Wire	758-06	1
47	KK Stem	751-24	1
48	Stem(1)	751-25	2
49	Lever Retainer	751-26	1
50	P-5 O-Ring (B)	610F-18	2

NO	DESCRIPTION	CODE	QTY
51	S-7 O-Ring	150A-05	1
52	Screw	751-27	1
53	9/64” Ball	751-30	2
54	Pressure sensor	758-07	1
55	Set screw	758-08	1
56	Cam Lever	751-28	1
57	Release Lever	758-04	1
58	Spring (689)	EZ-23	1
59	G4x12 Dowel Pin	658-10	2
60	Spring (77)	16-37	1
61	Spring (68)	26-21	2
62	P-2 Back-Up Ring (B.C.)	RCP-37	1
63	P-2 O-Ring	RCP-38	1
64	P-3 O-Ring	16-36	2
65	M3 X 5 Screw (F.P.)	UC-37A	2
66	Retainer	SLND-14	2
67	M3x10 Screw	658-08	2
68	Body	763-01	1
69	3/16” Ball	16-49	4
70	P-29 O-Ring	16-23	1
71	P-29 Back-Up Ring (B.C.)	16-22	1
72	Ram	763-02	1
73	4x22 Dowel Pin	DCM-05	1
74	Spring(708)	6630-03	1
75	Cam Yoke Holder	6630-04	1
76	Body Insulation	6630-06	1
77	Cam Yoke	6A-09	1
78	Side Jaw Spring	UC-06	2
79	Side Jaw	6A-07F	2
80	Roller	UC-07	10
81	Roller Retainer	UC-08	2
82	Head(1)	763-02	1
83	Tool Cover (B)	6A-10	1
84	Pin (2)	6A-03	2
85	Bushing	6A-04	2
86	Fixed Jaw	UC-03	1
87	M6 X 30 Screw	E3-49	3
88	M5 x 30 Screw	EG-64	2
89	Head Insulation	6A-01	1
90	M4x6 Screw	R5PD-02	1