Button Installations

Custom Buttons - rear access required

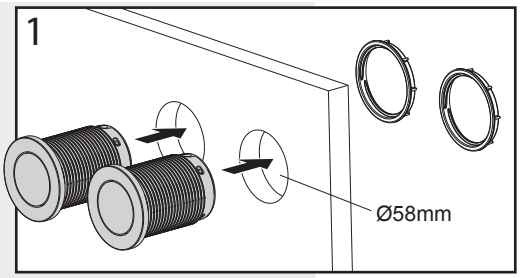

Mark out and drill holes for the Custom Buttons in the desired position. Round buttons require a hole diameter of 58mm and are suitable for panels up to 55mm thick.

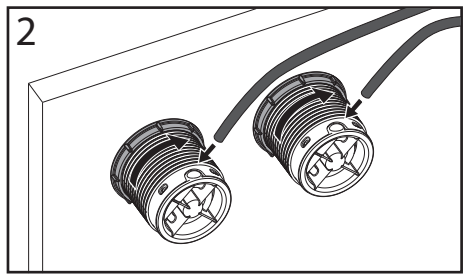

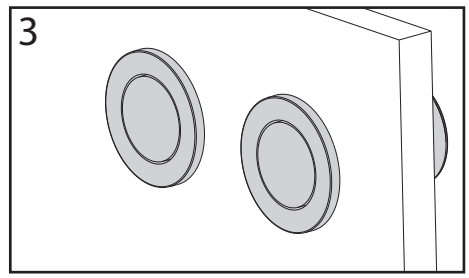

Insert the Button Assembly and tighten Mounting Nut up from behind. Push the hoses into the Button Assemblies ensuring the hoses from the cistern are correctly matched with the half flush and full flush buttons

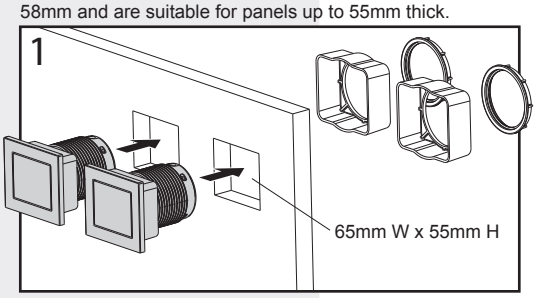

Mark out and drill holes for the Custom Buttons in the desired position. Rectangle buttons require a hole size of 65mm W x 55mm H and are suitable for panels up to 55m thick.

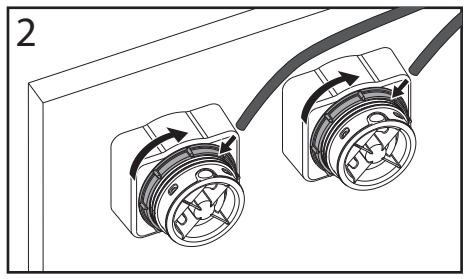

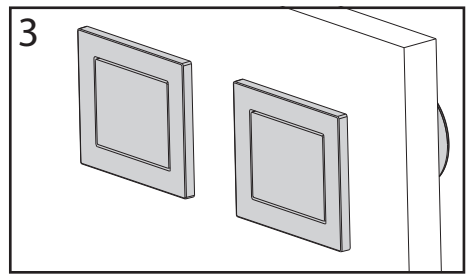

Insert the Button Assembly and tighten Mounting Nut up from behind. Installations where the thickness of the mounting plate is less than 26 mm will require the additional Spacer. Push the hoses into the Button Assemblies ensuring the hoses from the cistern are correctly matched with the half flush and full flush buttons

Button Panels

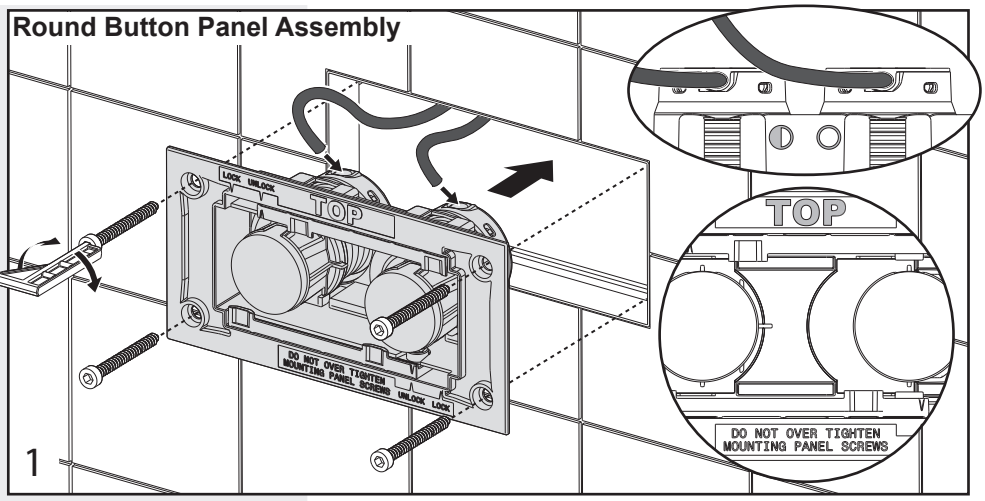

Remove the Face Plate from the assembly and carefully set aside. Push the Pneumatic Hoses into the rear of the Mounting Panel assembly ensuring the correct hose from the cistern is matched with the half flush and full flush buttons. Use the supplied Allen Key and Mounting Panel Screws to fix the assembly to the Tiling Box or Remote Mounting Box. (Note that the Tiling Box or Remote Mounting Box should be trimmed flush to the wall prior to assembly of the buttons.) **Take care not to overtighten Mounting Panel Screws.**

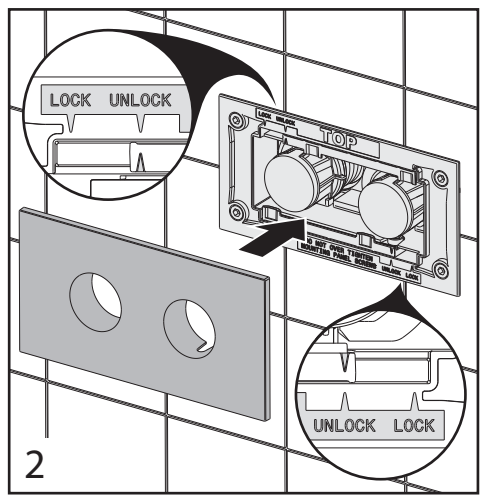

Ensure the Locking Racks are in the 'UNLOCK' position, then assemble the Face Plate to the Mounting Panel

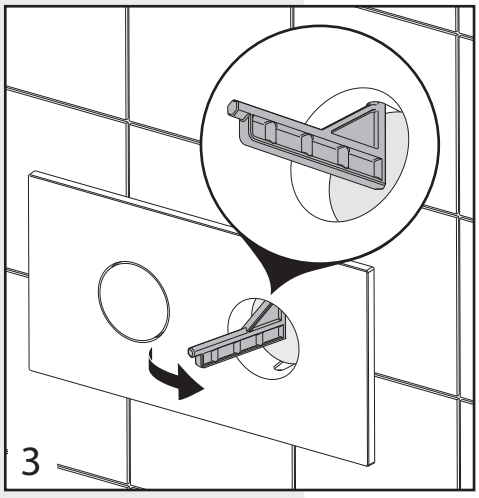

Depress the full flush button and using the supplied Allen Key, lock the Face Plate to the Mounting Panel - there are two locks - top.....

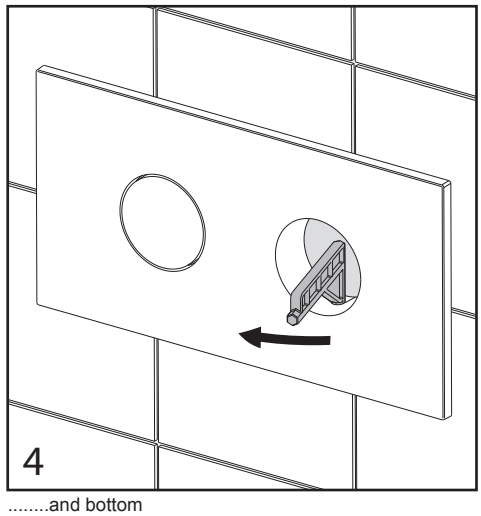

.....and bottom

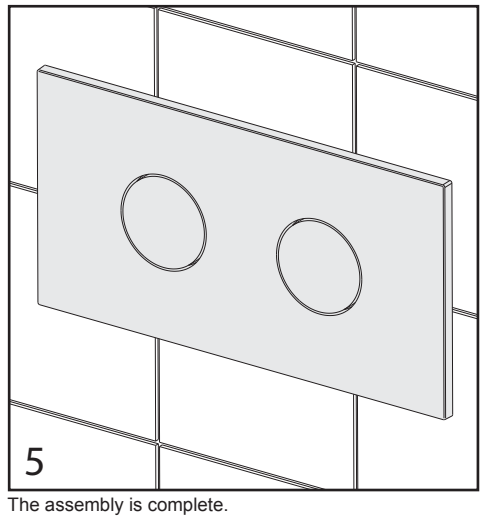

The assembly is complete.

Button Installations

Button Panels (cont.)

Rectangle DF Button Panel Assembly

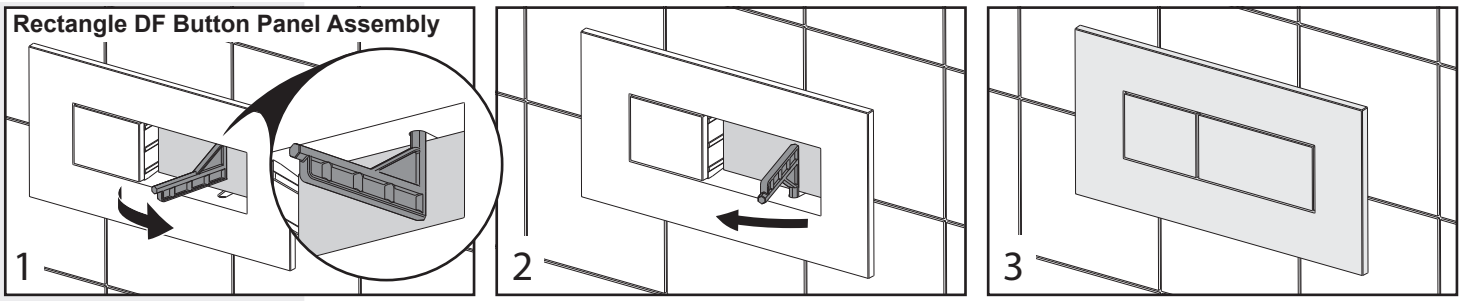

Rectangle SF Button Panel Assembly

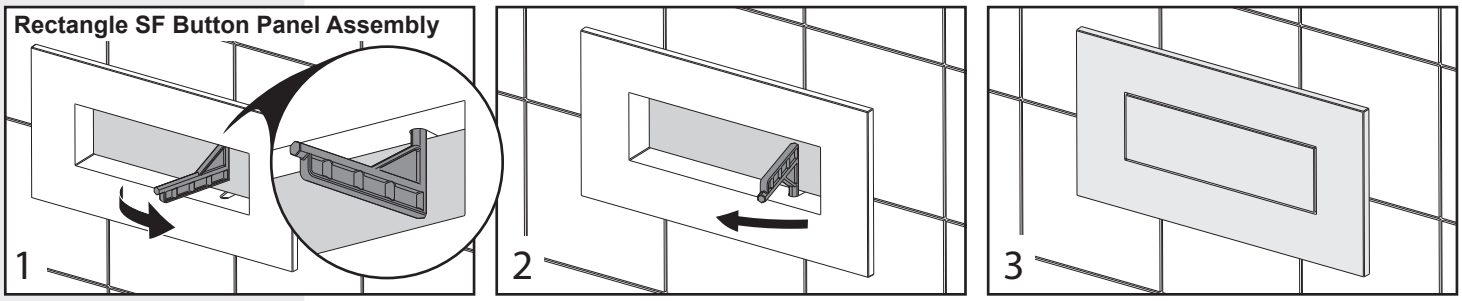

Rectangle Dual and Single Flush Button Panel Assemblies use the same method of installation as the Round Button Panel Assembly

Care Button Panel Assembly

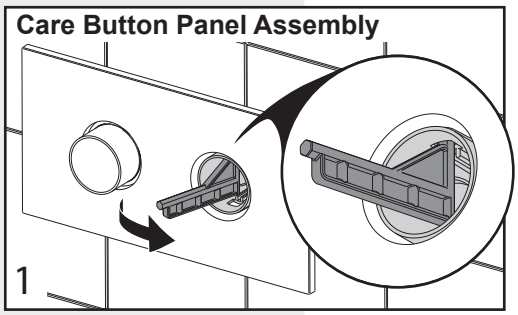

The installation method is identical to the Round Button Panel Assembly except that it will be provided without the button caps attached. To lock the Face Plate, depress the full flush button so the Allen Key can be used through the slot in the button slider - top.....

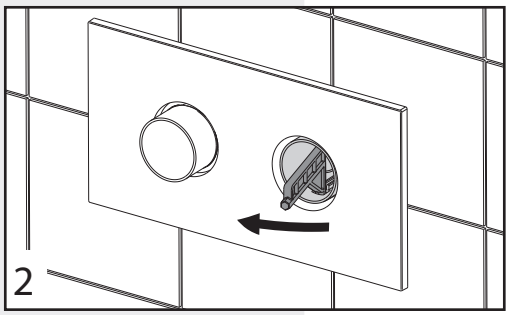

.....and bottom

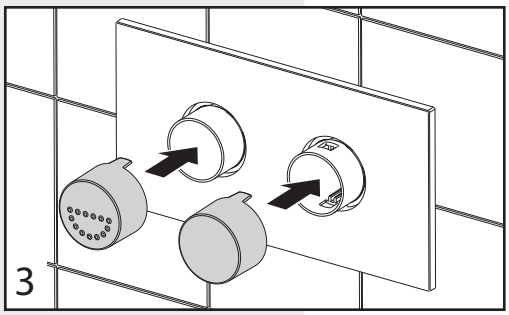

Once the Face Plate has been locked, the Button Caps can be clipped on. Ensure the half flush button cap is on the left.

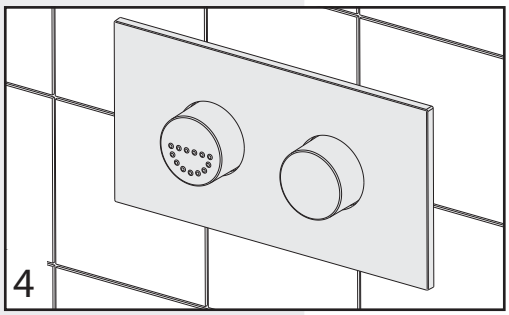

The assembly is complete.

Blanking Panel Assembly

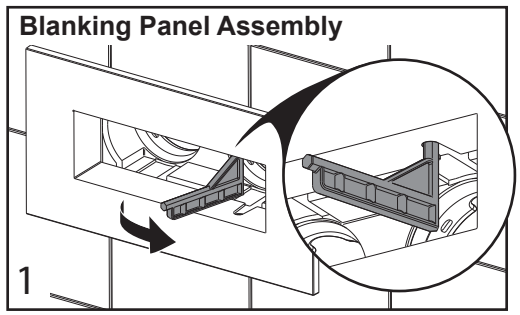

Install the Mounting Panel assembly and Face Plate as previously, using the Allen Key top.....

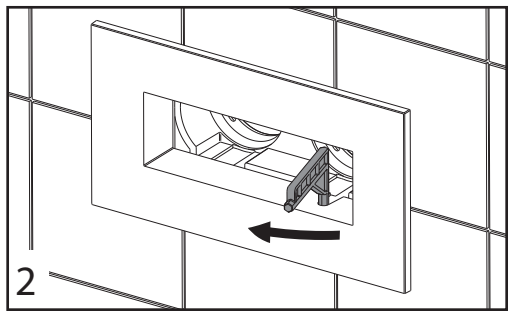

.....and bottom

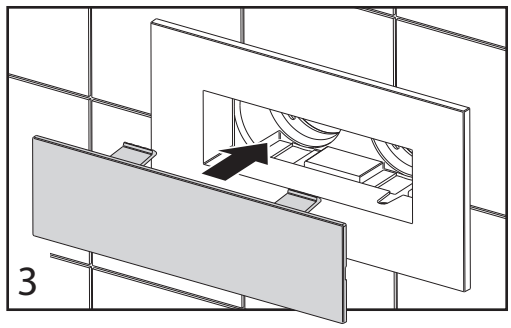

Once the Face Plate has been locked, the Blanking Panel is simply clipped into place.

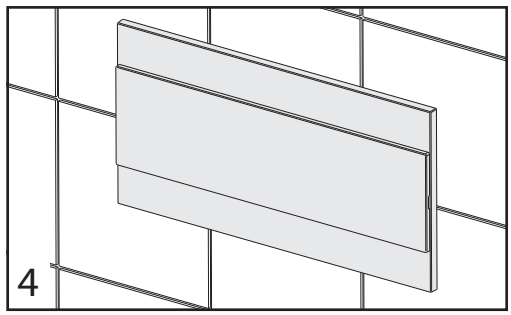

The assembly is complete.