EGLO
my fan | my style

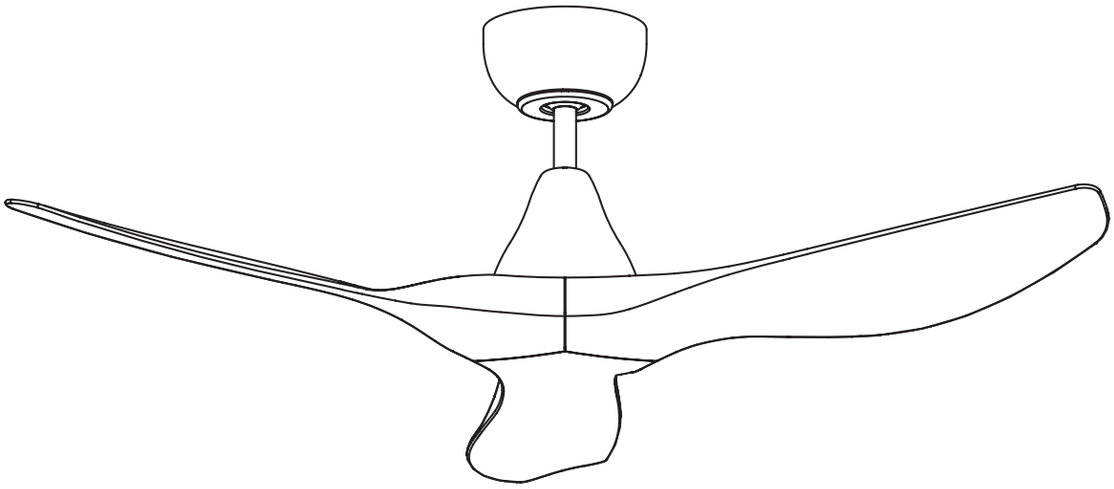

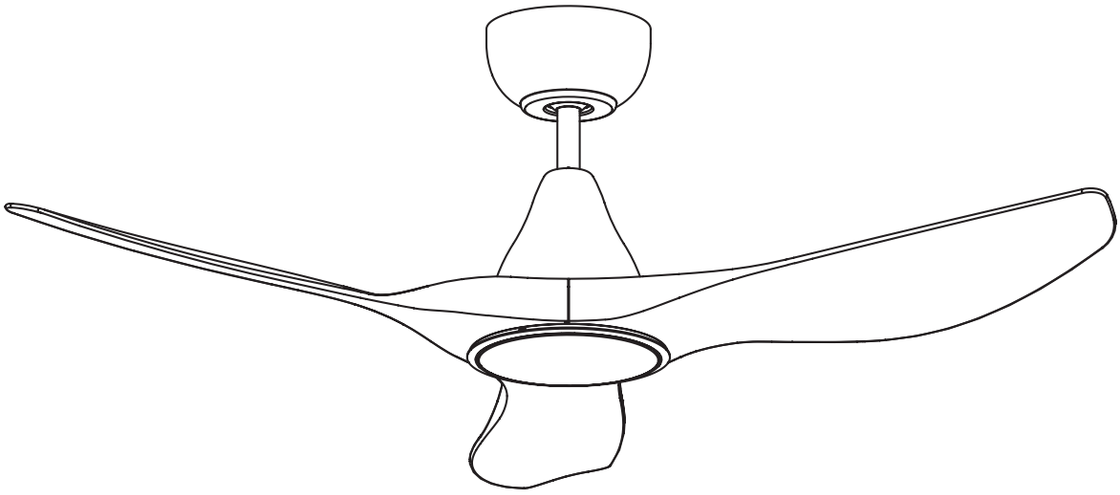

SURF Ceiling Fan
40“: 20789201, 20789202, 20789216, 20789217
48“: 20549601, 20549602, 20549616, 20549617
52“: 20549801, 20549802, 20549816, 20549817
60”: 20550101, 20550102, 20550116, 20550117
72”: 20789401, 20789402, 20789416, 20789417

SURF Ceiling Fan & LED Light
40“: 20789301, 20789302, 20789316, 20789317
48“: 20549701, 20549702, 20549716, 20549717
52“: 20549901, 20549902, 20549916, 20549917
60”: 20550201, 20550202, 20550216, 20550217
72”: 20789501, 20789502, 20789516, 20789517

Smart USB Module
205503 (sold separately)

Installation Manual
Use & Care Guide
Warranty Information

Do not dispose of electrical appliances as unsorted municipal waste, use separate collection facilities. Contact your local council for more information regarding the collection systems available. If electrical appliances are disposed of in landfills or dumps, hazardous substances can leak into the ground water and get into the food chain, damaging your health and well-being.

EGLO Lighting has a policy of continual product improvement and development, dimensions, hardware and designs may change to reflect this policy. EGLO reserves the right to discontinue or change product specifications & designs at any time without notice and without incurring obligations. The images including all features and specifications in this manual are for illustrative purposes only. Product details, images & line drawings may vary depending on specific product models.

TABLE OF CONTENTS

FOR YOUR SAFETY:
WARNING! 4

BEFORE INSTALLATION:
WHAT COMES IN YOUR BOX 5
ACCESSORIES 5
SPECIFICATIONS 5

INSTALLATION:
SELECTING A LOCATION 6
INSTALLING THE MOUNTING BRACKET 6
INSTALLING THE FAN 7

ELECTRICAL CONNECTIOS:
WIRING DIAGRAM 8

BEFORE OPERATION
REMOTE-CONTROL PAIRING 9

OPERATION:
YOUR REMOTE CONTROL 10
REVERSE FUNCTION 10
MAKE YOUR FAN SMART 11

CLEANING & MAINTENANCE:
MAINTENANCE 11
CLEANING 11

TROUBLESHOOTING:
TROUBLESHOOTING 12
TROUBLESHOOTING CHECKLIST 12

WARRANTY:
WARRANTY CLAIMS ON INSTALLED PRODUCTS: 13
1. AUSTRALIAN CONSUMER LAW: 13
2. LIMITED REPAIR / REPLACEMENT WARRANTY: 13
3. IN-HOME WARRANTY: 13
4. WARRANTY TRANSFER: 14
5. WHAT IS NOT COVERED: 14
6. COMMERCIAL USE: 15
7. WARRANTY CONDITIONS: 15
HOW TO MAKE A WARRANTY CLAIM: 15

FOR YOUR SAFETY

Warning!

1. Please read this manual carefully before attempting the assembly or installation of your new ceiling fan.

2. This ceiling fan MUST ONLY be installed by a suitably qualified and licenced electrical contractor.

3. This appliance is not intended for use by persons (including children) with reduced physical, sensory, or mental capabilities, or lack of experience and knowledge, unless they have been given supervision or instruction concerning the use of the appliance by a person responsible for their safety.

4. Do NOT allow children to play with this appliance, and always supervise children around electrical devices.

5. Before commencing any electrical work, ensure the power is disconnected and/or the mains switched off at the circuit box and ensure all pole isolation of the power supply.

6. The fixing point for your ceiling fan must be of sound construction, undamaged, and capable of supporting a load of 35Kg, or 4 times the weight of the fan plus the method of attachment, whichever is greater. Verifying the stability of the mounting structure is the sole responsibility of the consumer and qualified installer.

7. Care needs to be taken to ensure the installation location does not allow the fan blades to come into contact with any object or surface. There must be a minimum of 30 cm clearance between the blade tip (end) and the nearest wall or object. Reduced clearances to walls or ceilings can also reduce the amount of air your fan can move.

8. The installation should must allow for a clearance of 2.1 m between the floor and the bottom of the blades.

9. The installation should allow for a minimum of 3.0 m between ceiling fans.

10. The fan and the hanging bracket must be earthed.

11. The fan must be connected to a mains supply only. Fans connected to alternate power systems such as Solar, Wind, Battery etc will not be covered under the terms of this warranty.

12. Use ONLY the EGLO controller supplied with your fan, or a suitable EGLO controller designed specifically for your fan. Use of nonstandard, non-EGLO or solid-state dimmer type controllers can cause inferior performance, and permanently induce a humming noise in your fan motor which cannot be repaired, and which will not be covered under warranty.

13. Do NOT change the direction of your fan whilst it is spinning. ONLY change the direction after the fan blades have come to a complete stop.

14. Do NOT insert any object into the fan blades whilst in operation, as this can cause damage to the fan, and personal injury.

15. Do NOT use ceiling fans and gas appliances in the same room at the same time.

16. All EGLO products are warranted to be free from defects in workmanship and materials provided the products are used with a voltage supply within the range the product is designed to operate.

17. This fan is designed for use indoors only, though can be installed in suitable undercover and protected outdoor areas.

18. EGLO lighting will not be liable for any advice given to the consumer from any of our suppliers or third parties, related or otherwise.

19. Proper performance relies on the right fan being correctly installed in the optimum location. Fans that do not perform as expected and which are not faulty cannot be replaced or exchanged under warranty.

20. The important safeguards and instructions in this manual are not designed to cover every possible condition or circumstance. It is understood that common sense, caution and care are factors that cannot be built into the product, those using and maintaining this product must supply these factors.

BEFORE INSTALLATION

What Comes In Your Box:

No-Light models

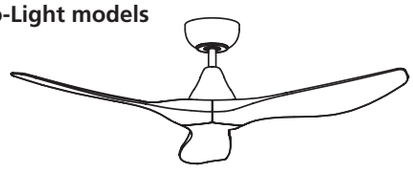

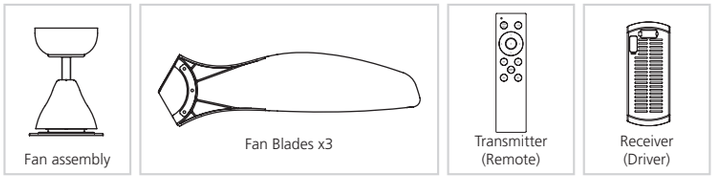

With Light models

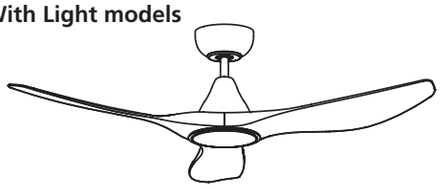

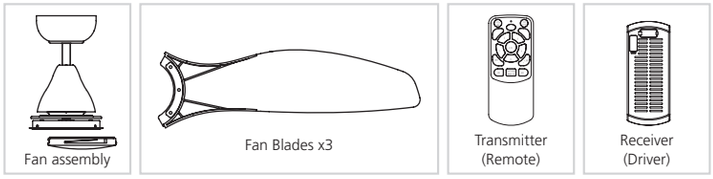

Mutual parts

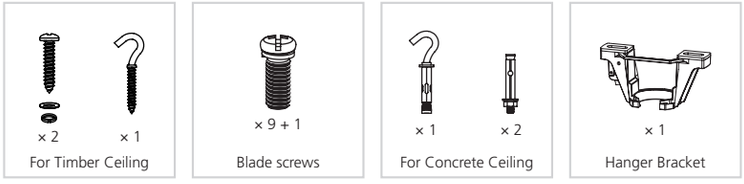

- Carefully unpack your fan on a soft surface to avoid damage to the fan finish.
- Do not lay the motor housing on its side to avoid damage to decorative components.
- Check that all parts are present before commencing assembly. If any parts are missing, check the packaging, and if they cannot be located, contact EGLO for assistance before commencing installation

Accessories (Sold Separately):

RF Wall control: 206222 - Refer to "Remote control Pairing" section.
Handheld remote: 206637 - Refer to "Remote control Pairing" section.
Smart USB module: 205503 - suitable for all SURF models
Downrods: Sold separately in a variety of sizes
Angle Canopy: 20557501 (White), 20557502 (Black), 20557504 (Titanium), 20557512 (ORB)
Note: Angle Canopies will require longer downrods to maintain clearances.

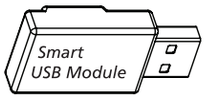

For information on available accessories visit: www.eglo.com/au/ceiling-fans/ceiling-fan-accessories.html

Specifications:

Input: 220 – 240 V ~ 50Hz
Controller: RF remote control with 'Active Dual Pairing'.
(2x RF transmitters/remotes can be connected to the same fan at the same time)
Frequency: 433.92 MHz for handheld remote, 2.4 GHz Wi-Fi & Bluetooth with smart module fit in
Fan Wattage: 30 W – 40", 40 W – for 48", 52", 60",60 W – 72"
Light Wattage: 20 W – for all with LED SKUs
Canopy Angle: max.15° with included standard bracket
Weight: No light models: 40" - 4.3 kg, 48" - 4.23 kg, 52" - 4.35 kg, 60" - 4.8 kg, 72" - 5.9 kg
Weight: LED models: 40" - 4.4 kg, 48" - 4.78 kg, 52" - 4.90 kg, 60" - 5.26 kg, 72" - 6 kg
Dimensions: **40":** Ø 1016 mm, Total Height: 297 mm (no light) / 309 mm (with light)
48": Ø 1220 mm, Total Height: 297 mm (no light) / 309 mm (with light)
52": Ø 1320 mm, Total Height: 295 mm (no light) / 309 mm (with light)
60": Ø 1524 mm, Total Height: 292 mm (no light) / 309 mm (with light)
72": Ø 1828 mm, Total Height: 297 mm (no light) / 309 mm (with light)

INSTALLATION

Selecting A Location

- The ceiling fan must be installed in a location so that the blades are a minimum 30 cm spacing from the tip of the blade, to the nearest objects or walls. (Fig. 1)

- The ceiling fan must be installed in a location so that the blades are a minimum 2.1 m above the floor.

- The fixing point for your ceiling fan must be of sound construction, undamaged, and capable of supporting a load of 35 Kg, or 4 times the weight of the fan plus the method of attachment, whichever is greater. If the location does not have a solid mounting point, you will need to install a timber support between two ceiling joists. (Fig. 2)

- Many EGLO fans are designed for indoor use, though they can also be installed in appropriately covered outdoor locations where the fan is fully undercover with a minimum of 2 walls. This fan is not waterproof. When installed in outdoor areas, the ceiling fan must be installed in a location protected from water, wind, dust, and salt. Exposure to these elements will void the warranty. In some more tropical areas of Australia, it is suggested you increase the distance from the fan to the edge of the roof.

Fig. 1

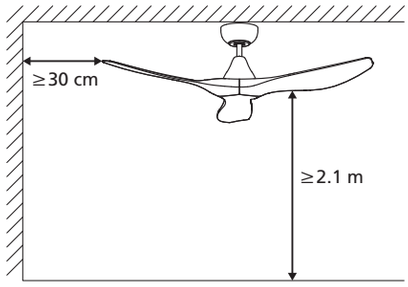

Fig. 2

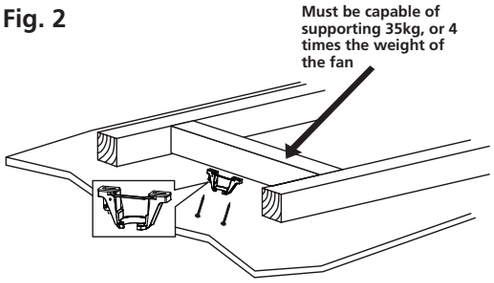

Note: Image is for representation only, and does not represent the actual bracket.

Installing The Mounting Bracket

IMPORTANT: CHECK THAT THE POWER IS DISCONNECTED AND/OR THE MAINS SWITCHED OFF AT THE CIRCUIT BOX TO ENSURE ALL POLE ISOLATION OF THE POWER SUPPLY.

Installing onto Joist or Timber Support:

1. Install the mounting bracket to the ceiling joist or timber support with the long installation screws provided. Pass the screws through the holes in the mounting bracket and secure to the ceiling. (Fig. 3)

2. Install the safety cable screw aside one of the holes in the mounting bracket

3. Ensure that at least 30mm of the screw is threaded into the ceiling joist or timber support.

Fig. 3

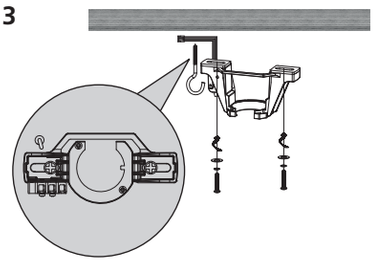

Note: Ensure that the cable entry is positioned within coverage of canopy, and avoid obstructing the receiver.

Installing onto Concrete Ceiling:

1. Install the mounting bracket to the concrete ceiling with expansion bolts. Pass the bolts through the holes in the mounting bracket and secure to the ceiling. (Fig. 4)

2. Install an expansion bolt with hook inside one of the holes in the mounting bracket and secure tightly to enable safety cable connection.

Fig. 4

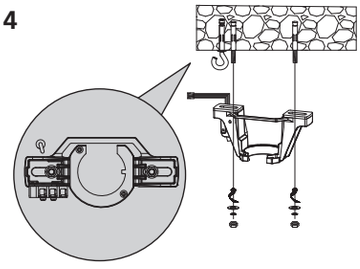

Note: Ensure that the cable entry is positioned within coverage of canopy, and avoid obstructing the receiver.

INSTALLATION

Installing the fan

- **FOR YOUR SAFETY, ALL ELECTRICAL CONNECTIONS MUST ONLY BE UNDERTAKEN BY A QUALIFIED AND LICENCED ELECTRICIAN!**
- **For safe use of ceiling fans fan, an all-pole disconnection MUST be incorporated into the fixed wiring in accordance with the wiring rules, as outlined in clause 7.12.2 of AS/NZS 60335-1 for meeting the minimum electrical safety of this standard.**
- **A single pole isolation switch must be also placed in the same room as the fan as per local wiring regulations AS/NZS 3000, in accordance with clause 2.3.2.2.1& 4.13.1.3 of AS/NZS 3000. If there are two or more ceiling fans installed in the one location/room, an isolation switch is required for EACH celling fan. This is required when programming any remote-control transmitter & receiver to pair together, and for fan servicing.**

1. Take out fan assembly from package **(Fig. 5)**
2. Place the blade into the slot in the motor housing centre band, install and loosely tighten 3 blade screws and washers, and when all blades are installed tighten all screws firmly. **(Fig. 6)**
3. Carefully lift the fan assembly up to the hanging bracket, seat the down rod ball assembly into the bracket, ensuring the notch in the hanger ball is positioned on the stopper of the hanger bracket to prevent the fan from rotating when in operation. **(Fig. 7)**
4. Install the safety wire to the ceiling, the safety wire must be adjusted as short as possible and secured until snug. **(Fig. 7)**
5. Slide the receiver into the hanging bracket, making sure the arrow on the side is facing the ceiling, Wire the ceiling fan in accordance provided and "Wiring Connections". (**Fig .9** – No Light models / **Fig. 10** – with Light models)
6. Raise the canopy up to the hanger bracket, and carefully tuck any cables inside the canopy as you slowly raise it to the ceiling.
7. Fix the canopy to the hanger bracket with the canopy screws provided and attach the canopy ring. **(Fig. 8)**
8. For with light models, fit in light shade by twist lock. **(Fig. 8b)**

Fig. 5

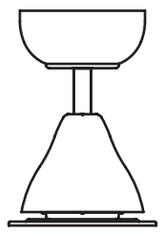

Fig. 6

Fig. 7

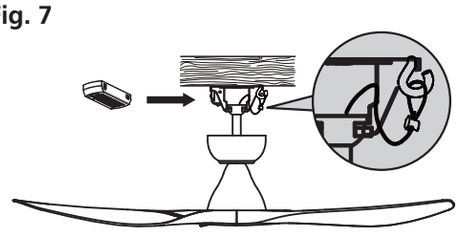

Fig. 8

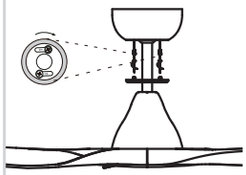

Fig. 8b

(With Light Models)

ELECTRICAL CONNECTIONS

Wiring Diagram

- **For safe use of ceiling fans fan, an all-pole disconnection MUST be incorporated into the fixed wiring in accordance with the wiring rules, as outlined in clause 7.12.2 of AS/NZS 60335-1 for meeting the minimum electrical safety of this standard.**
- **A single pole isolation switch must be also placed in the same room as the fan as per local wiring regulations AS/NZS 3000, in accordance with clause 2.3.2.2.1& 4.13.1.3 of AS/NZS 3000.**
- **If there are two or more ceiling fans installed in the one location/room, an isolation switch is required for EACH celling fan. This is required when programming any remote-control transmitter & receiver to pair together, and for fan servicing.**

Fig. 9
(No Light Models)

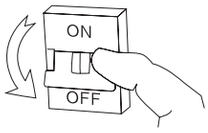

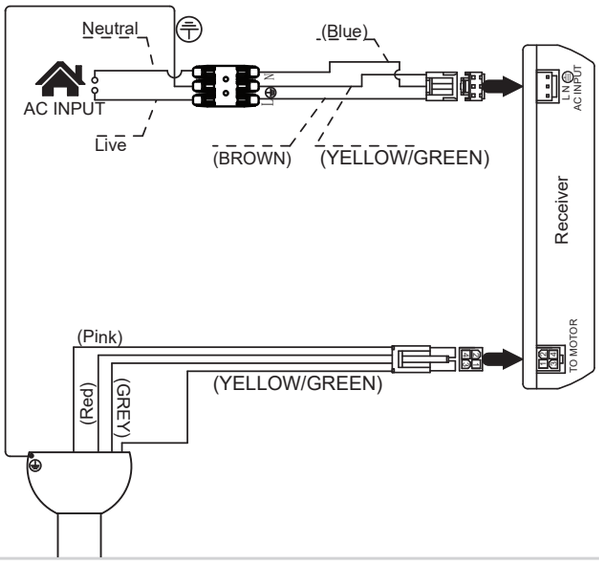

Fig. 10
(with Light Models)

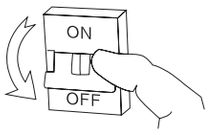

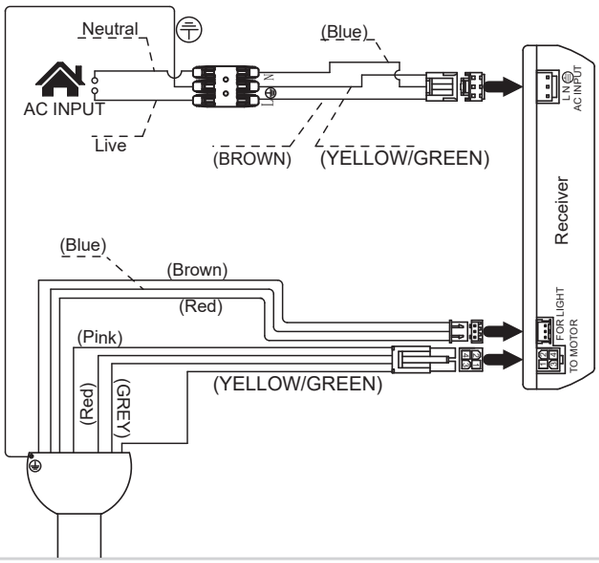

BEFORE OPERATION

Remote Control Pairing

The remote control has been pre-paired with the fan for your convenience, however, should you ever need to replace the remote control or re-pair / re-sync if multiple fans are located within an area, follow these simple steps:

SINGLE FAN INSTALLATION:

1. Connect wiring and switch the power supply ON.
2. Within 30 seconds of the receiver being powered on (connected) aim the transmitter towards the receiver and press "FAN OFF" button for 10 seconds or until a beep sound is heard meaning pairing has been successful.

Note: If the remote does not pair/sync, disconnect power from fan and leave disconnected for 60 seconds, before reconnecting and starting steps 1-3 again. Disconnection from power supply must be for minimum of 60 seconds.

MULTIPLE FAN INSTALLATION:

Important: The pairing/syncing of each fan and remote MUST be done with all other fans disconnected from the power supply.

1. Fan #1 - Connect wiring and switch the power supply ON.
2. Within 30 seconds of the receiver being powered on (connected) aim the transmitter towards the receiver and press "FAN OFF" button for 10 seconds or until a beep sound is heard meaning pairing has been successful.
3. Disconnect fan #1 from the power supply or unplug the receiver to disconnect from terminal block.
4. Repeat steps 1-3 for each subsequent fan, ensuring that each additional fan is disconnected from the power supply before moving on to syncing the next fan.
5. Only once all fans have been paired/synced and successfully tested on separate remote-control transmitters, can all fans then be reconnected to power.

PAIR TWO RF TRANSMITTERS TO ONE SINGLE FAN:

Should you wish to place two RF remotes in different locations for your convenience to operate SAME Fan, follow these steps:

1. Complete First transmitter pairing per above "SINGLE FAN INSTALLATION"
2. Power OFF Fan for more than 10 seconds and repeat "SINGLE FAN INSTALLATION" to pair second remote to same fan.

Note: This is ONLY functional with products that includes"2PD" in date code description on the Receiver's rating label.

REMOVE PAIRED RF TRANSMITTERS FROM FAN:

Should you wish to de-pair RF transmitters from your fan, follow these steps:

1. Power OFF Fan for more than 10 seconds
2. Power UP again and within 5 seconds, Hold Speed 2 for 6 seconds, and fan will emit a beep for 1.5 second to confirm de-pairing is done.

Note: This is ONLY functional with products that includes"2PD" in date code description on the Receiver's rating label. For fans that capable of accepting 2 RF pairings, this operation will clear ALL RF transmitters paired to this fan, follow the instructions above to re-pair fan/s again.

OPERATION

Your Remote Control

Remote for with light models

1. Turns fan OFF
2. Colour Temperature:
   Warm White Neutral White Cool White
3. Fan speed & ON:
   1 Lowest Speed & Night Mode (*)
   2 Low Speed
   3 Medium speed
   4 High speed
   5 Highest speed
4. Increase Brightness (+) / Decrease Brightness (-)
5. Timer:
   2H – Fan turns off after 2 hours
   8H – Fan turns off after 8 hours
6. Turn light ON & OFF
7. Forward / Reverse
8. Natural Breeze

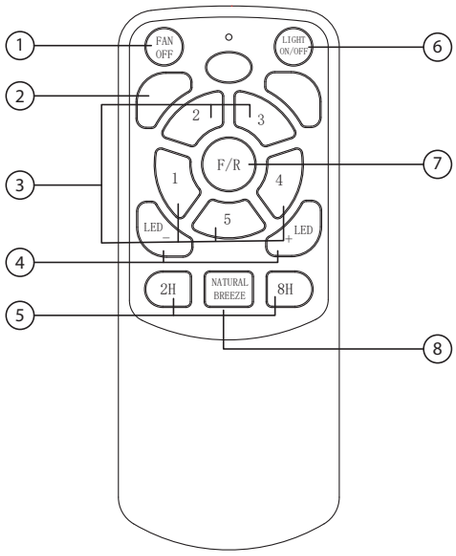

Remote for no light models

1. LED Indicator light
2. Turn the fan ON/OFF
3. Fan speeds & ON (1= Low & Night Mode (*), 5= High)
4. Timer control for the fan
   (30 Min= Fan stops after 30 minute, 8H= Fan stops after 8 Hours)
5. Battery for transmitter (included)
6. Direction of the fan (Forward/Reverse)*

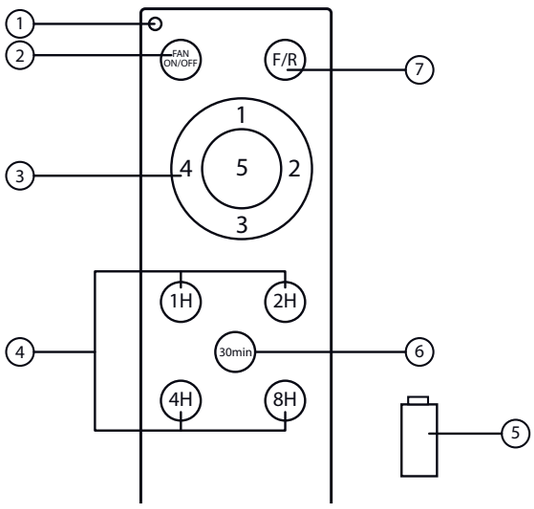

Night mode: Night mode* - Press "1" and hold for 3 seconds to operate. A beep will sound to indicate night mode has been activated.

F/R* - Press "F/R" to operate; a single beep will be heard to indicate the fan is engaging change of direction. The fan will slow and change direction, during which time, the fan speed function is disabled until direction has been changed.

Reverse Function

SUMMER (Forward)

For a cooling effect during summer, your fan should run in a counter-clockwise direction, forcing the room air down and outwards creating a wind chill effect that makes you feel cooler.

WINTER (Reverse)

During the winter, your fan should run in a clockwise direction at low speed. This will gently draw the warmer air down from the ceiling, balancing the rooms temperature, and allowing you to lower your heating thermostat.

MAKE YOUR FAN SMART

my control

In addition to control your fan with included RF handheld remote, with the "my control" Smart USB Module, you can conveniently & easily control your fan remotely via your smart device, as well automation through tasks you set in the "my control" APP.

Setup the USB module

1. Get smart USB module 205503 (sold separately) ready.
2. Disconnect power from your fan.
3. Take off canopy ring & canopy, slide out receiver, remove USB socket cover and plug in the USB module 205503. Slide receiver back to hanger bracket (Refer Fig 11)
4. Raise the canopy up to the hanger bracket, and carefully tuck any cables inside the canopy.
5. Fix the canopy to the hanger bracket with the canopy screws provided and attach the canopy ring.
6. Turn power back on to your fan and hold "8H" button of handheld remote to initialize network setting.
7. Open „MyCotrol" APP on your smart device to complete setup between fan and your network.

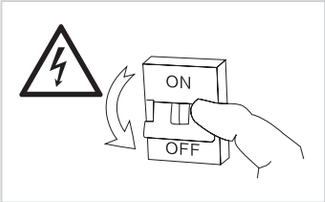

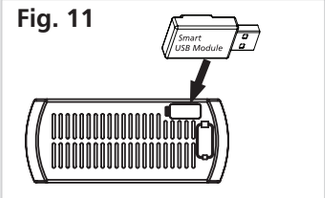

Fig. 11

CLEANING & MAINTENANCE

Maintenance

Your fans natural movement can cause screws to loosen. Every 6 months, check that ALL screws are securely tightened with a screwdriver. All EGLO ventilation products should be cleaned regularly to insure against corrosion from salt, dust and moisture, both externally and internal (where allowed and possible).

Cleaning

All EGLO ventilation products should be cleaned regularly to insure against corrosion from salt, dust and moisture, both externally and internal (where allowed and possible).

All electroplated components have been sealed with a lacquer to minimize discoloration or tarnishing. To avoid scratching these finishes, use only a soft brush or lint-free cloth. For painted finishes, cover any small scratches with a light application of shoe polish in a suitable color.

Do not use water when cleaning. Water can damage the motor or could cause an electrical hazard. Surface smudges or an accumulation of dirt and dust can easily be removed by using only a slightly dampened cloth. Do NOT use abrasive cleaning agents as they may damage the finish.

Troubleshooting

WARNING: CEILING FAN MUST BE SWITCHED OFF AND ISOLATED BEFORE COMMENCING ANY TROUBLE SHOOTING!

WOBBLE / BALANCE:
Please note that all ceiling fans are not the same, even fans of the same model, some may move more or less than others. Movement of a few centimetres is quite acceptable and does not suggest the fan will fall if installed correctly.

All ceiling fan blades are weighed and grouped by weight. It is impossible to eliminate wobble altogether and it should not be considered a fault. Ceiling fans tend to move during operation because they are not rigidly mounted.

To reduce the fan wobble:

- Check that all screws which fix the fan assembly with the mounting bracket are all tightly secured.
- Wobble may result from inconsistent blade level. Check this by measuring from the tip of the blade to the ceiling and repeat on every blade. If the measurements are different:
  1. Check that the blade screws are not overly tightened, or loose, causing difference in blade tip height.
  2. Out of shaped blades can unbalance the fan and cause wobble. Check by removing all blades and stacking on a flat level surface, and ensure all blades are a uniform shape.
  3. Interchanging blades can redistribute the weight and result in smoother operation.

Troubleshooting Checklist

PROBLEM	POSSIBLE CAUSE	POSSIBLE REMEDY
Fan or Light will not start.	Fuse or circuit breaker blown.	**Turn power OFF.** Check circuit fuses and circuit breakers.
	Loose connections to fan.	**Turn power OFF.** Check connections at terminal block.
	Controller/switch issues.	Check that fan controller is in the correct position. For remote controls with Code Pairing Synchronization, re-pair remote transmitter to remote receiver.
Fan Wobbles.	Fan hanger ball not seated correctly in ceiling mounting bracket.	Turn power OFF. Support the fan very carefully and rotate the hanger ball to ensure the notch on the hanger ball engages with the ridge on the mounting bracket.
	Fan blades are not horizontal to the ceiling.	Refer to 'WOBBLE / BALANCING' section of manual.
	Blade screws are loose.	Check that all screws are securely tightened. Do NOT overtighten.
	Fan requires balancing.	Use a Blade Balancing Kit to balance the fan.
Fan sounds noisy.	Top canopy touching ceiling.	Lower the decorative canopy so that it does not contact the ceiling.
	Loose housing screws.	Make sure all motor housing screws are tight.
	Loose blade screws.	Check that all screws are securely tightened. Do NOT overtighten.
	Mounting bracket not installed correctly.	Turn power OFF. Check and if necessary, re-install the ceiling mounting bracket if not installed correctly.
	Incorrect controller.	Turn power OFF. Change the controller to the supplied controller.
	NOTE: When it is quiet at night, you may hear occasional small noises, THIS IS NORMAL! Please allow a 24-hour ‚settling-in' period, as most noises associated with a new fan disappear during this initial period. All electric motors make noise to some extent.	

WARRANTY

Warranty Claims On Installed Products

EGLO Lighting (EGLO) will not be liable for charges incurred by the consumer for rectification, deinstallation or reinstallation unless approved by EGLO management in writing prior to commencing work.

All claims are to be submitted to EGLO Warranty Department with a copy of the original purchase receipt, copy of receipt from installation (incl. electrical contractor licence number), and completed EGLO warranty claims form. Incomplete submission will result in delays processing your claim. Any additional photos, videos or information that can be supplied at the time of submission, will help expedite your claim.

1. Australian Consumer Law

The benefits given to you the consumer in this warranty document are in addition to your other rights and remedies under a law in relation to the products to which this warranty document relates.

"YOUR CONSUMER RIGHTS": Our goods come with guarantees that cannot be excluded under the Australian Consumer Law. You are entitled to a replacement or refund for a major failure and compensation for any other reasonably foreseeable loss or damage. You are also entitled to have the goods repaired or replaced if the goods fail to be of acceptable quality and the failure does not amount to a major failure.

Subject to "Your Consumer Rights" outlined above, but otherwise to the maximum extent permitted by law, EGLO will not be liable for any consequential or indirect loss or damage suffered or incurred by you in relation to an EGLO product including but not limited to loss of use, loss or damage for business interruption, or profits.

2. Limited Repair / Replacement Warranty

EGLO offers the purchaser a repair or replacement of the EGLO product in cases where the product fails due to defective materials or workmanship, when installed and operated under normal domestic conditions, for a period of 6 years (3 years parts & labour + 3 years parts only) from the date of purchase. The RF wall control and accessory handheld remote-control accessory is covered by a 12-month replacement warranty. Please refer to the warranty period listed on each product to determine the warranty period which EGLO grants to the original purchaser of the EGLO product. The warranty period begins from the date of purchase. Also, please refer to WHAT IS NOT COVERED.

You must provide proof of purchase (such as the original dated purchase receipt/invoice) from an authorised EGLO reseller to make a warranty claim. You must also provide a receipt from installation, including the electrical contractors licence number - if an electrical licence number cannot be supplied, your claim will be denied. This warranty will not apply if the ceiling fan is installed by anyone other than a qualified and licensed electrical contractor.

Resetting/Changing of DIP switches in connected remote controls is not covered by warranty and a service call fee WILL apply.
Batteries (if supplied), are done so as a complimentary (free) item only and are not covered by warranty.

REPAIRS / REPLACEMENTS
EGLO products presented for repair may be replaced by refurbished goods of the same type rather than being repaired at the discretion of EGLO. Refurbished parts may be used to repair the goods to proper order.

BALANCE OF WARRANTY
To the maximum extent permitted by law, any product replaced, repaired or refurbished by EGLO is covered only by the balance of the warranty period remaining from the date of original purchase of the original EGLO product.

3. In-Home Warranty

PLEASE KEEP THE PRODUCT INSTALLED FOR WARRANTY TROUBLESHOOTING & RECTIFICATION BY EGLO.
NOTE: EACH FAN OR FANS MUST HAVE AN INDIVIDUAL ALL POLE DISCONNECTION (ISOLATION/WALL SWITCH) PER FAN.

In addition to the limited warranty terms set out under section (2) above, the in-home warranty applies for the first 3 years from the date of original purchase, to all ceiling fans which are hard wired to the electricity supply at residential premises and are required to be installed by a licensed electrician.

3. In-Home Warranty (Continued)

Where a consumer asserts that a product installed in-home is faulty, and an EGLO service agent attends the property, A SERVICE CALL FEE WILL BE CHARGED TO THE CONSUMER IF:

1. The product is deemed to be a non-EGLO product.
2. There is nothing wrong with the EGLO product or to the extent that the failure is not a failure of the product to perform in accordance with its published features and specifications as reasonably determined by EGLO.
3. The fault is deemed to be with a non EGLO branded or supplied control, and not the EGLO ceiling fan.
4. The original installation of the EGLO product was not carried out by a qualified and licensed electrician.
5. The installation is not performed in accordance with the relevant EGLO product installation instructions and all relevant local legislation, regulation and by-laws.
6. The defects have been caused by incorrect installation, application, operation, abuse or misuse by the consumer of the EGLO product.
7. In cases of in-home repair/replacements in areas outside the coverage of EGLO service agents, EGLO will reimburse customers a standard fee of $110.00 (Inc. GST) for using their own electrician. To the maximum extent permitted by law, in cases where the installed product is outside the coverage of EGLO service agents, EGLO reserves the right to request a different electrician attend to the service call, if there is reasonable expectation that the fault may be the result of something other than the EGLO product.
8. BEFORE CALLING YOUR ELECTRICIAN, contact EGLO to make a service request with the EGLO warranty department and obtain an Warranty Claim Number. Reimbursements will not be made for call-out fees or other costs without prior approval in writing of the EGLO warranty department.
9. The cost of repairs and/or service call where the fault is due to the installation and not due to faulty materials or manufacturing workmanship, will be payable by the consumer.
10. In the circumstances where an emergency has arisen out of normal business hours and the EGLO warranty department cannot be contacted to dispatch a service agent to the premises, EGLO will reimburse customers their reasonable costs (as determined by EGLO) for using their own electrician.
    Note: An emergency is only considered where the product is presenting an immediate & present danger. Products that have simply stopped working, or a not operating sufficiently, DO NOT constitute an emergency.
11. Failure in part of the consumer to pay for the service call in case of any of the above, will result in the balance of the warranty being void, until all outstanding amount including taxes and costs have been recovered in full.

4. Warranty Transfer

If the ownership changes on the dwelling/premises where the EGLO product is installed, the balance of the warranty period passes to the new owner provided the original proof of purchase (such as the original dated purchase receipt) from an authorised EGLO retailer is retained by the new owner. In addition, proof of installation & licence number of the original installing electrician must be retained.

5. What Is Not Covered

Subject to "Your Consumer Rights", but otherwise to the maximum extent permitted by law, the EGLO warranties provided in this document will not cover the following:

1. EGLO products that are not purchased from an authorised reseller in Australia and installed in Australia.
2. Where installation was not carried out by a qualified and licensed electrical contractor or where a valid Electrical Safety Certificate cannot be presented.
3. EGLO products not installed in accordance with the product's installation instructions or specifications.
4. EGLO products not operated in accordance with the instructions for use, or specifications.
5. EGLO products that have been modified in any manner, painted or used with non-standard blades, controllers (Including capacitors), or mountings.
6. Changes to the painted or plated finishes of the ceiling fan motor or blades due to climate conditions (moisture, salt, dust, etc), or after 12 months from the date of original purchase.
7. Defect, damage of failure to an EGLO product resulting from misuse, accident, neglect, abuse, tampering, modifications or unauthorized repairs of any kind by any person.
8. Damages not caused by a fault in the EGLO product materials or workmanship.
9. Defect, damage or failure to an EGLO product resulting from any acts of God, including damages from lightning, power grid fluctuations, or power surges.
10. Replacement of light sources (globes, LED boards, etc) unless specified.
11. Replacement of batteries supplied with certain products. balance of the warranty being void, until all outstanding amount including taxes and costs have been recovered in full.

12. Power supply “noise”, intermittent “humming”, or other influences from mains power delivery infrastructure. Signals sent through the power grid by the electricity provider for the control of off-peak hot water, streetlights and other devices may cause an intermittent humming noise in your EGLO product. Filters for blocking & reducing such signals are available in Australia at the customer’s expense. These noises do not indicate the EGLO product is faulty.
13. Damage caused by alternative power systems. (for example: ‘off grid’ etc.)
14. Water damage of any kind caused by inappropriate placement of ceiling fans not IP rated for that location.
15. The cost of renting, obtaining and using special access equipment (i.e. scaffoldings, scissor lifts, etc.) for accessing products installed at a height of greater than 3.0 metres.
16. Travel costs incurred by EGLO personnel or service agents travelling greater than 50 Km from an EGLO service agent base. The purchaser must meet these travel costs.
17. Transportation and in-transit insurance costs, if the product or parts thereof have to be returned for repair or replacement to the retailer or the authorised service agent.
18. Non-structural corrosion damage of components such as surface rust or minor rust.
19. Except in the case of pre-packed integrated light models, light fittings attached to the fan are not covered by this warranty. Where the fan is pre-packed complete with a light, the light fitting will be covered by LIMITED REPAIR / REPLACEMENT WARRANTY.
20. Faults deemed caused by a lack of regular maintenance, e.g. screws and nuts becoming loose.

6. Commercial Use

EGLO products which are specifically designed for commercial use are designated as Commercial Use Products on the product packaging.

All other EGLO products are designed for domestic use only. This fan is not designed or warranted for commercial applications unless authorised in writing by an EGLO representative.

7. Warranty Conditions

1. This warranty is for 240V 50Hz products originally purchased in and installed in Australia ONLY.
2. Installation must be performed by a qualified and licensed electrician. The warranty will not apply if the product is installed by anyone other than a qualified and licensed electrician.
3. Problems arising from incorrect installation are not covered by warranty.
4. The cost of repairs and/or service call arising from incorrect installation, not due to faulty material or workmanship in accordance with the EGLO warranty, will be payable by the purchaser.
5. This warranty is only valid for appliances used according to the manufacturer’s instructions.
6. The manufacturer does not accept liability for any direct or consequential damage, loss or other expense arising from misuse or incorrect installation and operation of the appliance.
7. Warranty will only be provided where proof of qualified electrical installation is provided. E.g. Electrical Safety Certificate.
8. Warranty will not be provided if installation is without an all-pole disconnection incorporated in the fixed wiring in accordance with the wiring rules.
9. The manufacturer will not accept in home expenses unless authorisation is granted prior to work commencing, and a Warranty Claim Number allocated by EGLO.
10. Where a service call is undertaken and no fault is found with the ceiling fan, or where the fault is not covered under the terms of this warranty, a call-out fee may be charged.

How To Make A Warranty Claim

To make a warranty claim or seek assistance with this product, scan this QR code, and follow the link to:
https://www.eglo.com/au/warranty-and-product-support

EGLO
my fan | my style

EGLO LIGHTING AUSTRALIA
5/339 Archerfield Road
Richlands
Queensland 4077
www.eglo.com.au

ver:0325