

Amaroo Small Rectangle

PRODUCT CODE
EQXIAM3-W

INSTALLATION TYPE
Above counter

COLOUR & FINISH
Matte white

MATERIAL
Vitreous China

OVERFLOW
Without overflow

WASTE
32mm waste (not included)

WARRANTY
5 years manufacturer's warranty

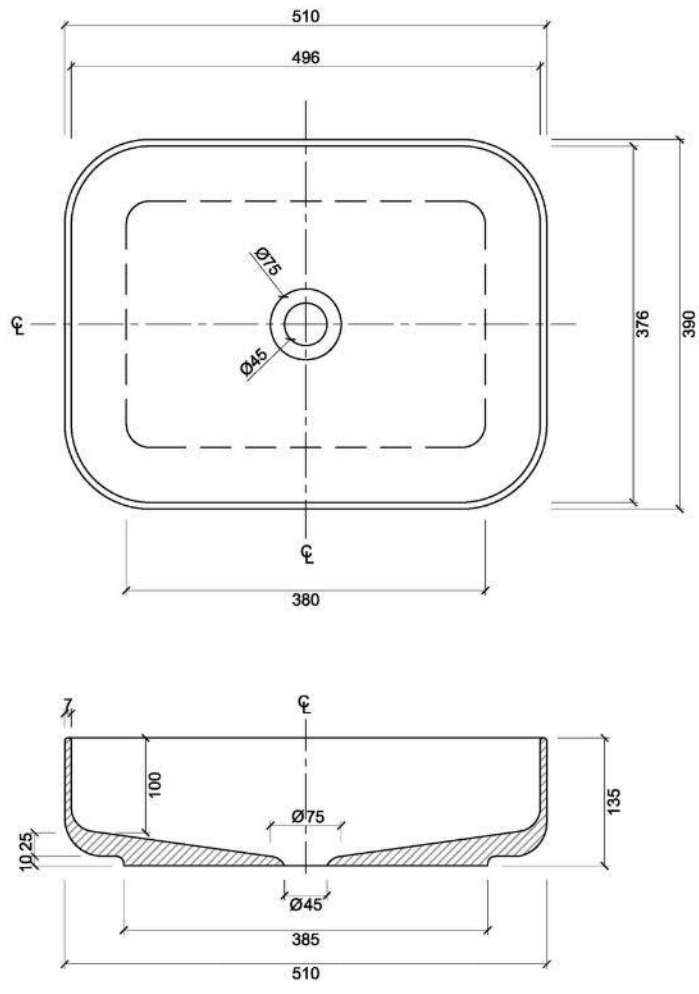

www.eightquarters.com.au

All dimensions are in millimetres and subject to normal manufacturing variations