Sanctuary
DC 52"

The Sanctuary 52 is the solid timber ceiling fan for bedrooms, covered outdoor areas and coastal environments.

Matte Black
Natural Blades



No Light
F6000/219B
CCT LED
F6001/219B



Matte Black
Teak Blades



No Light
F6000/218B
CCT LED
F6001/218B



Matte White
Whitewash Blades



No Light
F6000/120B
CCT LED
F6001/120B



Matte White
Natural Blades

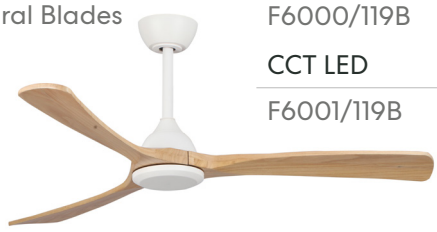

No Light
F6000/119B
CCT LED
F6001/119B



Matte White
Teak Blades



No Light
F6000/118B
CCT LED
F6001/118B





Technical Data

* All outdoor fans must be an enclosed outdoor area min 1.5m from edge of eave/roof, fully shielded from wind, rain & direct sunlight.

Install Location:	Indoor / Outdoor* & Coastal
Motor Type:	DC
Blade Material:	Solid Timber
Reversible:	Yes
Mount Angle:	0-15˚
Blade Pitch:	12˚ (Approx)
Timer:	1, 4, 8 Hour

Performance

Speed	Wattage	RPM	Airflow
1	1.7	61	3,556
2	3.3	86	4,599
3	6.2	112	5,939
4	11.2	137	6,809
5	19.3	162	7,878
6	29.2	182	9,037

Control Options

Remote:

Supplied with no beep remote control.
Remote frequency: 433 MHz

Remote + **SMART** Module:

F9990/000A SMART Module.
Allows fan to be controlled by app, & remote control in tandem.





About the CCT LED Light



3000k	4000k	6000k
2102 Lumens	1959 Lumens	1956 Lumens

Light Type:	LED (20w)
Dimmable:	Yes (Stepless)

FCSP13-FM012 User Replaceable LED Light Panel. Plug in LED panel can be replaced without an electrician.

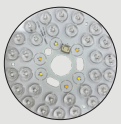

CCT & Dimming level memory, turn your fan off / on and the same light settings will be retained

Dimensions

No Light

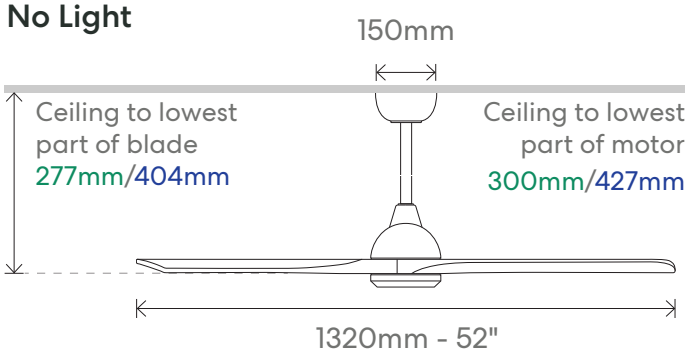

CCT LED Light

Supplied with 2 extension rods
127mm / 254mm

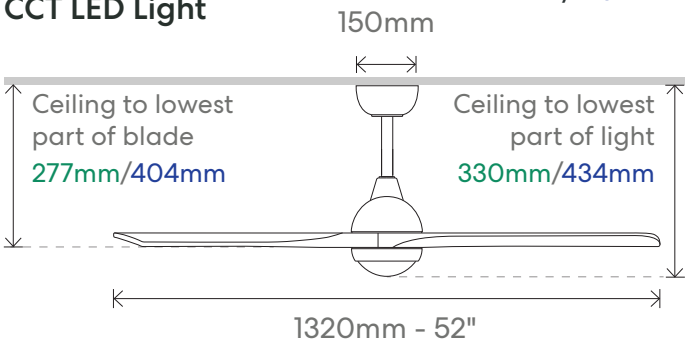

Extension Rods - CCT LED or No Light

Matte White		Matte Black	
K701M/106A	600mm	K701M/206A	600mm
K701M/109A	900mm	K701M/209A	900mm
K701M/115A	1500mm	K701M/215A	1500mm

Anti-corrosive paint applied on all metal components & waterproof sealer on solid timber blades

Sanctuary
DC 70"

A stunning centrepiece fan ideal for any open plan areas and covered outdoor space.

Featuring large, solid timber blades, it elevates both aesthetics and comfort.

Matte Black
Natural Blades



No Light
KF6010/219B
CCT LED
KF6011/219B



Matte Black
Teak Blades



No Light
KF6010/218B
CCT LED
KF6011/218B



Matte White
Whitewash Blades



No Light
KF6010/101B
CCT LED
KF6011/101B



Matte White
Natural Blades



No Light
KF6010/119B
CCT LED
KF6011/219B



Matte White
Teak Blades



No Light
KF6010/118B
CCT LED
KF6011/118B



Matte Black
Black Blades



No Light
KF6010/202B
CCT LED
KF6011/202B





Technical Data

* All outdoor fans must be an enclosed outdoor area min 1.5m from edge of eave/roof, fully shielded from wind, rain & direct sunlight.

Install Location:	Indoor / Outdoor* & Coastal
Motor Type:	DC
Blade Material:	Solid Timber
Reversible:	Yes
Mount Angle:	0-15˚
Blade Pitch:	12˚ (Approx)
Timer:	1, 4, 8 Hour

Control Options

Remote:

Supplied with no beep remote control.
Remote frequency: 433 MHz

Remote + **SMART** Module:

F9990/000A SMART Module.
Allows fan to be controlled by app, & remote control in tandem.



Performance

Speed	Wattage	RPM	Airflow
1	4	57	4,972
2	7.3	79	6,230
3	10.7	93	7,727
4	17.5	112	9,100
5	27.4	130	10,318
6	39.7	148	11,371



About the CCT LED Light

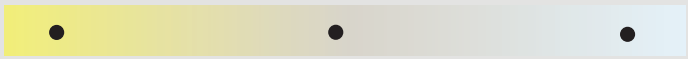

3000k
2102 Lumens

4000k
1959 Lumens

6000k
1956 Lumens

Light Type:	LED (20w)
Dimmable:	Yes (Stepless)

FCSP13-FM012 User Replaceable LED Light Panel. Plug in LED panel can be replaced without an electrician.

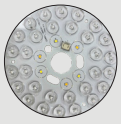

CCT & Dimming level memory, turn your fan off / on and the same light settings will be retained

Dimensions

Supplied with 2 extension rods
127mm 254mm

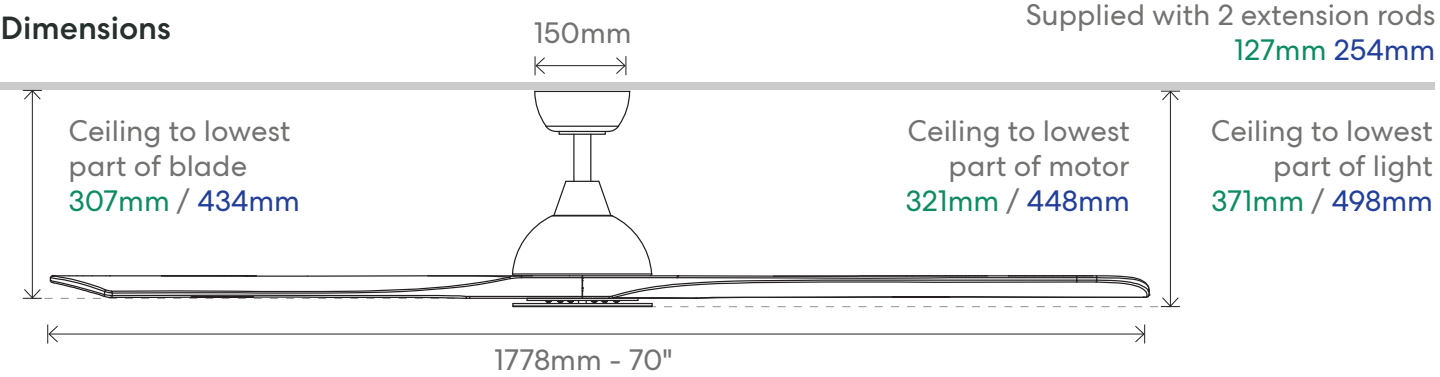

Extension Rods - CCT LED or No Light

Matte White	
K701M/106A	600mm
K701M/109A	900mm
K701M/115A	1500mm

Matte Black	
K701M/206A	600mm
K701M/209A	900mm
K701M/215A	1500mm

Anti-corrosive paint applied on all metal components & waterproof sealer on solid timber blades

Sanctuary XL DC

Bringing the timeless beauty of solid timber to a luxurious scale, the Sanctuary XL elevates ceiling fan elegance and functionality to new scene-stealing heights.

Matte Black
Natural Blades



No Light	
KF6020/219B	86"
KF6030/219B	92"
CCT LED	
KF6021/219B	86"
KF6031/219B	92"

Matte Black
Teak Blades



No Light	
KF6020/218B	86"
KF6030/218B	92"
CCT LED	
KF6021/218B	86"
KF6031/218B	92"

Matte White
Whitewash Blades



No Light	
KF6020/101B	86"
KF6030/101B	92"
CCT LED	
KF6021/101B	86"
KF6031/101B	92"

Matte White
Natural Blades



No Light	
KF6020/119B	86"
KF6030/119B	92"
CCT LED	
KF6021/119B	86"
KF6031/119B	92"

Matte White
Teak Blades



No Light	
KF6020/118B	86"
KF6030/118B	92"
CCT LED	
KF6021/118B	86"
KF6031/118B	92"

Matte Black
Black Blades



No Light	
KF6020/202B	86"
KF6030/202B	92"
CCT LED	
KF6021/202B	86"
KF6031/202B	92"



Technical Data

* All outdoor fans must be an enclosed outdoor area min 1.5m from edge of eave/roof, fully shielded from wind, rain & direct sunlight.

Install Location:	Indoor / Outdoor* & Coastal
Motor Type:	DC
Blade Material:	Solid Timber
Reversible:	Yes
Mount Angle:	0-15˚
Blade Pitch:	12˚ (Approx)
Timer:	1, 4, 8 Hour

Control Options

Remote:

Supplied with no beep remote control.
Remote frequency: 433 MHz

Remote + **SMART** Module:

F9990/000A SMART Module.
Allows fan to be controlled by app, & remote control in tandem.



Performance 86"

Speed	Wattage	RPM	Airflow
1	6.6	60	5,932
2	10.4	72	7,372
3	15.7	84	8,859
4	22.6	96	10,312
5	31.5	108	11,491
6	52.1	128	13,684

Performance 92"

Speed	Wattage	RPM	Airflow
1	8.2	60	7,118
2	12.8	7286	8,846
3	19.4	84	10,630
4	28.1	96	12,374
5	39.2	107	14,789
6	52.6	118	16,235

About the CCT LED Light

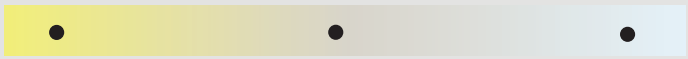

3000k
2102 Lumens

4000k
1959 Lumens

6000k
1956 Lumens

Light Type:	LED (20w)
Dimmable:	Yes (Stepless)

FCSP13-FM012 User Replaceable LED Light Panel. Plug in LED panel can be replaced without an electrician.

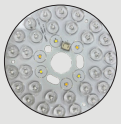

CCT & Dimming level memory, turn your fan off / on and the same light settings will be retained

Dimensions

Supplied with a 250mm rod which results in larger than average ceiling to blade drop.

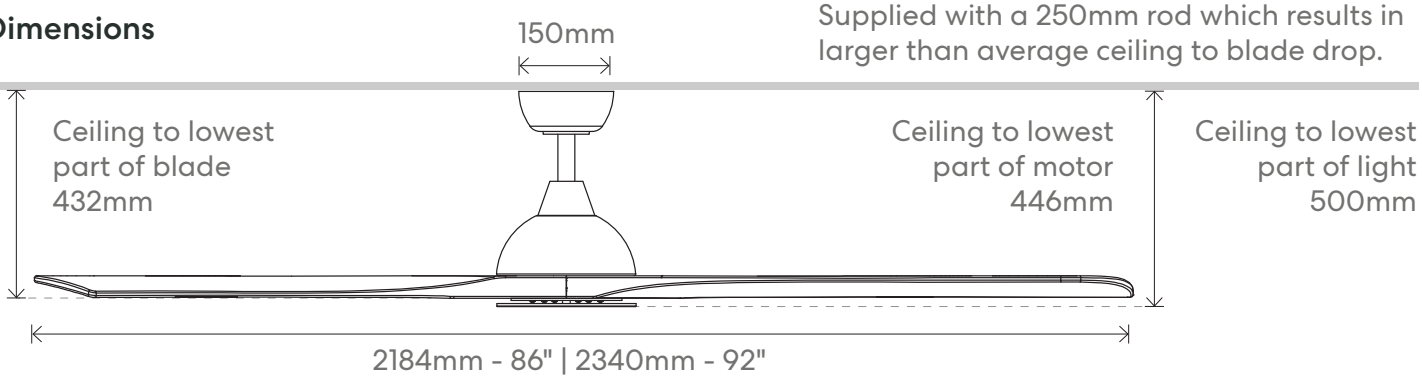

Extension Rods - CCT LED or No Light

Matte White	
K701M/106A	600mm
K701M/109A	900mm
K701M/115A	1500mm

Matte Black	
K701M/206A	600mm
K701M/209A	900mm
K701M/215A	1500mm

Anti-corrosive paint applied on all metal components & waterproof sealer on solid timber blades