meir.

SHOWER
INSTALLATION GUIDE

Version 1. 2022.

WELCOME

Thank you for purchasing one of our premium showers. Before installing these products, please read these instructions carefully. This Installation Guide contains information for safe use, installation and maintenance. Meir does not accept responsibility for any damages due to not observing these instructions. If you have any questions regarding our products, please contact us at:

sales@meir.com.au

CONTENTS

WELCOME 2

CONTENTS 3

PRECAUTIONS FOR INSTALLATION 4

WARRANTY 5

TWIN SHOWER 6

SHOWER COLUMN 10

WALL SHOWER 14

CLEANING 15

PRECAUTIONS FOR INSTALLATION

- Installation must only be completed by a licensed plumber or tradesperson.
- When installing products, all pipes must be flushed clean before installation.
- The water pressure must be tested. Where the water pressure exceeds 500Kpa, an approved pressure reducing valve should be fitted.
- Always fit isolating taps to the hot and cold inlet connections in accordance with the Australian national plumbing code AS3500.
- Ensure the hoses are not twisted or stretched, are not under tension and not bent to a radius less than 25mm when being installed.
- If the water temperature exceeds 75°C, an approved water tempering valve must be fitted.
- For domestic use only.
- The plumber or tradesperson must generate a certificate or official statement showing the work and tests completed. This certificate or receipt must be kept and provided to Meir during any warranty claim request.
- Follow the 'Care and Cleaning' guide on: **meir.com.au/pages/warranty**
- Failure to comply with all the above instructions will void all warranties.

WARRANTY

THE WARRANTY WILL BE VOIDED DUE TO:

- Normal and fair wear and tear, misuse, abuse, or mishap.
- The exposure to excessive moisture derived from lack of ventilation.
- The inability to provide proof of purchase.
- Products not installed by a licensed tradesperson, failure to follow installation instructions or damage which arises from or during installation.
- Scratches or damage caused by applying physical and or abrasive contact directly to the product.
- The product being damaged by accident or neglect.
- Incorrect use of the product in accordance with any applicable Instruction Guides.
- The purchaser attempting to modify or repair the product.
- Full Warranty and Terms & Conditions can be viewed at: **meir.com.au/meir-australia-warranty/**

TWIN SHOWER

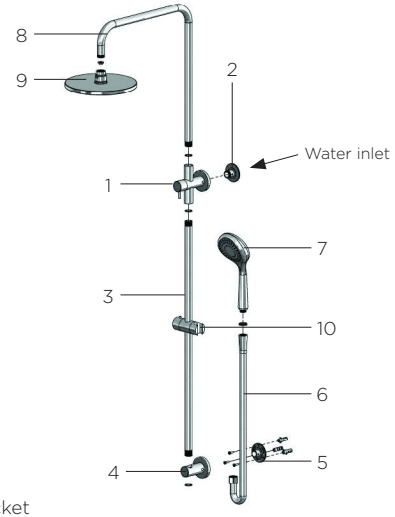

1. Diverter body
2. Inlet fitting
3. Bottom rail
4. Bottom bracket
5. Bottom mounting bracket
6. Shower hose
7. Hand shower
8. Top arm
9. Shower rose
10. Hand shower bracket

INSTALLATION INSTRUCTIONS

1. Determine the desired height from the finished floor to the G 1/2" outlet (this is done at the rough-in stage before finishing the wall).
2. Measure the location of the bottom mount from the top outlet location (the bottom bracket is adjustable as per **Fig. A**) drill out the mounting holes and install the bottom mounting bracket (part 5).
3. Screw the shower inlet fitting (part 2) to the exposed G 1/2" fitting (as per **Fig. B.**) now install the top arm (part 8) and bottom rail (part 3) into the diverter body (part 1) as per **Fig. B.**
4. Slide the bottom bracket (part 4) over the rail, now place the diverter body onto the inlet fitting (part 2) and adjust the bottom bracket to meet the bottom mounting bracket (part 5) once both the top and bottom mounts are correct, tighten the mounting bracket grub screws as per **Fig. C.**
5. Attach the hand shower (part 7) and shower hose (part 6) to the bracket (part 10) as per **Fig. D.**

TWIN SHOWER (CONTINUED)

Fig. A

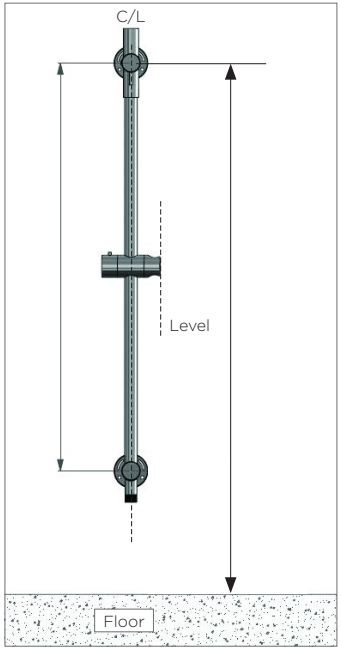

Fig. B

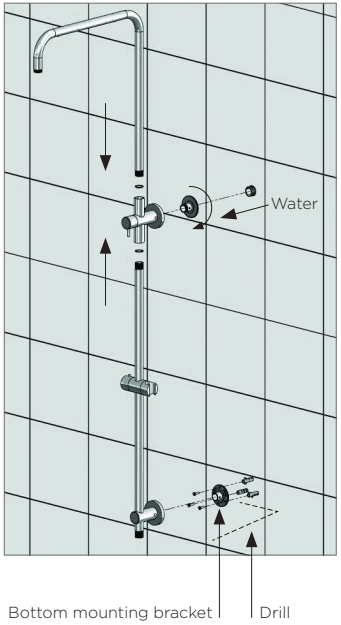

Fig. C

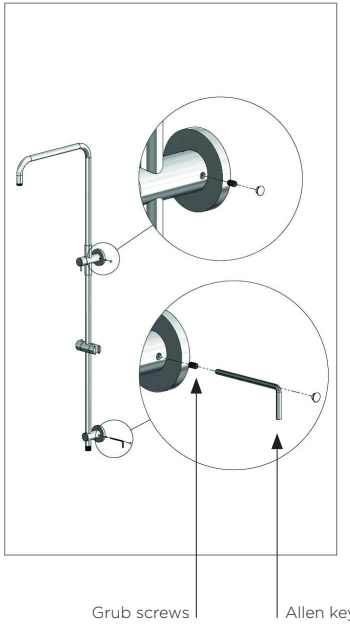

Fig. D

SHOWER COLUMN

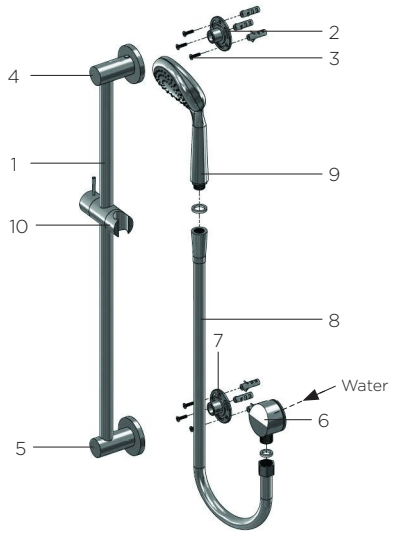

1. Body
2. Top mounting bracket
3. Screw
4. Top bracket
5. Bottom bracket
6. Elbow
7. Bottom mounting bracket
8. Shower hose
9. Hand shower
10. Hand shower bracket

INSTALLATION INSTRUCTIONS

1. Determine the desired height from the finished floor to the G1/2B outlet for the inlet elbow (this is done at the rough-in stage before finishing the wall).
2. Measure the location of the bottom and top mount location as per **Fig. A**, drill out the mounting holes and install the bottom and top mounting bracket (part 7 and part 2) as per **Fig. B.**
3. Attach the bottom and top mounts to the mounting brackets that are installed on the wall and tighten the grub screws, as per **Fig. C.**
4. Attach the hand shower (part 9) and shower hose (part 8) to the bracket (part 10).

SHOWER COLUMN (CONTINUED)

Fig. A

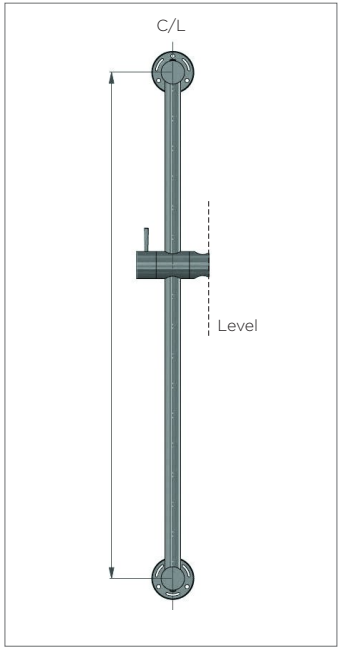

Fig. B

Fig. C

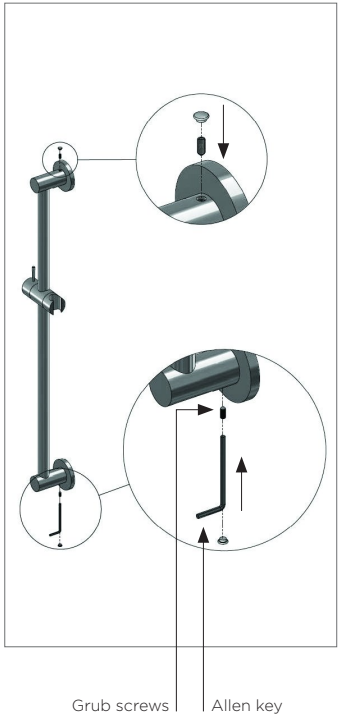

Fig. D

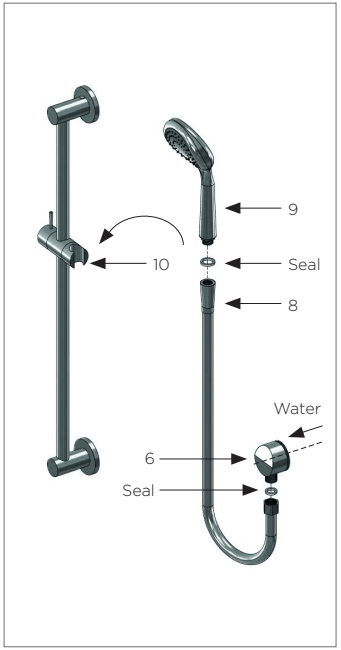

WALL SHOWER

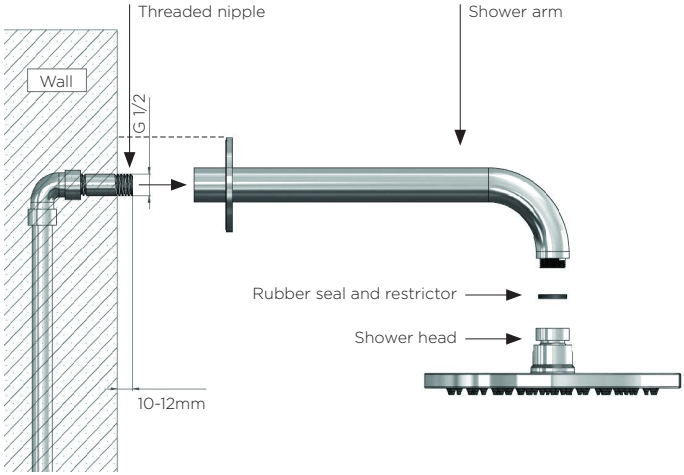

INSTALLATION INSTRUCTIONS

1. Check that the G 1/2" thread is the correct length. Cut to length if required ensuring the shower arm will finish flush with the wall. Apply thread tape (if required).
2. Slide the back plate over the shower arm (before screwing the arm onto the thread).
3. By hand, screw the shower arm onto the G 1/2" thread ensuring that when it finishes it is level and at the correct end position.
4. Attach the shower head, ensuring the rubber seal and flow restrictor is installed (these may be loose in the box).

   IMPORTANT: No tools are to be applied to the shower arm directly.

CLEANING

- Do not install the tapware using any form of acetone silicones.
- Do not apply physical items (such as tools) directly to the product.
- Never use detergents, acidic based, or abrasive cleaners and do not use undue pressure.
- A soft cloth can be used to remove surface dust. Alternatively, wipe with warm soapy water to ensure the finish remains in a superior condition for continued use.
- The use of wax-based furniture products should be avoided. These can result in a build-up of deposits that can detract from the appearance of the product.

CONTACT

P: 1800 012 122
P: +61 3 8678 1722 (international)
E: sales@meir.com.au

meir.