MZ0704
SHOWER RAIL SET

meir®

FEATURES

- Refer to the Meir website for warranty terms & conditions, and available finishes.
- Flow rate 9 L p/m at 3 bar pressure.
- European components and cartridge
- Solid brass construction
- Box Weight 5.5 kg
- 68mm long 1/2" threaded adapter included for non-AU regions only

CARE

- Do not install tapware using any form of acetone silicones.
- Do not apply physical items (such as tools) directly to product.
- Never use house-hold or commercial detergents, citrus based cleaners, or abrasive cleaners.
- Clean using a mild washing soap solution rinsed, and dry with a soft cloth.
- Check for any product defects before installation.
- Refer to the installation manual for correct installation.

CREDENTIALS

- Watermark AS/NZS3718WMKA25013
- 3-star WELS rated
- 9 litres p/minute
- WELS registration No: S18062

SPECIFICATIONS

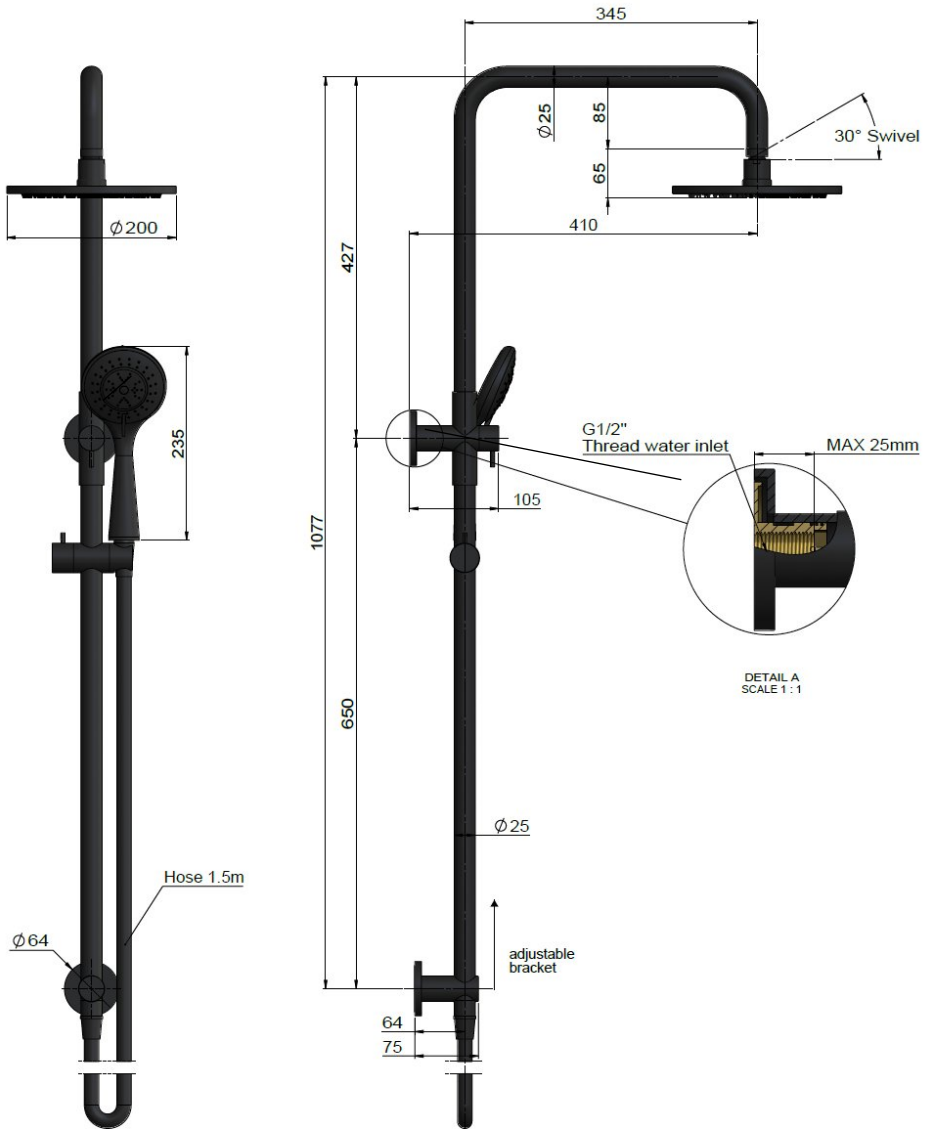

FLOW RATE GRAPH

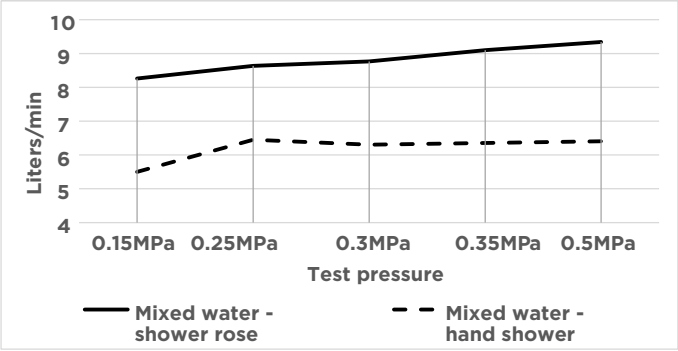

TOLERANCES

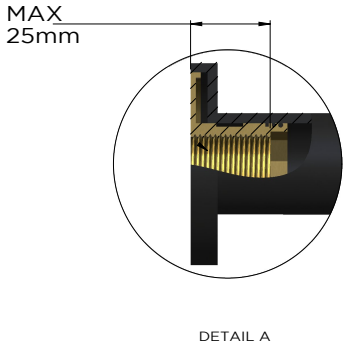

MZ0704
SHOWER RAIL SET

meir®

EXPLODED VIEW

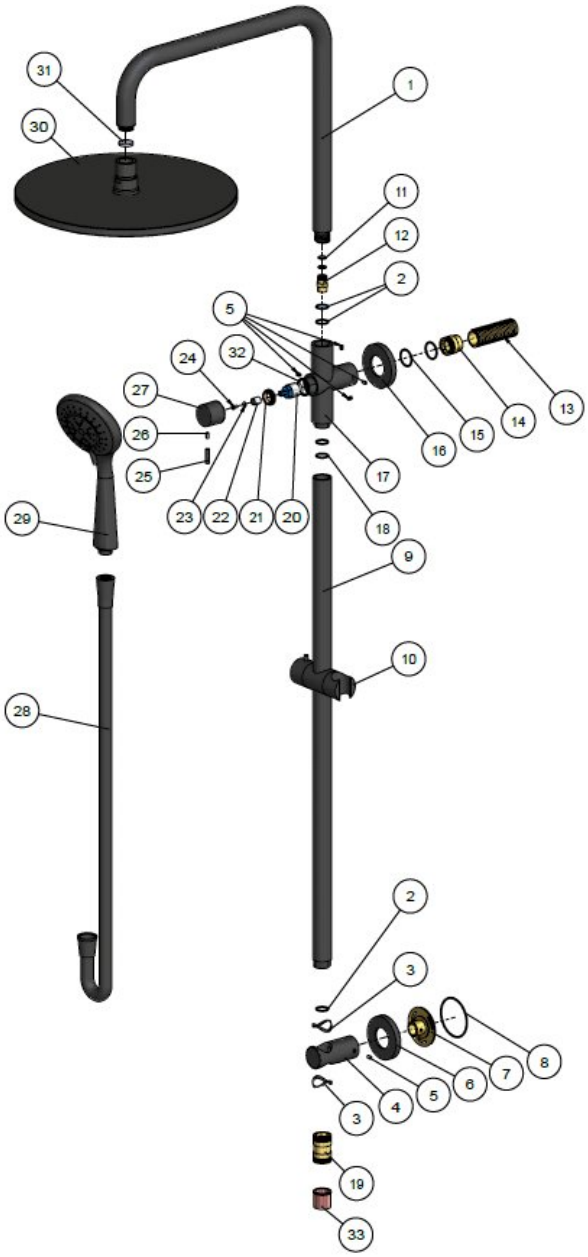

No.	Part Name
1	Pipe
2	O-ring
3	Plastic Protection Ring
4	Retaining Bracket
5	Screw
6	Cover
7	Fixed Base
8	O-ring
9	Pipe
10	Sliding Bracket
11	O-ring
12	Connector
13	Threaded Adapter
14	Water Inlet Connector
15	O-Ring
16	Cover
17	Body
18	O-Ring
19	Connector
20	Diverter Cartridge
21	Nut
22	Connector
23	Washer
24	Screw
25	Handle Pin Lever
26	Screw
27	Handle
28	Shower Hose
29	Handle Shower
30	Shower Rose
31	Flow Controller
32	Wearing Ring
33	Check Valve

[redacted] 13 is for non-AU regions only