meir.

DOOR HARDWARE

Version 1. 2026.

WELCOME

Thank you for purchasing our door hardware products. This instruction booklet will offer guidance for simple installation of the different products in the range. Meir does not accept responsibility for any damages caused by not following these instructions. If you have any questions regarding our products, please contact us at:

sales@meir.com.au

CONTENTS

WELCOME **01**

CONTENTS **02**

PRECAUTIONS FOR INSTALLATION **03**

INSTALLATION INSTRUCTIONS **03**

WARRANTY 21

CLEANING 21

PRECAUTIONS FOR INSTALLATION

1. This instruction booklet does not replace the need to use a qualified installer when installing the door hardware.
2. Make sure the installation dimensions, such as door thickness and hole dimensions, are checked prior to installation. Refer to the on-line datasheets for product dimensions and features.

INCLUDED IN THE BOX

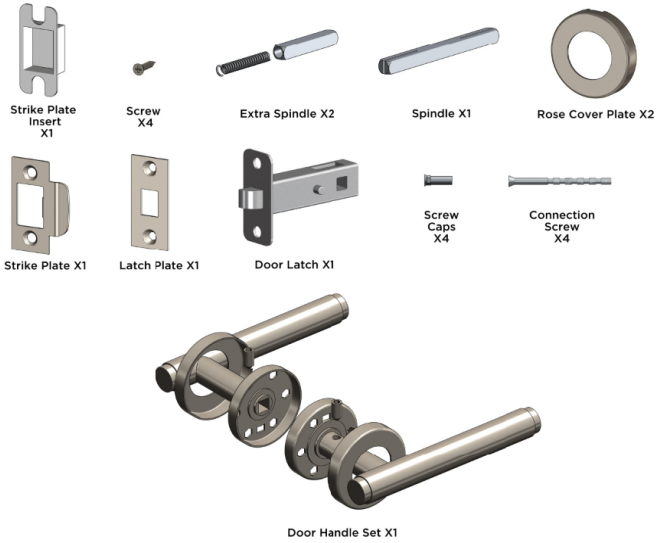

INSTALLATION INFORMATION - Passage Lever

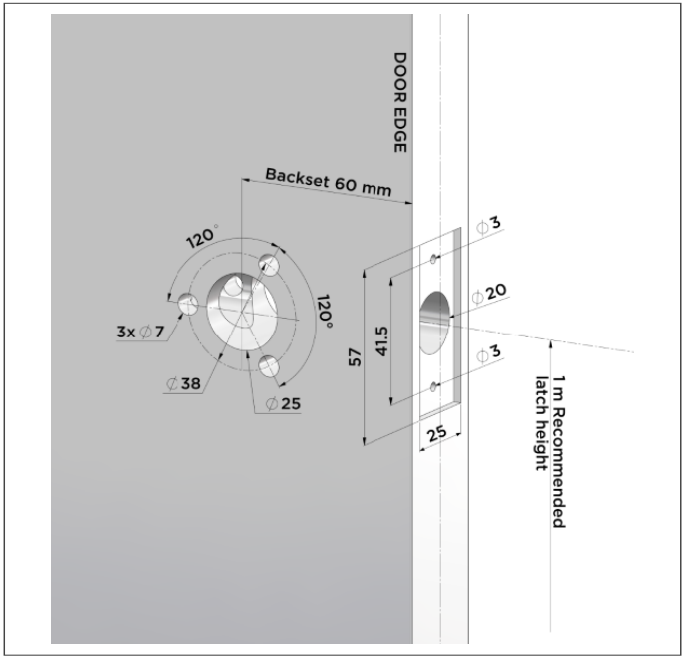

Use the dimensions above to mark the drill holes for the latch components and fixing screws.

The door thickness tolerance is 35mm to 45mm

INSTALLATION INFORMATION - Passage Lever

1. Once the door holes are drilled, insert the latch and screw the latch cover in place. Take note of the door opening direction in relation to the latch angle.

2. Insert the solid spindle in through either side of the door till it appears equally on the other side.

3. With the grub screw holes facing downwards, Insert the lever handles to each side of the spindle, then fasten the rose plates to both door faces using the connecting screws and fastening caps.
   NOTE: the connecting screws can be cut shorter for thinner door sizes. Door size tolerance is 35mm to 45mm.

4. Push the rose cover plates flush against the door face. These are secured in place using a push fit.

INSTALLATION INFORMATION - Passage Lever

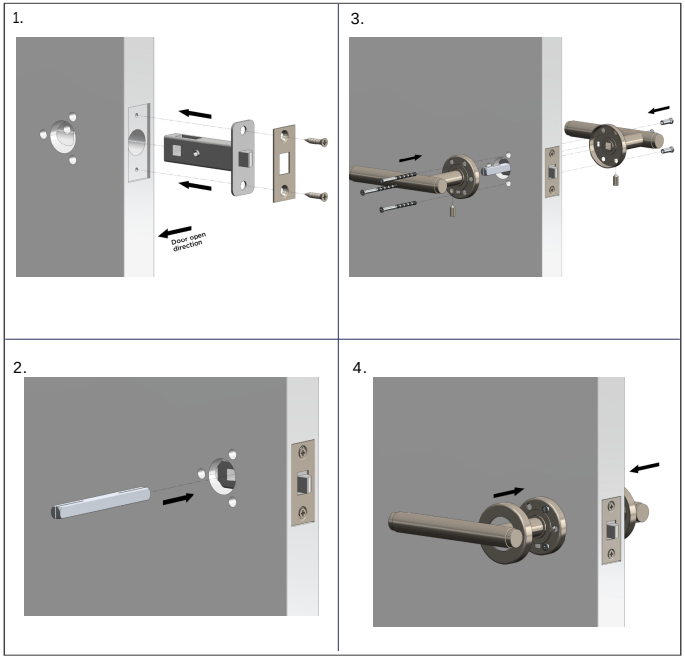

INSTALLATION INFORMATION - Passage Lever

5. Use the correct dimensions to install the strike plate components into the door catch. Ensure the cut-out centre line height is the same as the door latch.

INSTALLATION INFORMATION - Passage Lever

5.

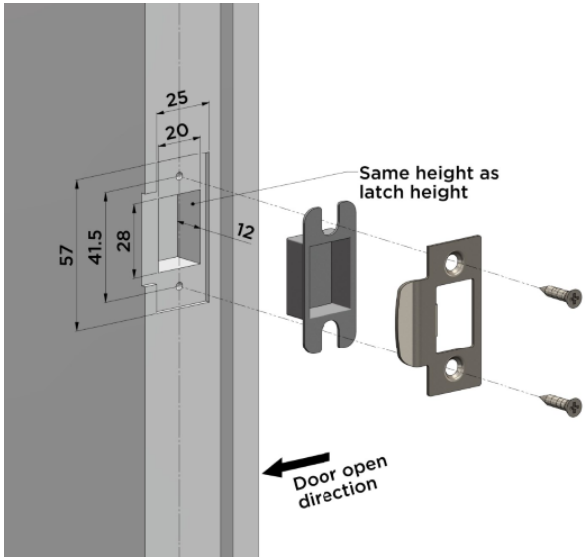

INSTALLATION INFORMATION - Privacy Lever

The privacy lever handle door cut-out is the same as the passage lever handle, other than adding an additional hole for the pin lock.

INSTALLATION INFORMATION - Privacy Lever

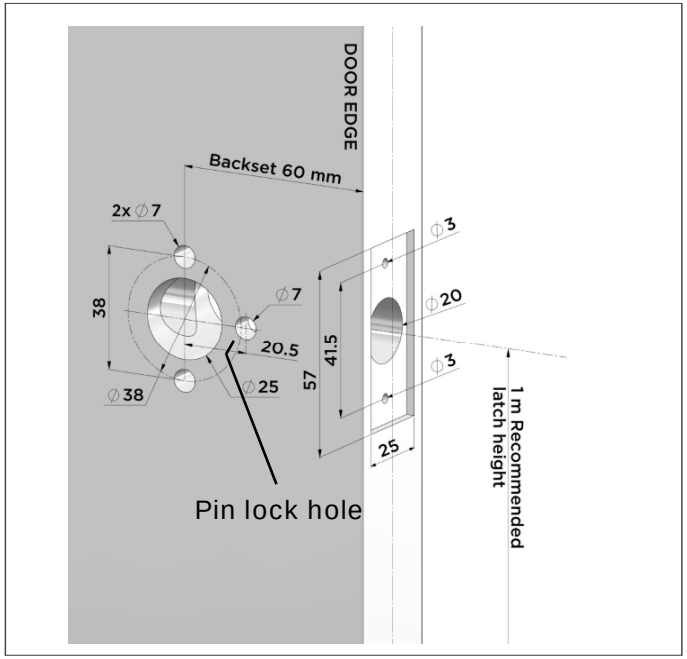

Use the dimensions above to mark the drill holes for the latch components and fixing screws.

The door thickness tolerance is 35mm to 45mm

INSTALLATION INFORMATION - Privacy Lever

1. When installing the spindle for a privacy door handle use the split spindle instead. Ensure the spring is inserted into the spindle hole for each spindle piece. It is easier to insert the spring and spindle piece into each handle pillar, just prior to connecting the handle roses to each door face.

2. Once the rose cover plate is pushed in place against the door face, insert the locking pin into the front side pin hole. Screw this pin into place. When pushing the rose covers into place make sure the hole in the cover is located above the corresponding pin hole.

INSTALLATION INFORMATION - Privacy Lever

1.

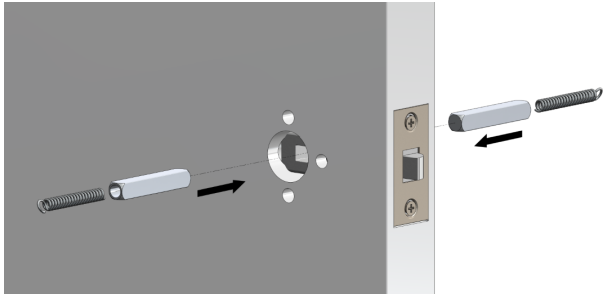

2.

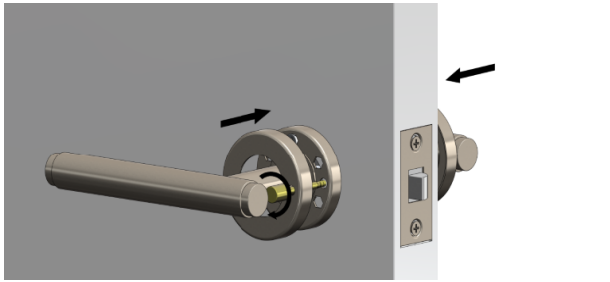

INSTALLATION INFORMATION - Edge Pull

1. Using the dimensions make the cut-out to the side for of the sliding door as indicated.

2. Insert the edge pull into the cut-out. Make sure the fit is snug.

3. Using the screws provided tighten the edge pull in place.

INSTALLATION INFORMATION - Edge Pull

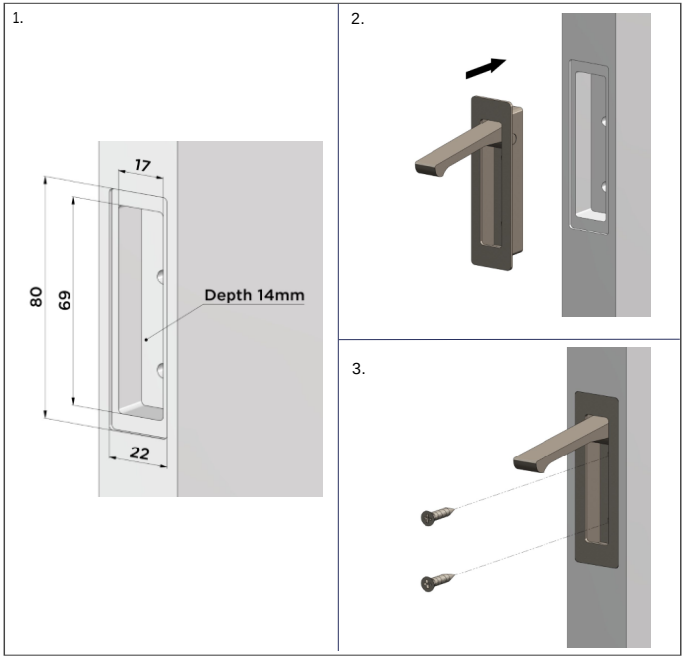

INSTALLATION INFORMATION - Concealed Privacy

Use the correct dimensions to install the wall side plate components into the door catch. Ensure the wall side cut-out height is correct in relation to the door latch as shown.

INCLUDED IN THE BOX

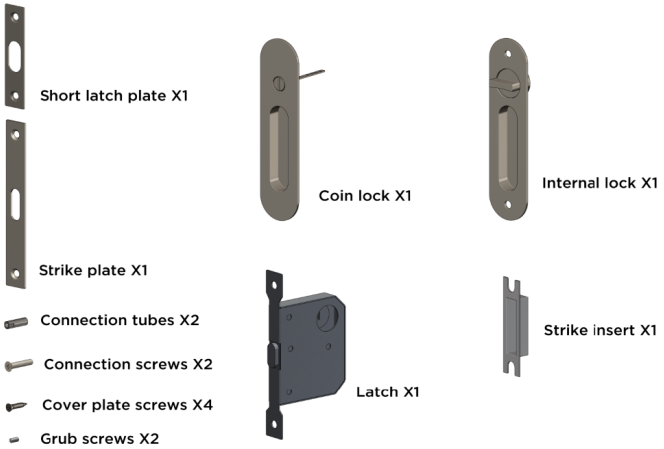

INSTALLATION INFORMATION - Concealed Privacy

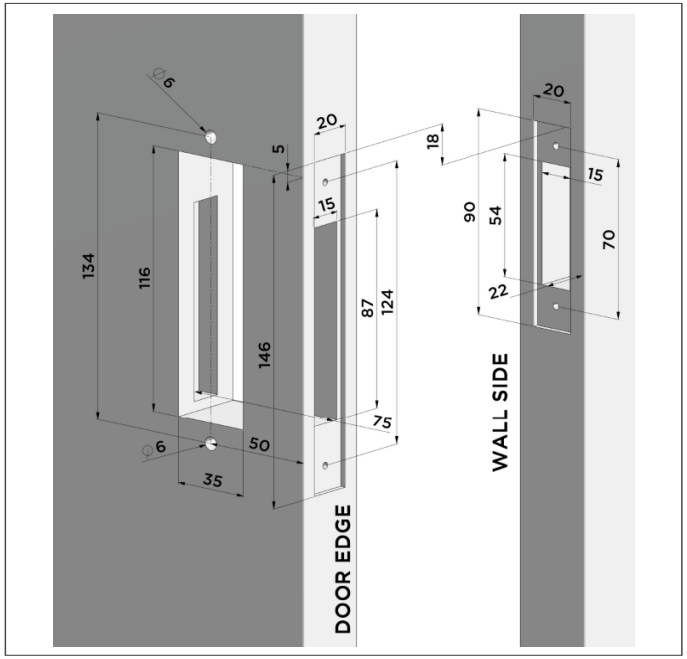

Use the dimensions above to mark the drill holes for the latch components and fixing screws.

The sliding door thickness tolerance is 35mm to 50 mm

INSTALLATION INFORMATION - Concealed Privacy

1. Once the door holes are drilled, insert the latch body and screw the latch cover in place.

2. Cut the coin emergency release connector rod according to the door thickness as shown on the image. Use the cut line to make the cut.

3. Connect the inner lock plate and the outer face plate together using the connecting screws and connecting tubes as shown. The screw lengths are suitable for door thickness according to the min and max sizes.

4. Insert and screw in place the wall catch plate as shown.

INSTALLATION INFORMATION - Concealed Privacy

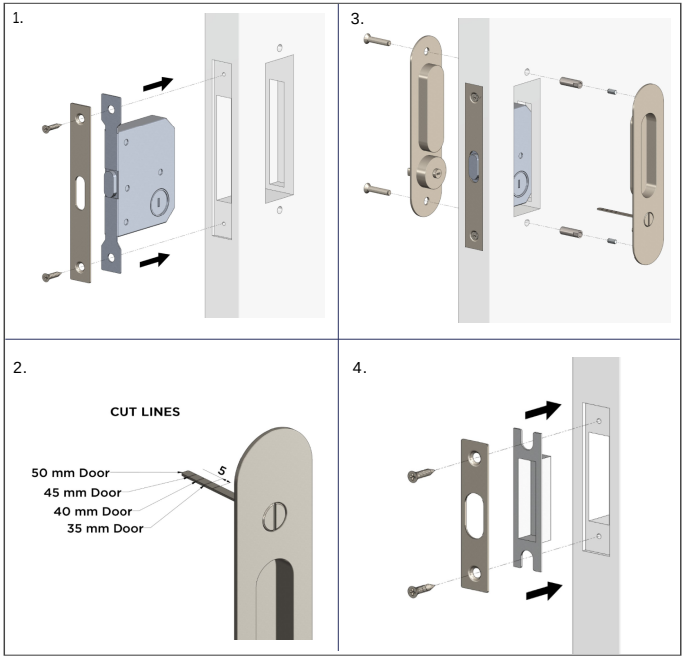

INSTALLATION INFORMATION - Lift-off Hinges

1. The lift-off hinges comes in either left side or right side door hinges. The door side is determined by the side of the door when facing the door from the opening door side. I.e. with the door opening towards you, a right-side hinge will be installed on your right hand side of the door.

2. Mark the outline of the hinge to the door edge, chisel out the counter-sink depth and screw the hinge in place. Then with the door placed in position against the wall, mark the corresponding outline to the wall edge and counter sink the same. Screw the wall side of the hinge to the wall and test the door fit.

3. NOTE: The standard butt door hinge can be fitted as either a left side or right side hinge. The butt hinge is not a lift-off door hinge.

INSTALLATION INFORMATION - Lift-off Hinges

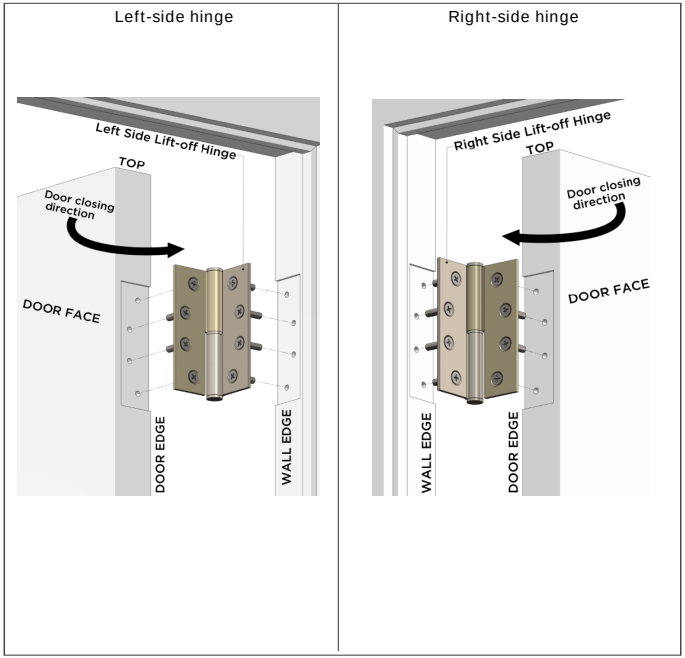

WARRANTY

THE WARRANTY WILL NOT APPLY IF:

- Normal and fair wear and tear, misuse, abuse, or mishap.
- The exposure to excessive moisture derived from lack of ventilation.
- The inability to provide proof of purchase.
- Products not installed by a licensed trades person, failure to follow installation instructions or damage which arises from or during installation.
- Scratches or damage caused by applying physical and or abrasive contact directly to the product.
- The product being damaged by accident or neglect.
- Incorrect use of the product other than its fit for purpose.
- The purchaser attempting to modify or repair the product.
- Full Warranty and Terms & Conditions can be viewed at: **meir.com.au/meir-australia-warranty/**

CLEANING

- Do not install the door hardware using any form of acetone silicones.
- Do not apply physical items (such as tools) directly to the product surfaces other than installation screws.
- Never use detergents, citrus based cleaners, bleach, or abrasive cream
- A soft cloth can be used to remove surface dust. Alternatively, wipe with warm soapy water to ensure the finish remains in a superior condition for continued use.

CONTACT

P: 1800 012 122
P: +61 3 8678 1722 (international)
E: sales@meir.com.au

meir.