Bianca
Wall Basin/Bath Mixer

Nero

187mm Whole Set

Lead Free

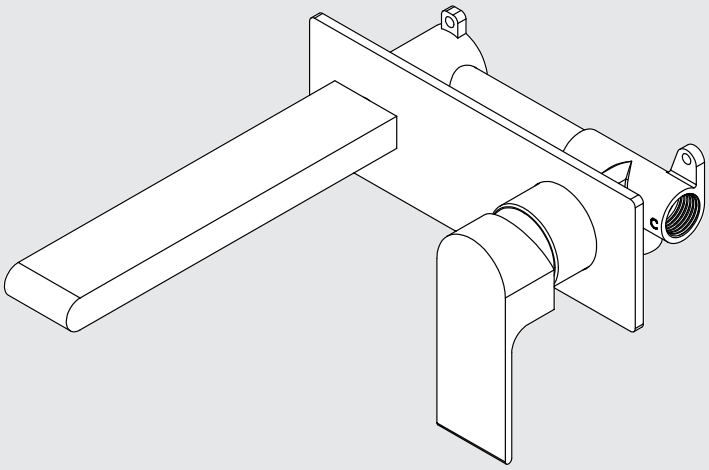

Versions:202506

Drawing

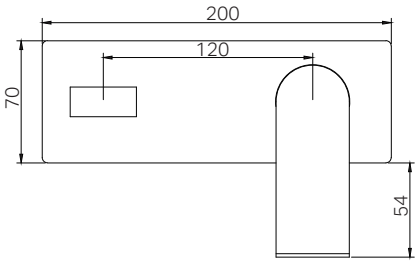

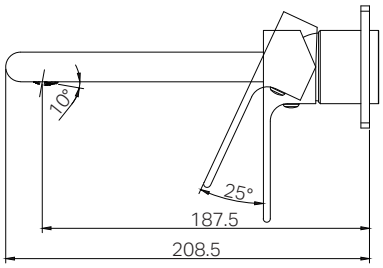

Specifications

Watermark License
WM-060073
Temperature Rating
Min 1˚C-Max 75˚C
Pressure Rating
Min 150kpa - Max 500kpa

Group Item

1x Universal Body
1x Trim Kits Only

Finish & SKU

Chrome NR321510aCH	Gun Metal NR321510aGM	Brushed Nickel NR321510aBN
Matte Black NR321510aMB	Brushed Gold NR321510aBG	Brushed Bronze NR321510aBZ

*Dimensions are nominal measurements only
**Includes an additional non-restricting aerator for bath use

Installation Instruction For Body

GENERAL INSTRUCTIONS:

- This product must be installed by a licensed plumber. Ensure that your plumbing installation conforms to the Australian/New Zealand Standard AS/NZS 3500.
- All pipework must be thoroughly flushed prior to the installation of the mixer. In-line filters must be fitted on both hot and cold supplies to prevent foreign particles from damaging the ceramic cartridge.
- All outlets used primarily for personal hygiene must deliver water at a safe temperature in accordance with regional regulations.

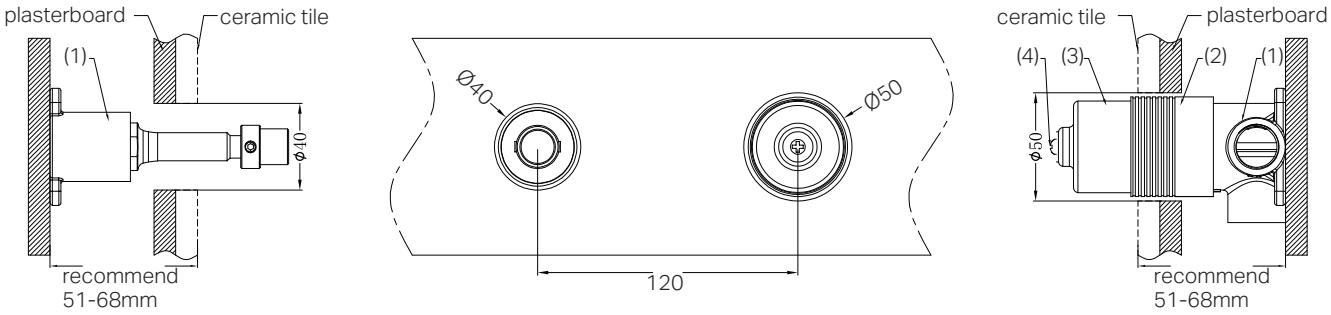

1. Secure the mixer body (1) to the nogging, ensuring an installation depth of 51-68mm from the nogging to the ceramic tile.
Note: Do not remove the protective sleeve (2)from the mixer body.
2. Connect the cold and hot water supply lines and perform a leak test.
3. Drill a o50mm and a o40mm hole in the plasterboard for mixer body installation, and then position the plasterboard as shown in the above imaqe.

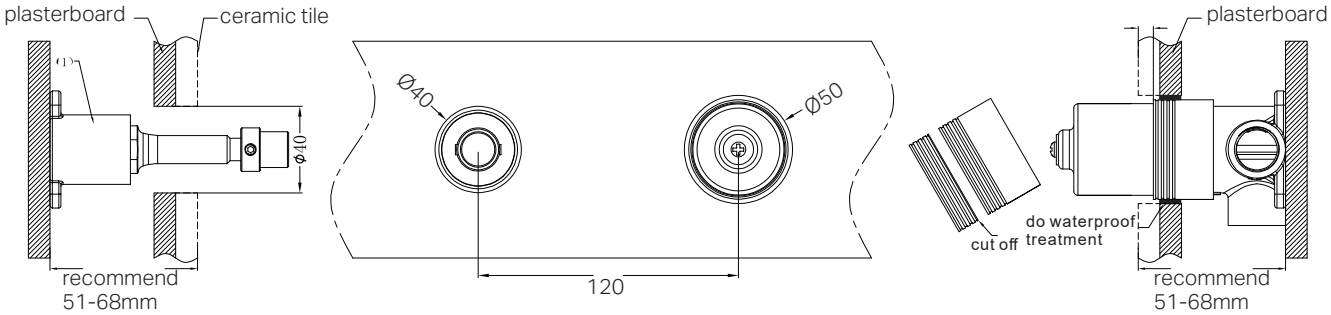

4.Mark the protective sleeve (2) 4-7mm from the ceramic tile surface to the body and waterproof the gap between the plasterboard and body.
5.Remove the self-tapping screw, washer, and protective sleeve, then cut the sleeve at the marked point.
6.Reattach the self-tapping screw, washer, and protective sleeve.

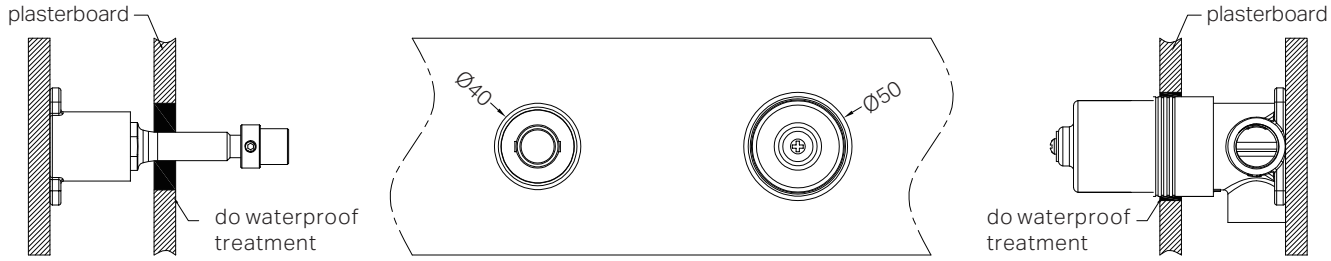

7.Waterproof the gap between the plasterboard and body

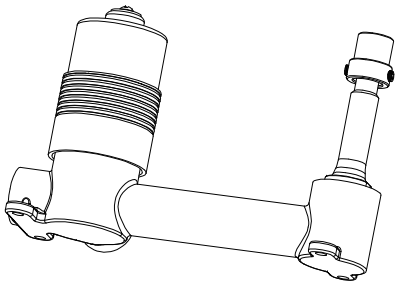

Installation Instruction For Trim Kits

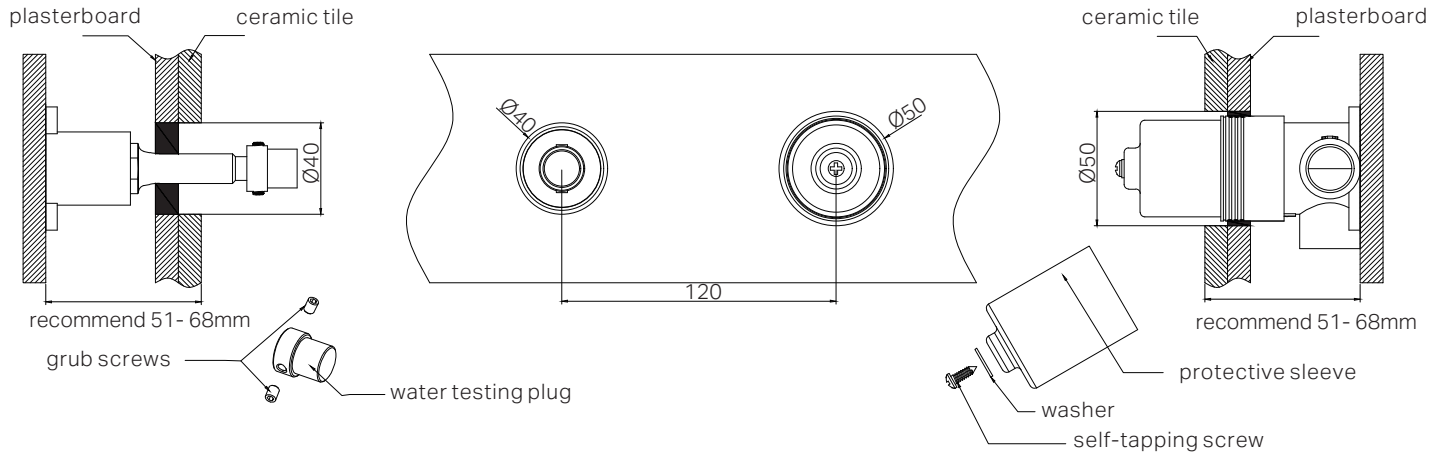

1. Drill a Ø50mm and a Ø40mm hole in the ceramic tile, then position it as shown in the above diagram.
2. Undo the self-taping screw to remove the protective sleeve, and release the grub screws to remove the water testing plug.

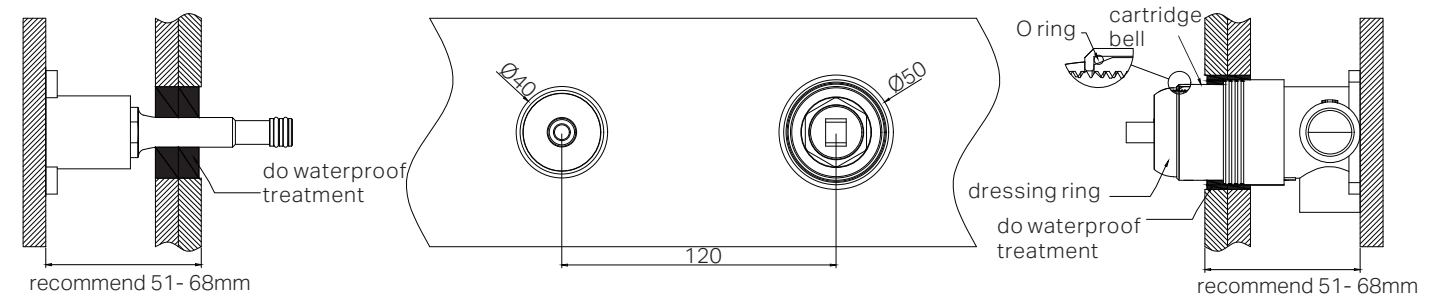

3. Insert the O ring to the cartridge bell groove, and slide the cartridge bell onto cartridge.
4. Apply waterproof treatment to the area indicated in the diagram above.
5.Thread the dressing ring on the cartridge bell.

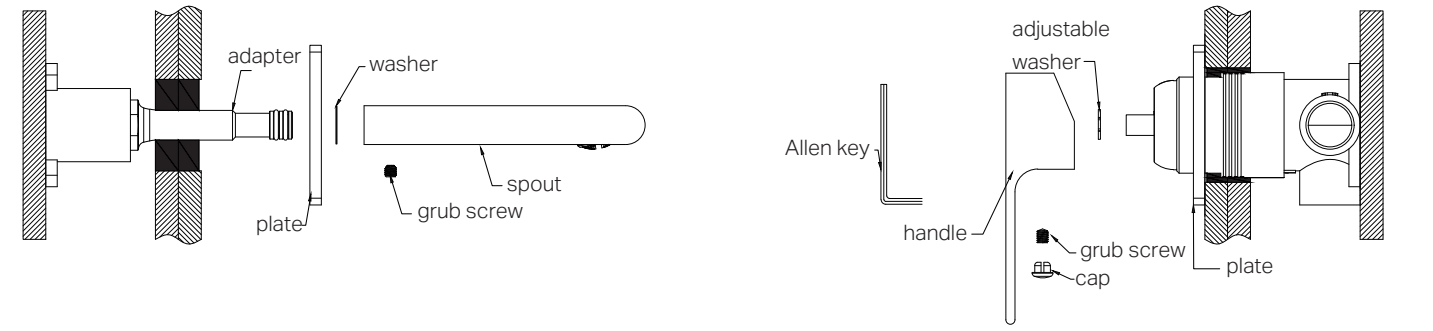

6. Slide the backplate and washer onto the wall, set the spout in place, and secure it tightly using the grub screw.
7. Attach the washer to the cartridge rod, position the handle, tighten it with a grub screw using an Allen key, and cap the grub screw hole.
Please note: there is a washer between backplate and the spout.

MAINTENANCE AND CARE:

- Regularly check the mixer and connections for signs of wear or leaks.
- Clean the tap with mild soapy water to maintain its appearance, avoiding harsh chemicals and abrasive materials that may damage the finish.

FINAL INSPECTION:

- Ensure the tap operates smoothly and that there are no leaks at the connections.
- Clean the area and the newly installed tap with a soft cloth to remove any installation residues.

Nero

Warranty Policy

Bianca Wall Basin/Bath Mixer 230mm

Nero

Lead Free

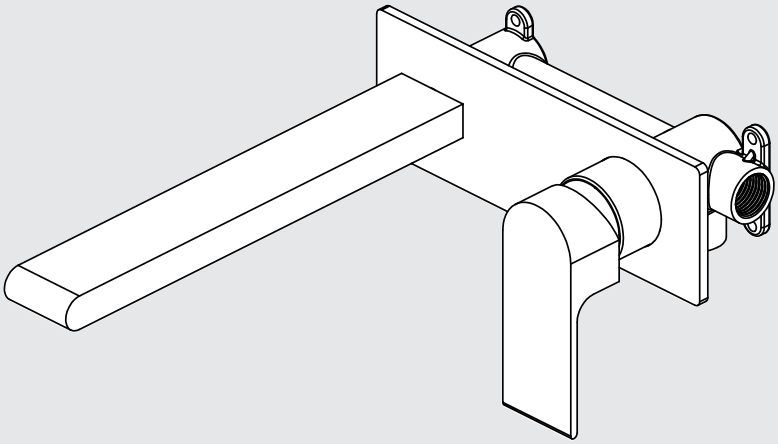

Versions:202506

Drawing

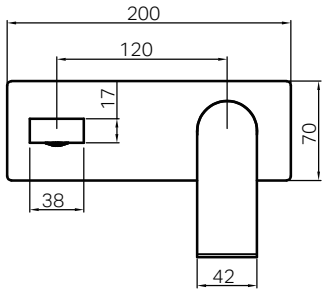

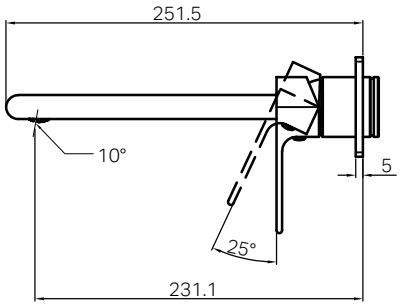

Specifications

Watermark License
WM-060073

Temperature Rating
Min 1˚C-Max 75˚C

Pressure Rating
Min 150kpa - Max 500kpa

Group Item

1x Universal Body
1x Trim Kits Only

Finish & SKU

Chrome NR321510bCH	Gun Metal NR321510bGM	Brushed Nickel NR321510bBN
Matte Black NR321510bMB	Brushed Gold NR321510bBG	Brushed Bronze NR321510bBZ

*Dimensions are nominal measurements only
**Includes an additional non-restricting aerator for bath use

Installation Instruction For Body

GENERAL INSTRUCTIONS:

- This product must be installed by a licensed plumber. Ensure that your plumbing installation conforms to the Australian/New Zealand Standard AS/NZS 3500.
- All pipework must be thoroughly flushed prior to the installation of the mixer. In-line filters must be fitted on both hot and cold supplies to prevent foreign particles from damaging the ceramic cartridge.
- All outlets used primarily for personal hygiene must deliver water at a safe temperature in accordance with regional regulations.

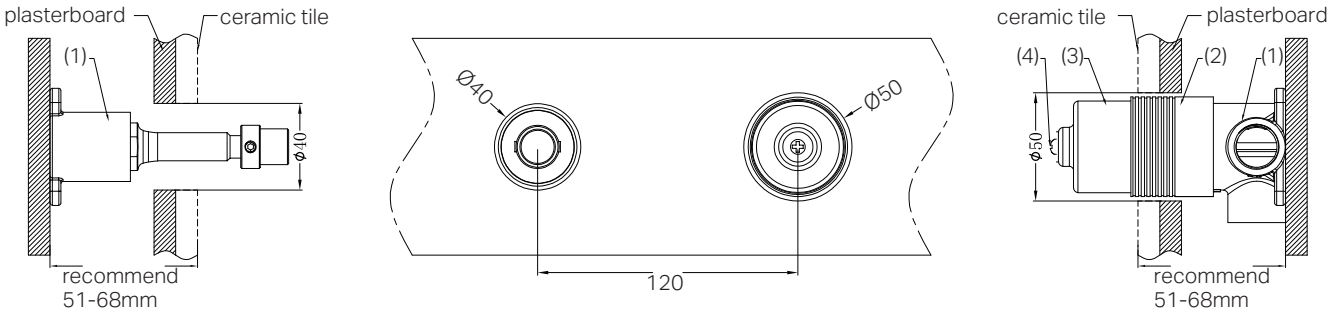

1. Secure the mixer body (1) to the nogging, ensuring an installation depth of 51-68mm from the nogging to the ceramic tile.
Note: Do not remove the protective sleeve (2)from the mixer body.
2. Connect the cold and hot water supply lines and perform a leak test.
3. Drill a o50mm and a o40mm hole in the plasterboard for mixer body installation, and then position the plasterboard as shown in the above imaqe.

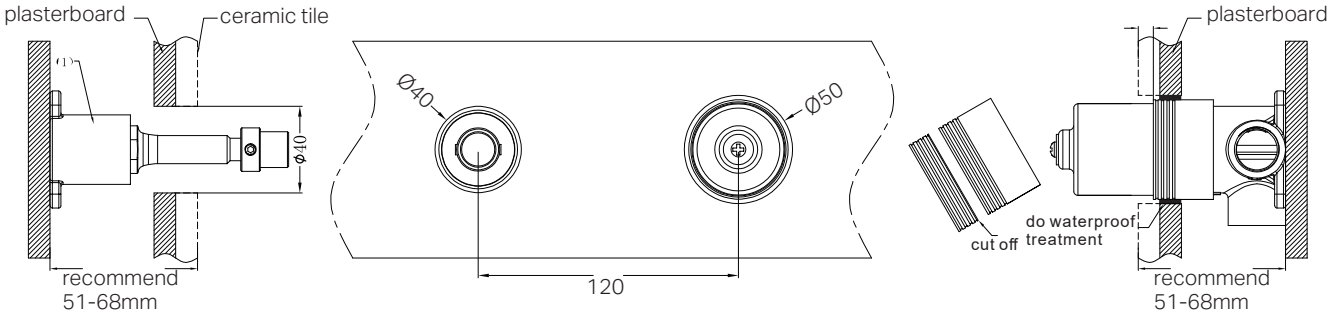

4.Mark the protective sleeve (2) 4-7mm from the ceramic tile surface to the body and waterproof the gap between the plasterboard and body.
5.Remove the self-tapping screw, washer, and protective sleeve, then cut the sleeve at the marked point.
6.Reattach the self-tapping screw, washer, and protective sleeve.

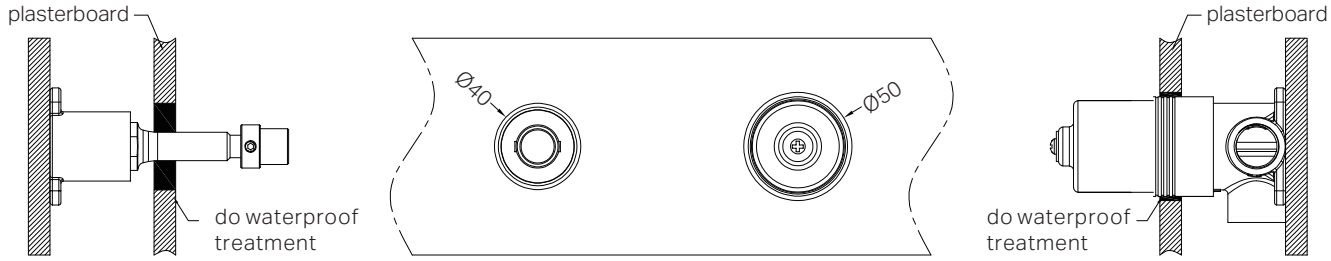

7.Waterproof the gap between the plasterboard and body

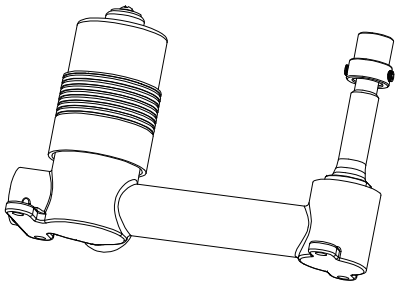

Installation Instruction For Trim Kits

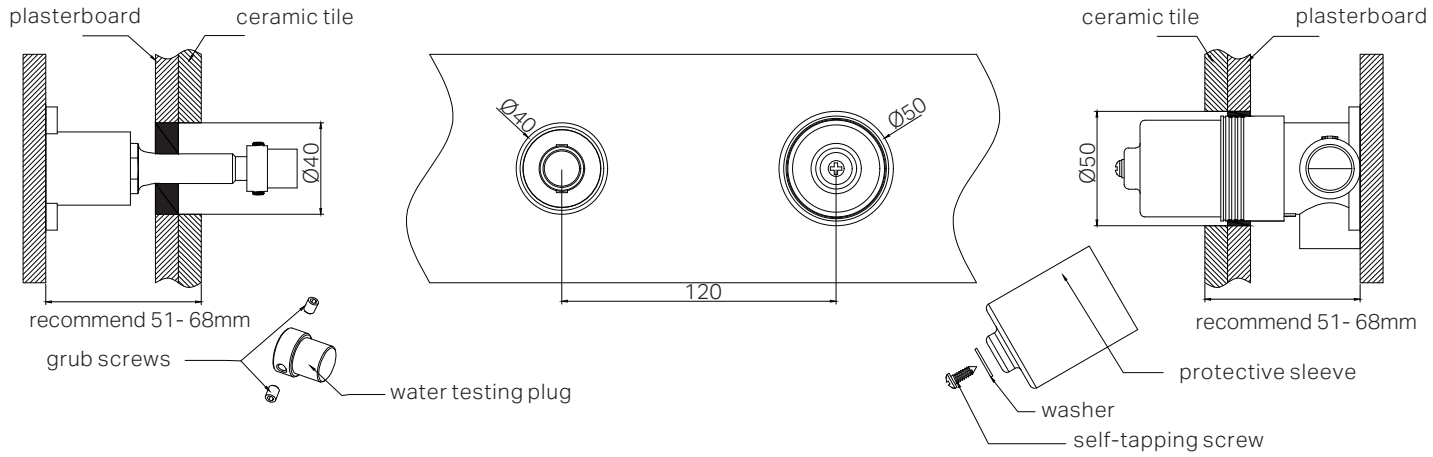

1. Drill a Ø50mm and a Ø40mm hole in the ceramic tile, then position it as shown in the above diagram.
2. Undo the self-taping screw to remove the protective sleeve, and release the grub screws to remove the water testing plug.

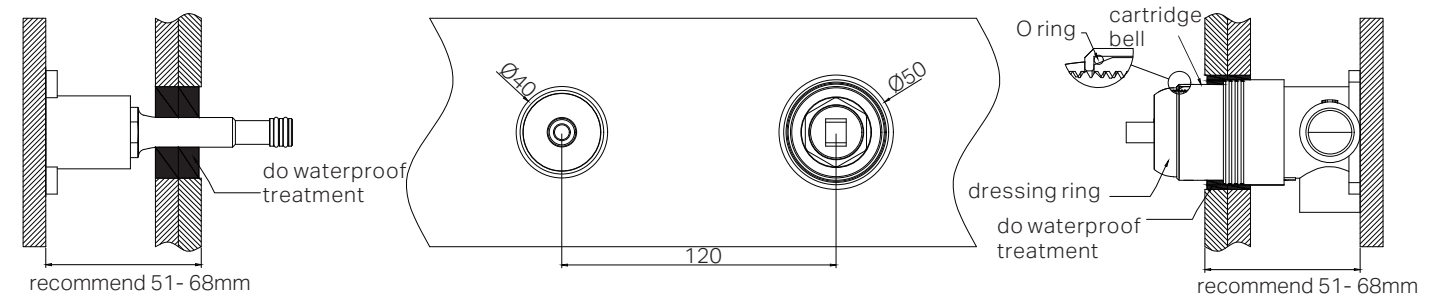

3. Insert the O ring to the cartridge bell groove, and slide the cartridge bell onto cartridge.
4. Apply waterproof treatment to the area indicated in the diagram above.
5.Thread the dressing ring on the cartridge bell.

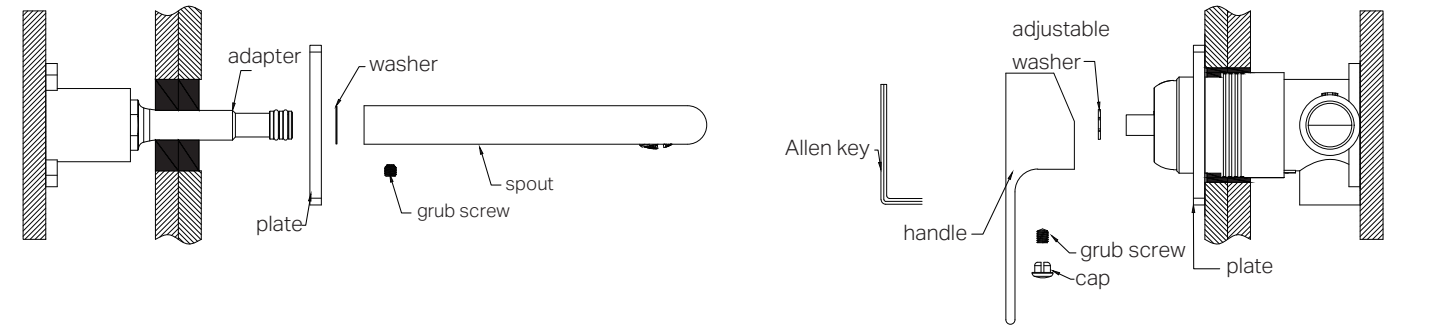

6. Slide the backplate and washer onto the wall, set the spout in place, and secure it tightly using the grub screw.
7. Attach the washer to the cartridge rod, position the handle, tighten it with a grub screw using an Allen key, and cap the grub screw hole.
Please note: there is a washer between backplate and the spout.

MAINTENANCE AND CARE:

- Regularly check the mixer and connections for signs of wear or leaks.
- Clean the tap with mild soapy water to maintain its appearance, avoiding harsh chemicals and abrasive materials that may damage the finish.

FINAL INSPECTION:

- Ensure the tap operates smoothly and that there are no leaks at the connections.
- Clean the area and the newly installed tap with a soft cloth to remove any installation residues.

Nero

Warranty Policy