Dolce
Shower Mixer

Nero

Lead Free

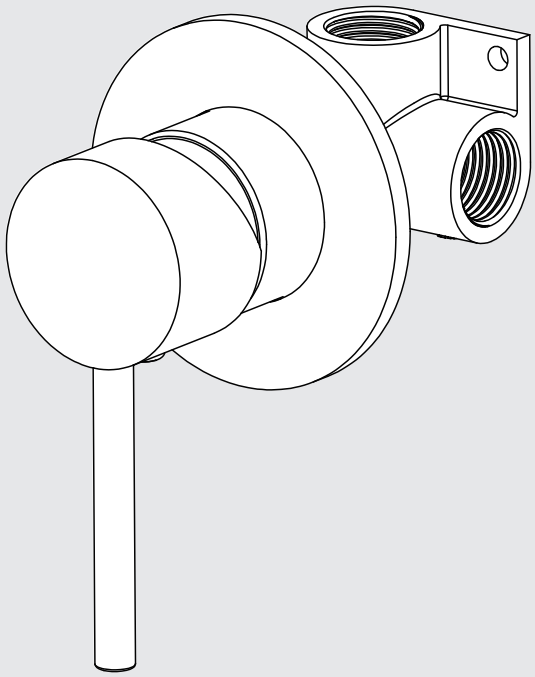

Versions:202506

Drawing

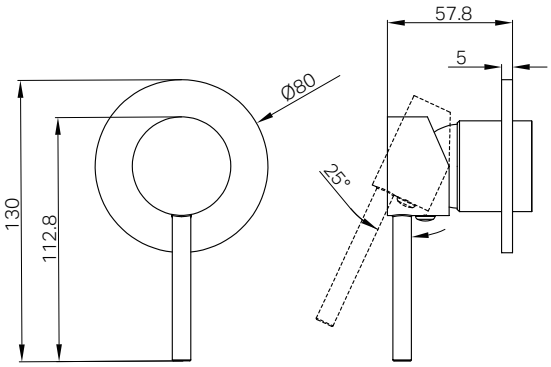

Specifications

Watermark License
WM-060073

Temperature Rating
Min 1˚C-Max 75˚C

Pressure Rating
Min 150kpa - Max 500kpa

Group Item

1x Universal Body
1x Trim Kits Only

Finish

Chrome
NR250811CH

Gun Metal
NR250811GM

Brushed Nickel
NR250811BN

Matte Black
NR250811MB

Brushed Gold
NR250811BG

*Dimensions are nominal measurements only.

Installation Instruction For Body Only

GENERAL INSTRUCTIONS:

- This product must be installed by a licensed plumber. Ensure that your plumbing installation conforms to the Australian/New Zealand Standard AS/NZS 3500.
- All pipework must be thoroughly flushed prior to the installation of the mixer. In-line filters must be fitted on both hot and cold supplies to prevent foreign particles from damaging the ceramic cartridge.
- All outlets used primarily for personal hygiene must deliver water at a safe temperature in accordance with regional regulations.

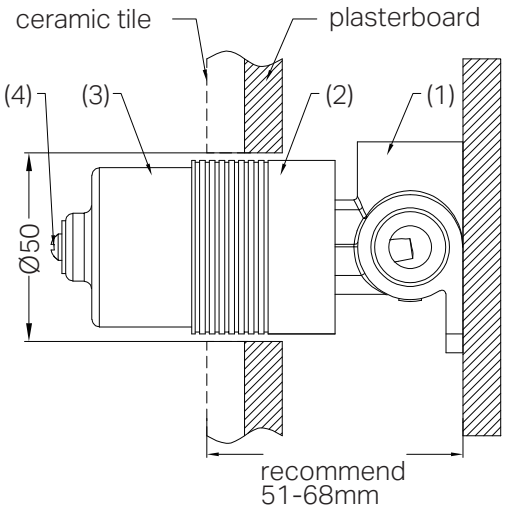

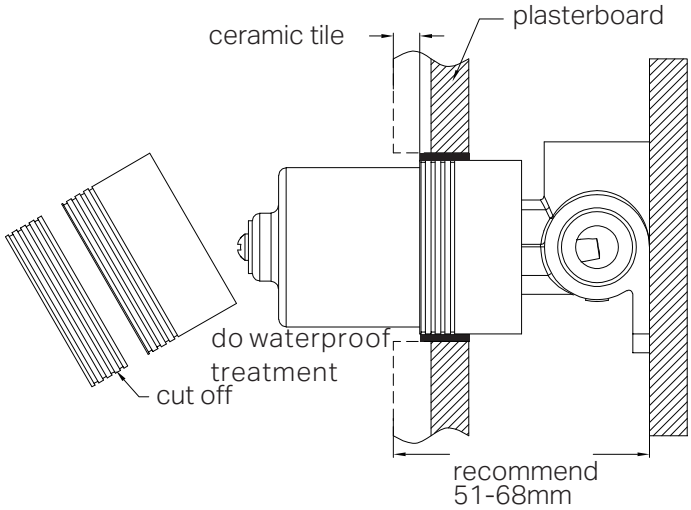

1. Secure the mixer body (1) to the nogging, ensuring an installation depth of 51-68mm from the nogging to the ceramic tile. Note: Do not remove the plastic sleeve (2) from the mixer body.
2.Connect the cold and hot water supply lines and perform a leak test.
3.Drill a φ50mm hole in the plasterboard for mixer body installation, and then position the plasterboard as shown in the above image.

4.Mark the plastic sleeve (2) 4-7mm from the ceramic tile surface to the body and waterproof the gap between the plasterboard and body.
5.Remove the self-tapping screw, washer, and plastic sleeve, then cut the sleeve at the marked point.
6.Reattach the self-tapping screw, washer, and plastic sleeve.

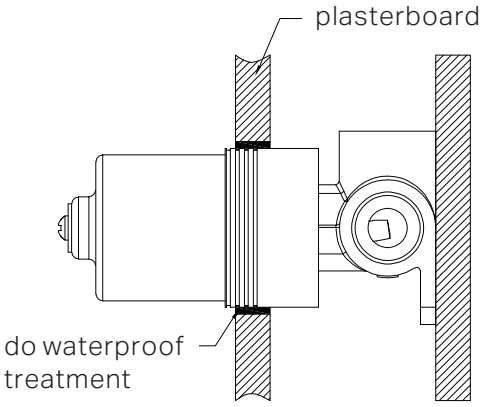

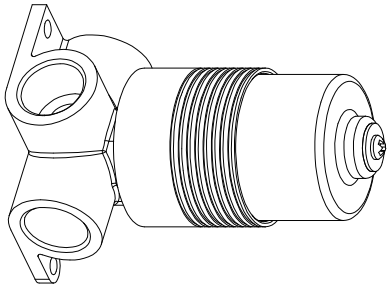

7.Waterproof the gap between the plasterboard and body.

Installation Instruction For Trim Kits Only

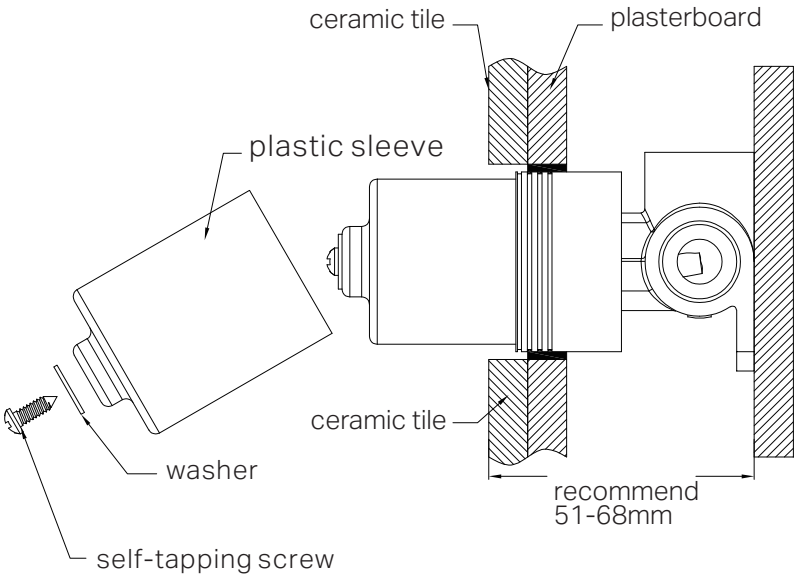

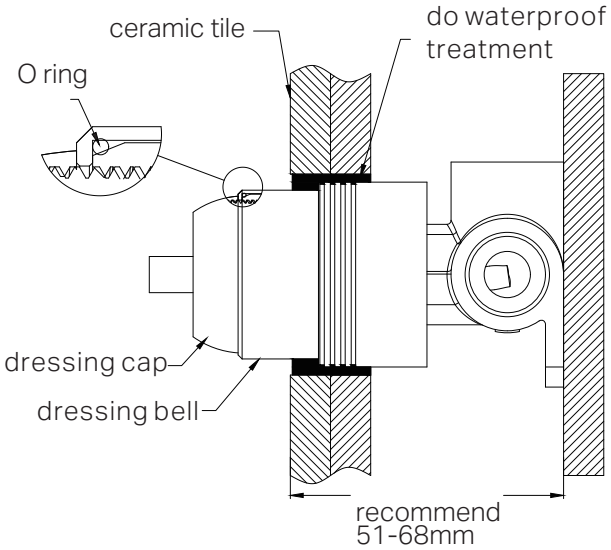

1.Drill a Ø50mm hole in the ceramic tile, then position it as shown in the above diagram.
2.Undo the self-tapping screw, washer, plastic sleeve.

3. Insert the O ring to the dressing bell groove, and slide the dressing bell onto cartridge.
4.Apply waterproof treatment to the area in the diagram above.
5.Tighten the dressing ring on the dressing bell.

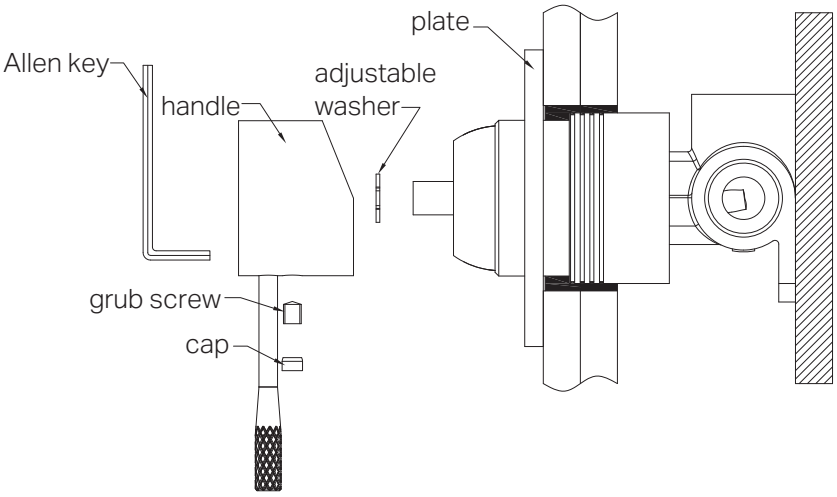

6.Slide the backplate onto the wall.
7. Attach the washer to the cartridge rod, position the handle, tighten it with a grub screw using an Allen key, and cap the grub screw hole.

MAINTENANCE AND CARE:

- Regularly check the mixer and connections for signs of wear or leaks.
- Clean the tap with mild soapy water to maintain its appearance, avoiding harsh chemicals and abrasive materials that may damage the finish.

FINAL INSPECTION:

- Ensure the tap operates smoothly and that there are no leaks at the connections.
- Clean the area and the newly installed tap with a soft cloth to remove any installation residues.

Nero

Warranty Policy