Mecca 240V
Single Vertical Heated Towel Rail

Nero

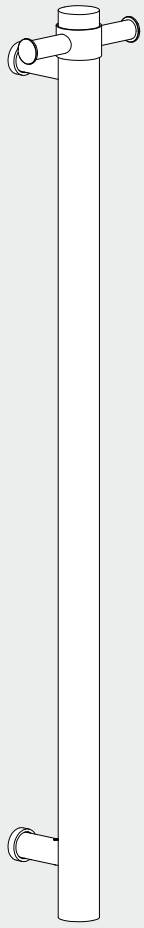

Version:202501

Drawing

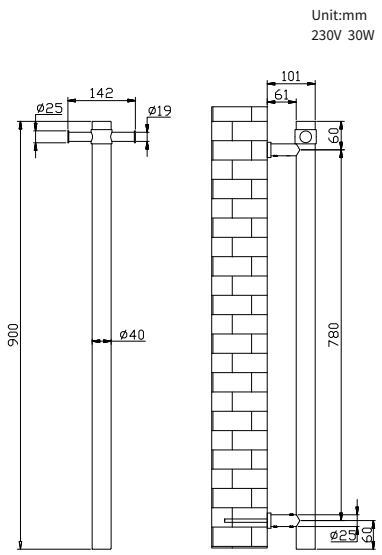

Specifications

Certification
SAA
Voltage
220-240V/50-60Hz
Power Rating
30W Ip55
Appliance Class
Class I

Packaging Includes

1x Heated Towel Ladder
(Including a 1.5m power cord)
1x Connection Wire Leg Kit

Finish & SKU

Brushed Bronze NRV902hBZ	**Graphite** NRV902hGR	**Chrome** NRV902hCH	**Matte Black** NRV902hMB
Brushed Gold NRV902hBG	**Brushed Nickel** NRV902hBN	**Gun Metal** NRV902hGM	

*Dimensions are nominal measurements only.

Safety, Installation, and Care Information

Safety and Installation:

- This 240V heated towel rail must be installed and tested by a qualified electrician in accordance with current local electrical and building regulations.
- Mount the rail on a flat, uniform wall with the base installed at least 600mm above the floor to reduce the risk of accidental contact, particularly by children.
- It is essential that the towel rail is connected to a suitably rated Residual Current Device (RCD) circuit to enhance safety.
- In wet areas, strictly adhere to all electrical guidelines. Avoid installing the rail in locations subject to direct water spray or excessive moisture. It should not be mounted within the shower zone or immediately adjacent to bathtubs and sinks unless additional protective measures, such as splash guards, are implemented.
- When fixing to hollow walls, ensure that suitable anchors are used for a secure installation.
- Do not cover the towel rail with non-ventilating materials (e.g., plastic or waterproof covers), as this could lead to overheating and an increased fire risk.
- Regularly inspect the power cord for signs of damage. If any damage is detected, have the cord replaced immediately by an approved service agent or qualified professional.
- Do not use the towel rail to hang items contaminated with oil, petroleum-based products, or dry cleaning fluids, as these substances can elevate fire risks.
- Never immerse the towel rail in water or any other liquid.
- Ensure that the electrical supply is strictly 240V, 50Hz to avoid potential hazards.

Care Information:

- Always disconnect the power before cleaning the towel rail.
- Clean the unit using a soft, damp cloth with a non-abrasive cleaning agent to preserve the finish. Avoid harsh scrubbing, acidic cleaners, or abrasive products that may damage the surface.
- Periodically check all mounting and electrical connections, and ensure that the unit is well-ventilated to maintain optimal performance and longevity.

Parts Names

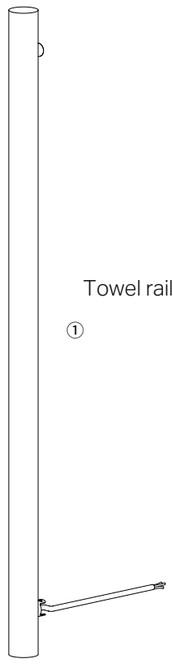

Towel rail x1 ①

② Support Leg x1

③ Concealed Support Leg x1

④ Mounting Bracket x1

⑤ Mounting Bracket(For Concealed Installation) x1

⑥ Expansion Screw x2

⑦ Expansion Plug(E type) x2

⑧ Grub Screw x4

⑨ Cross Recessed Pan Head Screw x2

⑩ Ball Head Allen Key x1

⑪ Towel Hanger x1

⑫ Grub Screw(With Flat-Tip) x1

Nero Heated Towel Rail/Ladder– 240V IP55 Installation

This guide follows the AS/NZS 3000:2018 standard and outlines where a 240V IP55 heated towel rail/ladder can be safely installed in a bathroom.

Understanding IP Ratings

All electrical fixtures in bathrooms must meet certain Ingress Protection (IP) ratings to ensure safety.

- IP55 means:
  - "5" (Dust Protection) – Limited protection against dust; enough to prevent damage to internal components.
  - "5" (Water Protection) – Can withstand low-pressure water jets from any direction (equivalent to IPX5).

Installation Zones for 240V IP55 Heated Towel Rails/Ladders

Our 240V IP55 heated towel rail/ladder is suitable for installation outside Zone 1 in accordance with AS/NZS 3000:2018. Always check with a qualified electrician to ensure compliance with local regulations and site-specific conditions.

Important Safety Notes

- All electrical work must be performed by a licensed electrician.
- Hardwiring is required.
- All circuits must be protected by a 30mA RCD to ensure user safety.

For more details, please contact support@nerotapware.com.au or call +61 387863170

Installation Steps

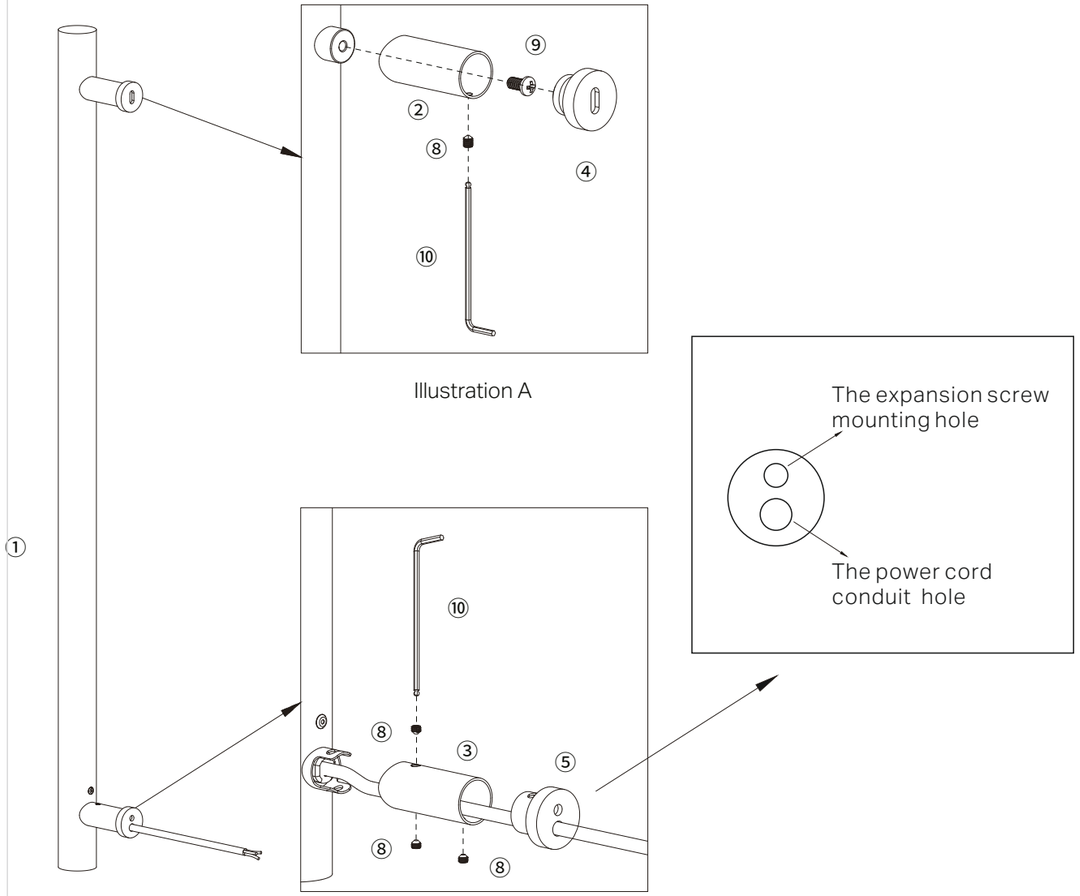

Step 01

Assemble the product following illustration A and B.

Illustration A : secure the ② to the upper nut holder of the ① with the ⑨, and slide the ④ into the ②, and secure it with the ④.

Illustration B: secure the ③ into the lower holder of towel rail with ⑧. Then, pass the power cord through the conduit hole of ⑤, tap ⑤ into ③ and secure it with ⑧.

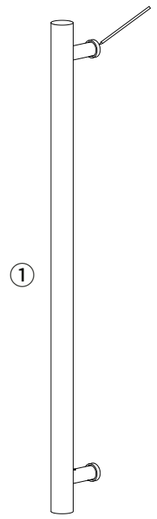

Step 02

Place the ① squarely against the wall and draw the outline of the two bases individually with a wipeable marker.

Step 03

Pull out the mounting bases ④⑤ from the towel rail, with ④ on top and ⑤ on the bottom. Then, overlap them individually with the marked outlines on the wall, to mark the drilling positions of mounting holes and power cord passage hole.

Step 04

Use a φ8 drill bit to drill holes at the marked position. The recommended depth for the mounting hole is 50mm, while the passage hole should go through the wall.

Step 05

Tap the expansion plugs ⑦ into the mounting holes sequentially, flush them with the wall surface.

Step 06

Secure the ④⑤ to the expansion plugs with ⑥.

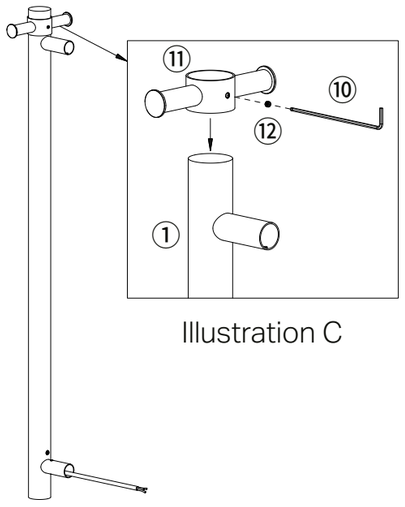

Illustration C

Step 07

Illustration C: Slide the ⑪ into the upper end of the product, and secure it with the ⑩ in a proper position.

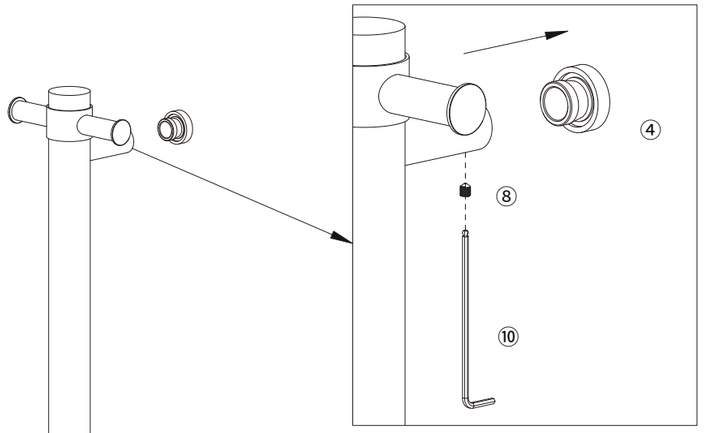

Illustration D

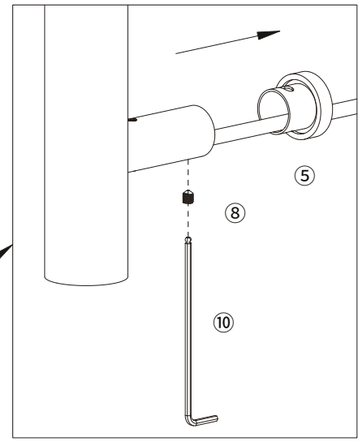

Illustration E

Step 08

Illustration D & Illustration E : Pass the power cord through the conduit hole of the lower mounting base and connect the power cord to the controller. Then, slide the towel rail into the mounting bases and secure it with ⑧. The installation is completed.

Nero

25 YEARS WARRANTY

25

25 YEARS WARRANTY