Mecca Hob Basin Mixer Square Swivel Spout

Nero

Lead Free

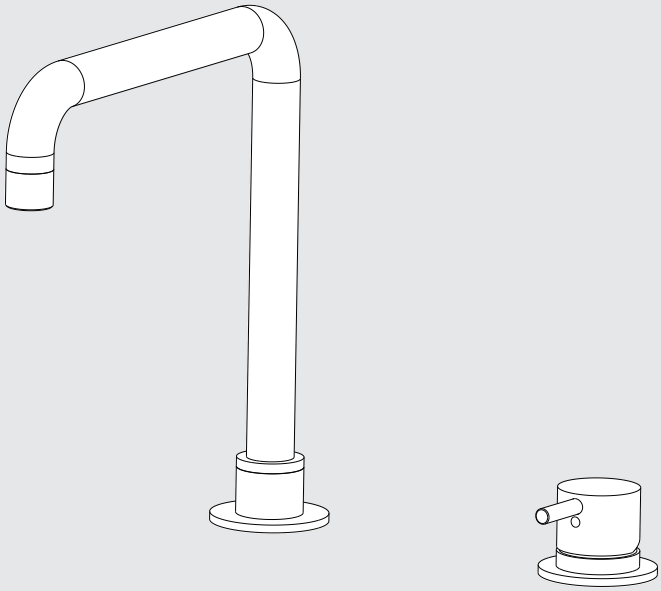

Versions:202506

Drawing

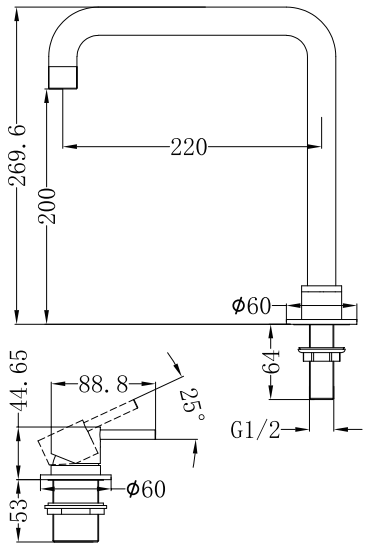

Specifications

SKU
NR221901c

Watermark License
WM-060073

Temperature Rating
Min 1˚C-Max 75˚C

Pressure Rating
Min 150kpa - Max 500kpa

Packaging Includes

1x Hob Spout
1x Body Set
3x Flexible Hoses

Finish

- Chrome NR221901cCH
- Gun Metal NR221901cGM
- Brushed Bronze NR221901cBZ
- Brushed Nickel NR221901cBN
- Matte Black NR221901cMB
- Brushed Gold NR221901cBG
- Matte White NR221901cMW

*Dimensions are nominal measurements only.

Installation Instruction

IMPORTANT: Please read all of the instruction before installation.

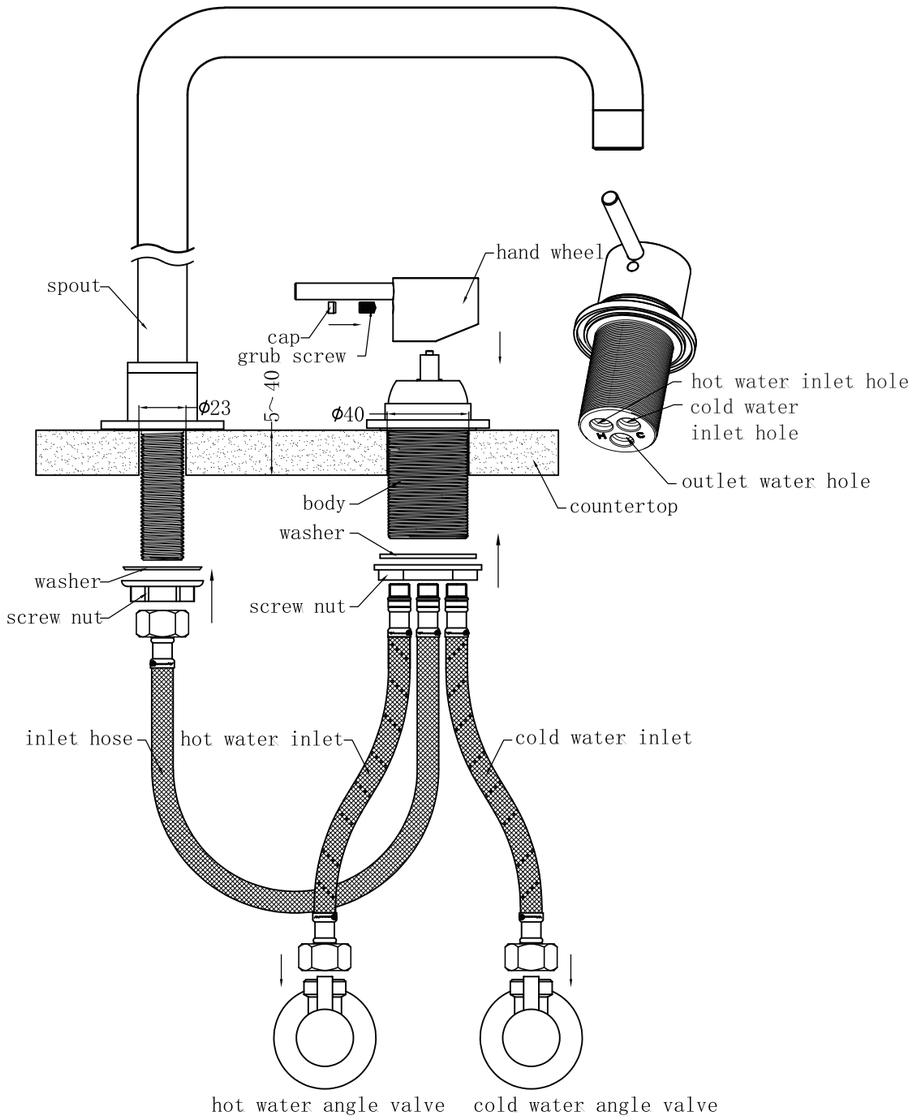

General:

Nero recommends this product is installed by a licensed plumber in compliance with all relevant regional regulations.

Do not hydrostatic test the installation with this mixer installled. Damage to the ceramic cartridge may occur.

All pipe work must be thoroughly flushed prior to the installation of the mixer.

In-line filters must be fitted on both hot and cold supplies to prevent foreign particles damaging the ceramic cartridge.

Do not remove the ceramic cartridge from the mixer when installing.

After installation all connections must be checked for leaks.

All outlets used primarily for personal hygiene shall deliver water at a safe temperature as per regional regulations.

This mixer is not recommended for use in uncontrolled heating systems such as wet-backs or solar heating units unless a suitable tempering valve is fitted.

If limited water flow is experienced, locate aerator and filter washers and clean away foreign material as required.

It is the responsibility of the installer to ensure a waterproof seal is achieved between the product and mounting surface. If in doubt about the requality of the seal, remove the product and reinstall.

1. Please make sure the thickness of your countertop is within range 5-40mm before installation.
2. Drill a 23mm and a 40mm hole for spout and body according to the right picture.
3. Put body and spout into countertop and tighten the screw nut to threaded pipes compressing the rubber washer from the under-side of the counter.
4. Check that the mixer body is correctly positioned, fully tighten the screw nut firmly.
5. Connect flexible hoses according to the right picture.
6. Test for any leaks.

3170399

Nero

Warranty Policy