Mecca Shower Mixer Diverter System

Nero

Lead Free

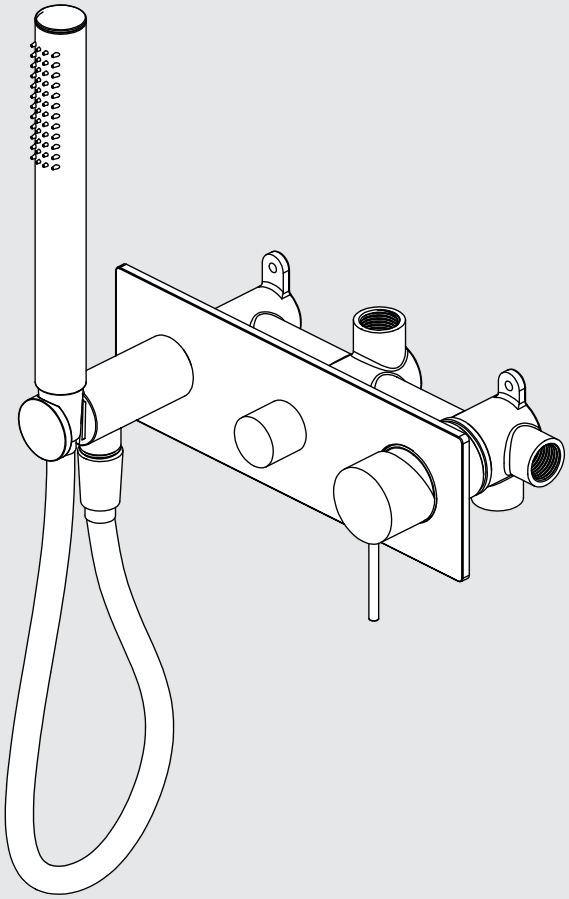

Versions:202506

Drawing

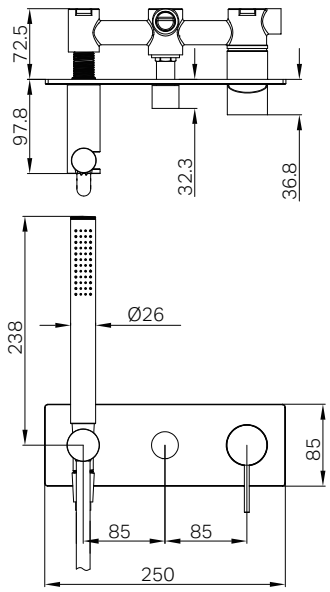

Specifications

Watermark License
WM-060073

Temperature Rating
Min 1˚C-Max 75˚C

Pressure Rating
Min 150kpa - Max 500kpa

Group Item

1x Universal Body
1x Trim Kits Only

Finish & SKU

Chrome NR221912eCH	Gun Metal NR221912eGM	Brushed Bronze NR221912eBZ	Brushed Nickel NR221912eBN
Matte Black NR221912eMB	Brushed Gold NR221912eBG	Matte White NR221912eMW	

*Dimensions are nominal measurements only.

Installationinstruction For Shower System Trim Kits Only

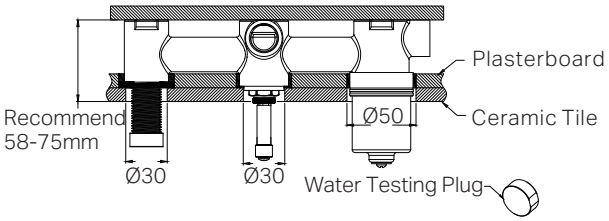

1.Drill a Ø50mm hole and two 30mm holes into the ceramic tile, then proceed to install the ceramic tile as shown in the diagram above.
2.Remove the water testing plug

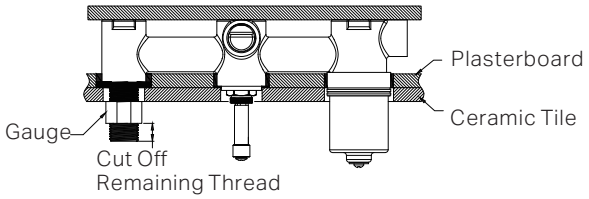

3.Put gauge onto the outlet as above picture. And cut off remaining thread using the provided gauge as a guide.

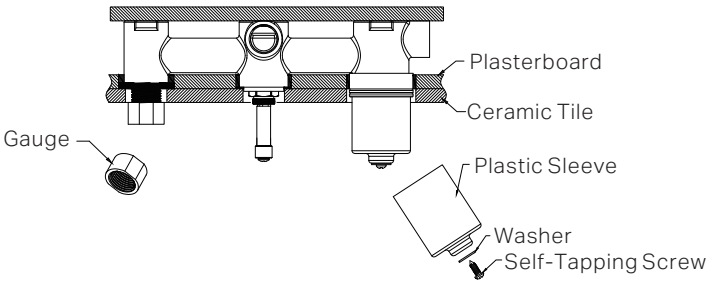

4.Remove the gauge, self-tapping screw, washer, and plastic sleeve in sequence.

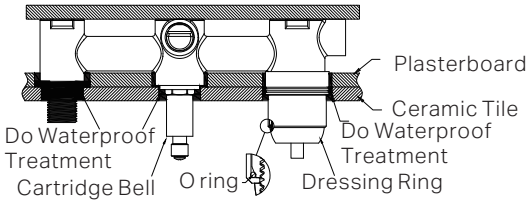

5.Insert the O ring to the dressing bell groove, and slide the dressing bell onto cartridge.
6. Apply waterproof treatment to the three areas indicated in the diagram above.
7.Tighten up the dressing ring on the cartridge bell, and slide Diverter cartridge bell onto the cartridge.

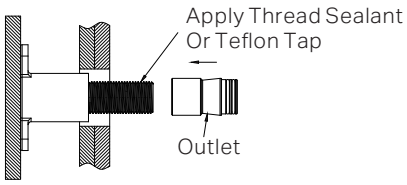

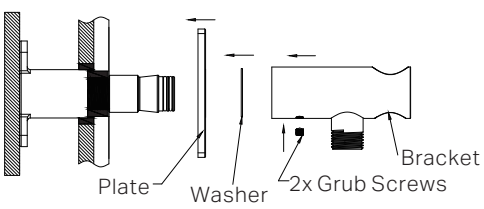

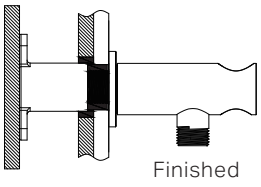

8.Apply thread sealant or Teflon tape to the outlet thread, then use a wrench to tighten the outlet onto it.

9. Install the plate, washer, and bracket onto the outlet body in the order shown above.

Installationinstruction For Shower System Trim Kits Only

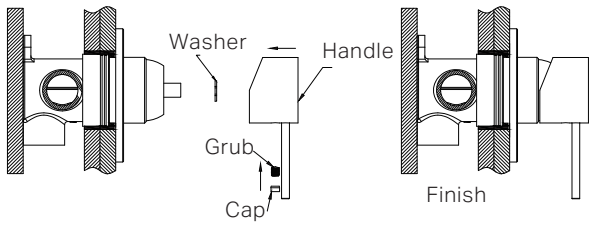

10.Slide plate onto body, attach the washer to the cartridge, position the handle, tighten it with a grub screw using an Allen key, and cap the grub screw hole.

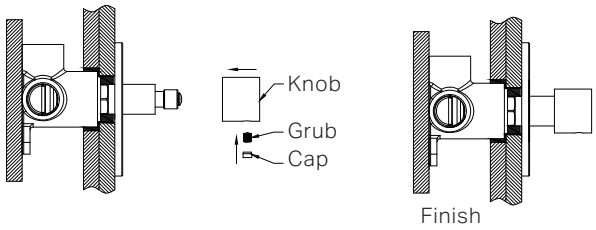

11.Slide plate onto body, position the diverter knob , tighten it with a grub screw using an Allen key, and cap the grub screw hole.

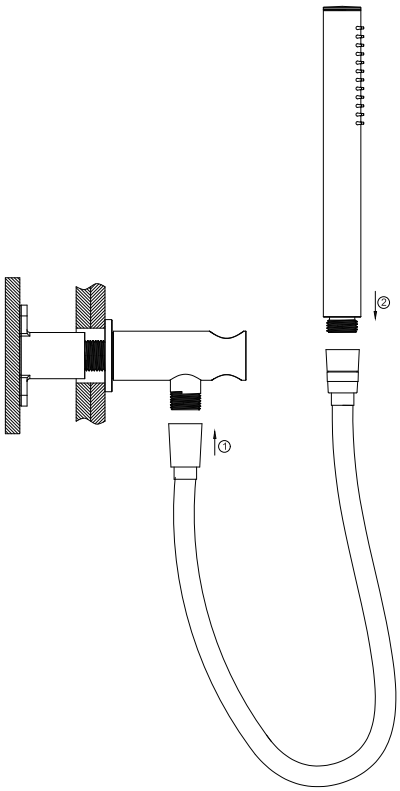

12.Connect the hand shower to the bracket with the hose.

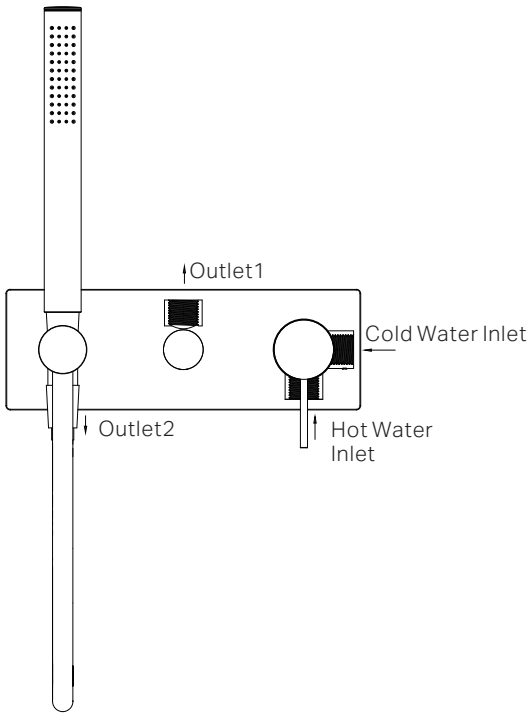

13.TEST & CHECK FOR LEAKS.

Nero

Warranty Policy