Mecca Shower Mixer Diverter System Separate Back Plate

Nero

Lead Free

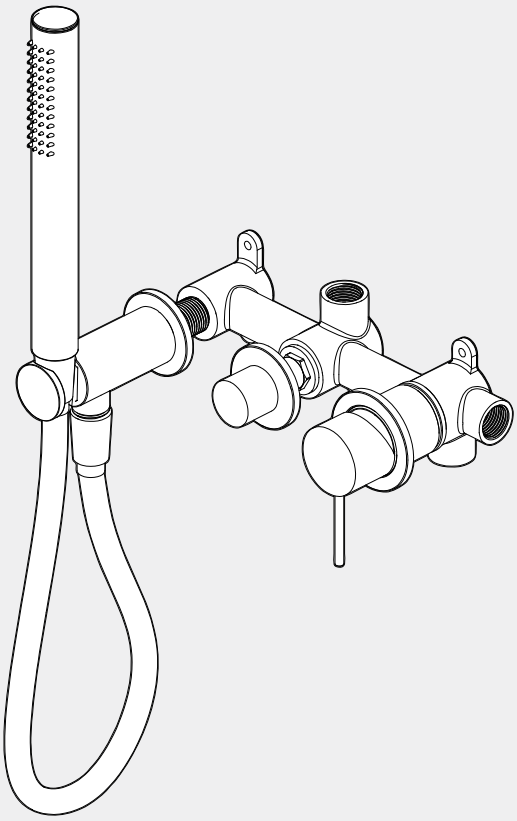

Version: 202606

Drawing

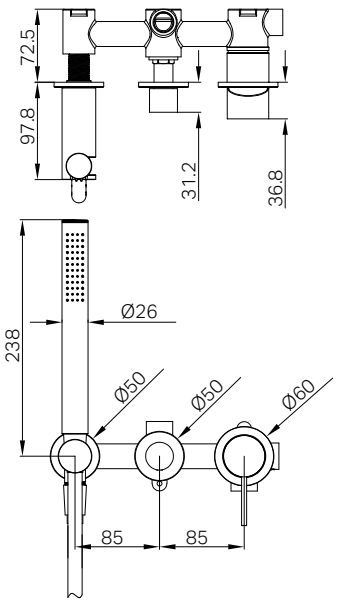

Specifications

Watermark License
WM-060073

Temperature Rating
Min 1˚C-Max 75˚C

Pressure Rating
Min 150kpa - Max 500kpa

Group Item

1x Universal Body
1x Trim Kit Only

Finish & SKU

Chrome NR221912fCH	**Gun Metal** NR221912fGM	**Brushed Bronze** NR221912fBZ	**Brushed Nickel** NR221912fBN
Matte Black NR221912fMB	**Brushed Gold** NR221912fBG	**Matte White** NR221912fMW	**Rome Bronze** NR221911fRB
Tumbled Antique Brass NR221911fTA			

*Dimensions are nominal measurements only.

Installation Instruction For Shower System Body Only

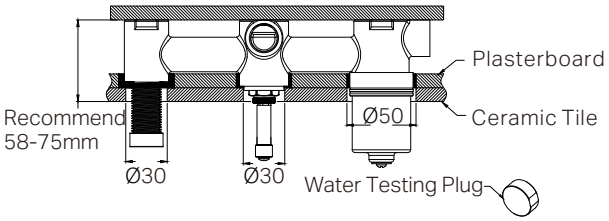

1.Drill a Ø50mm hole and two 30mm holes into the ceramic tile, then proceed to install the ceramic tile as shown in the diagram above.
2.Remove the water testing plug

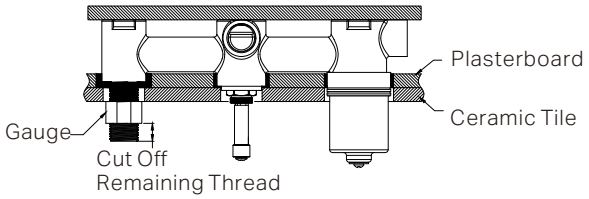

3.Put gauge onto the outlet as above picture. And cut off remaining thread using the provided gauge as a guide.

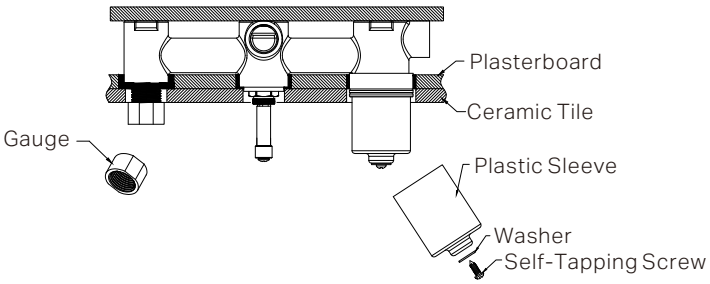

4.Remove the gauge, self-tapping screw, washer, and plastic sleeve in sequence.

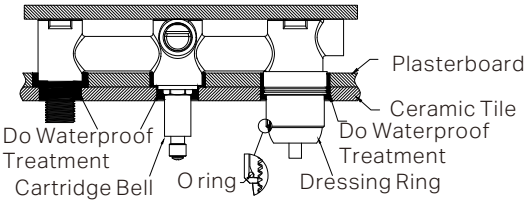

5.Insert the O ring to the dressing bell groove, and slide the dressing bell onto cartridge.
6. Apply waterproof treatment to the three areas indicated in the diagram above.
7.Tighten up the dressing ring on the cartridge bell, and slide Diverter cartridge bell onto the cartridge.

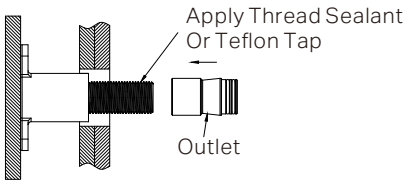

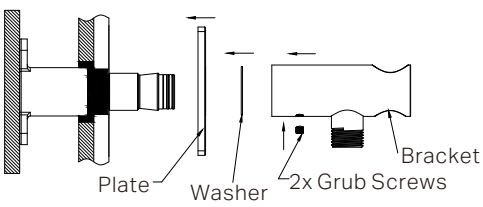

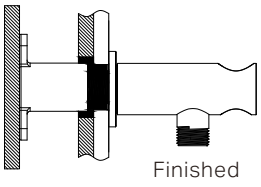

8.Apply thread sealant or Teflon tape to the outlet thread, then use a wrench to tighten the outlet onto it.

9. Install the plate, washer, and bracket onto the outlet body in the order shown above.

Installation Instruction For Shower System Trim Kit Only

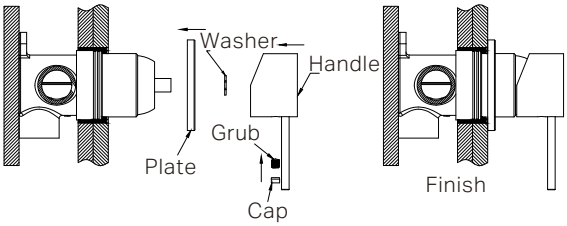

10.Slide plate onto body, attach the washer to the cartridge, position the handle, tighten it with a grub screw using an Allen key, and cap the grub screw hole.

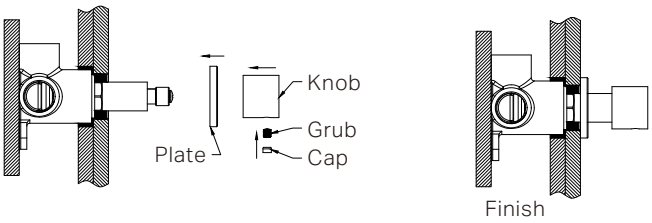

11.Slide plate onto body, position the diverter knob , tighten it with a grub screw using an Allen key, and cap the grub screw hole.

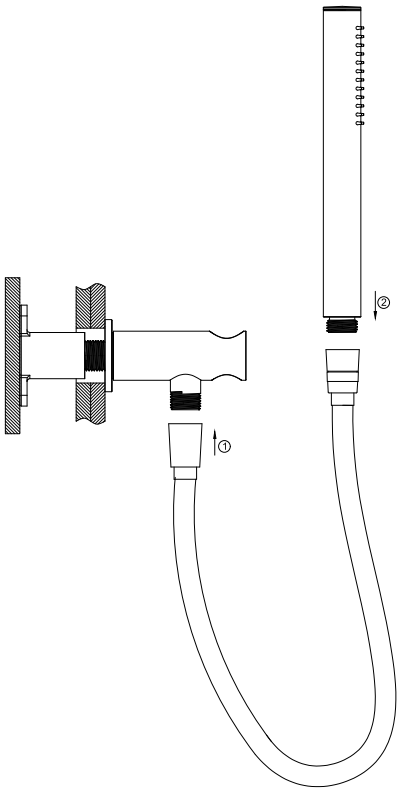

12.Connect the hand shower to the bracket with the hose.

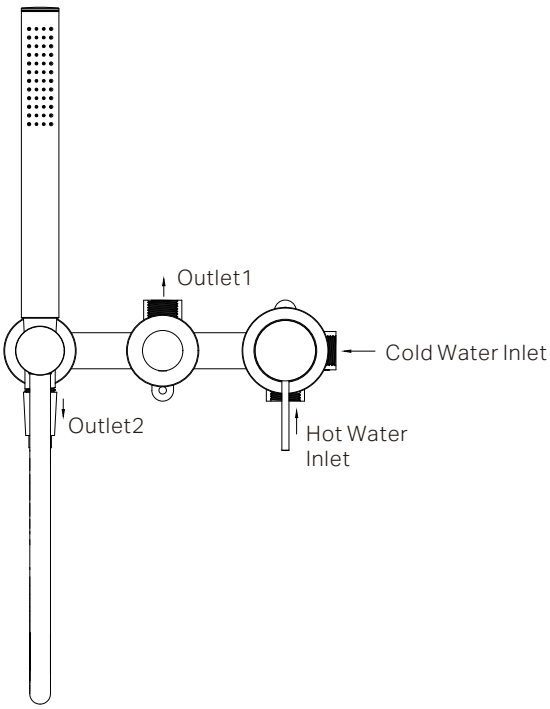

13.TEST & CHECK FOR LEAKS.

Nero

Warranty Policy