Opal Basin Mixer

Nero

Lead Free

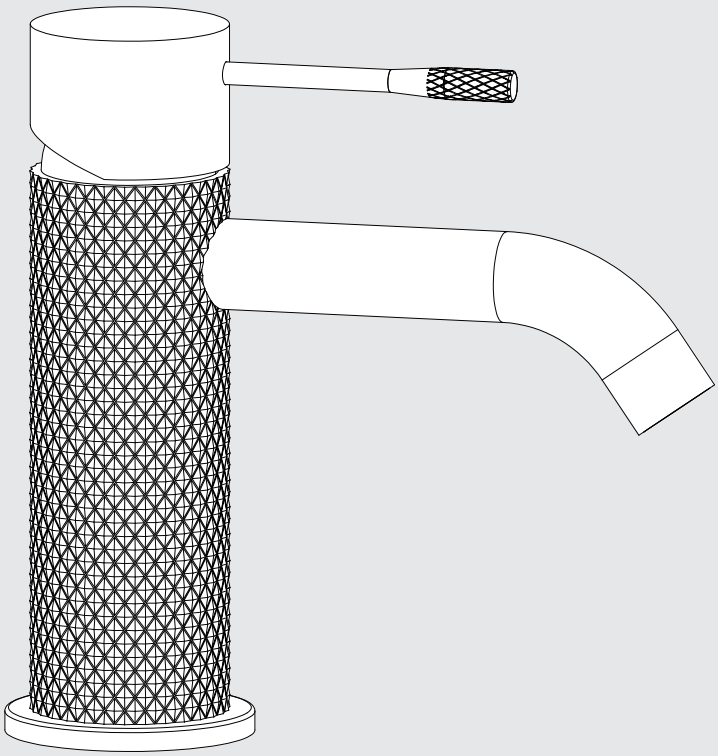

Versions:202506

Drawing

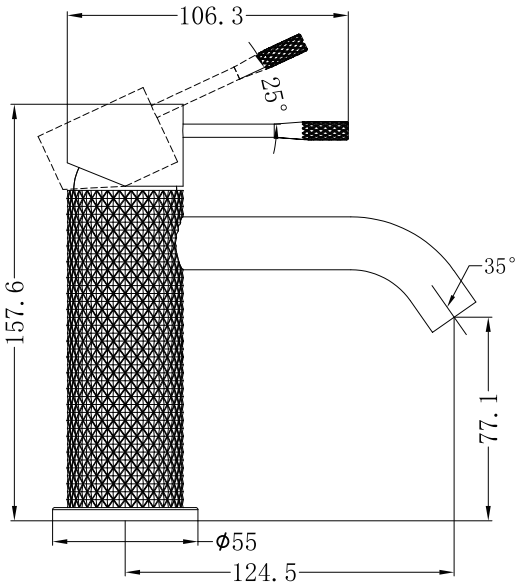

Specifications

Watermark License
WM-060073

Temperature Rating
Min 1˚C-Max 75˚C

Pressure Rating
Min 150kpa - Max 500kpa

Packaging Includes

1x Basin Mixer
2x Flexible Hoses
1x Thread And Locking Screw Set

Finish & SKU

Brushed Bronze
NR251901BZ

Graphite
NR251901GR

Brushed Gold
NR251901BG

Brushed Nickel
NR251901BN

*Dimensions are nominal measurements only.

Installation Instruction

IMPORTANT: Read all instructions before installing.

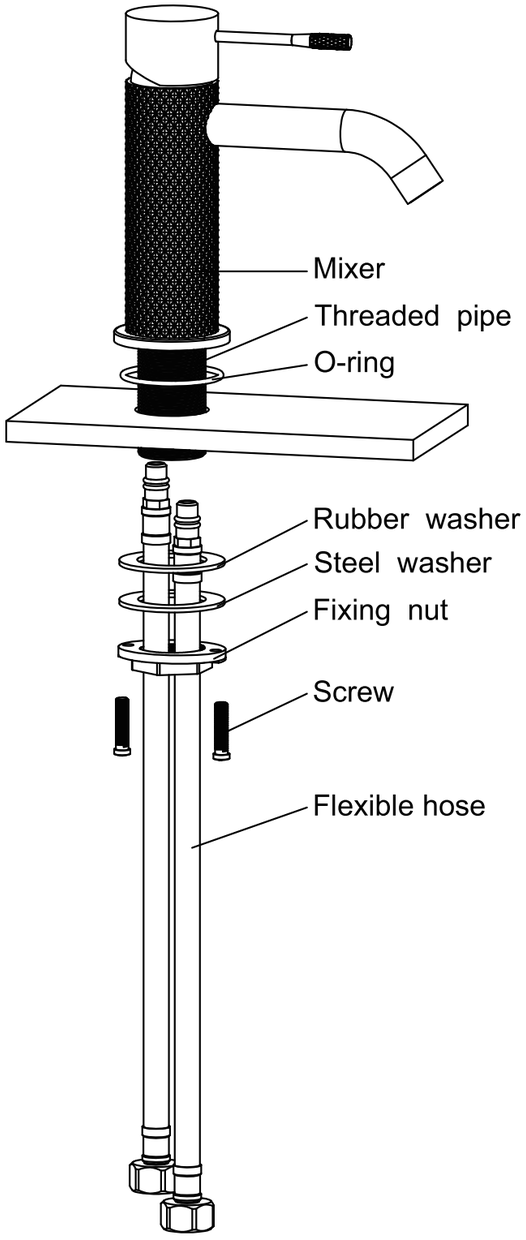

General:

Nero recommends this product is installed by a licensed plumber in compliance with all relevant regional regulations.
Do not hydrostatic test the installation with this mixer installed. Damage to the ceramic cartridge may occur.
All pipe work must be thoroughly flushed prior to the installation of the mixer.
In-line filters must be fitted on both hot and cold supplies to prevent foreign particles damaging the ceramic cartridge.
Do not remove the ceramic cartridge from the mixer when installing.
After installation all connections must be checked for leaks.
All outlets used primarily for personal hygiene shall deliver water at a safe temperature as per regional regulations.
This mixer is not recommended for use in uncontrolled heating systems such as wet-backs or solar heating units unless a suitable tempering valve is fitted.
If limited water flow is experienced, locate aerator and filter washers and clean away foreign material as required.
It is the responsibility of the installer to ensure a waterproof seal is achieved between the product and mounting surface. If in doubt about the quality of the seal, remove the product and reinstall.

Installation Instruction:

1.Screw the flexible hoses into the mixer body and fully hand tighten.
2.Pass the tail of flexible pipes through the hole on the bench top from above, and place the mixer in position on the bench top. Inspect to see if any alteration to the existing supply pipe work is required. Make any necessary alterations.
3.Tighten the fixing nut to treaded pipes compressing the steel washer and rubber washer from the under-side of the counter. Then tighten the 2 screws on the fixing nut.
4.Check that the mixer body is positioned correctly, fully tighten the fixing nut screw and fixing bolts firmly.
5.Connect the water supply pipes to the tail of flexible hoses with the hot water and cold water. Make sure the o-ring in the base ring seals completely around the hole in the mounting surface
6.Test for any leaks.

3170147

Nero

Warranty Policy