Opal Progressive Shower System

Nero

Lead Free

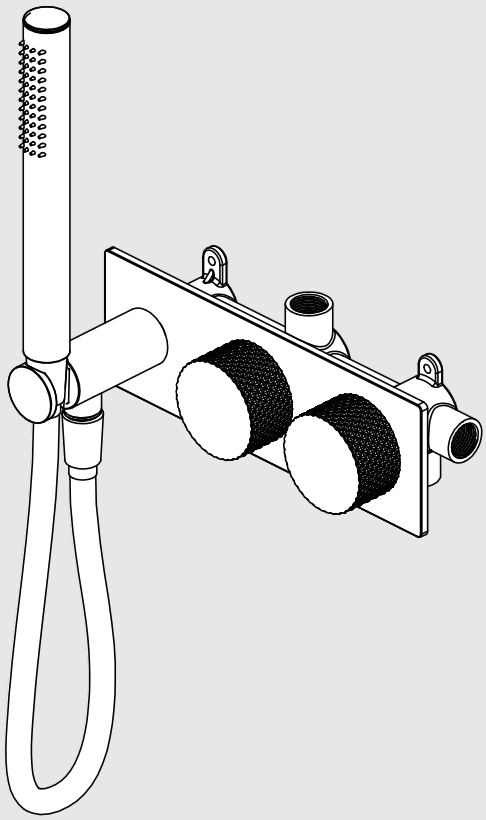

Versions:202506

Drawing

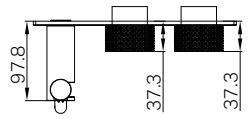

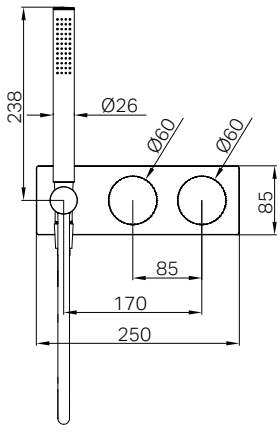

Specifications

Watermark License
WM-060073

Temperature Rating
Min 1˚C-Max 75˚C

Pressure Rating
Min 150kpa - Max 500kpa

Group Item

1x Universal Body
1x Trim Kits Only

Finish & SKU

Graphite
NR252003cGR

Brushed Bronze
NR252003cBZ

Brushed Gold
NR252003cBG

Brushed Nickel
NR252003cBN

*Dimensions are nominal measurements only.

Installation Instruction For Shower System Body Only

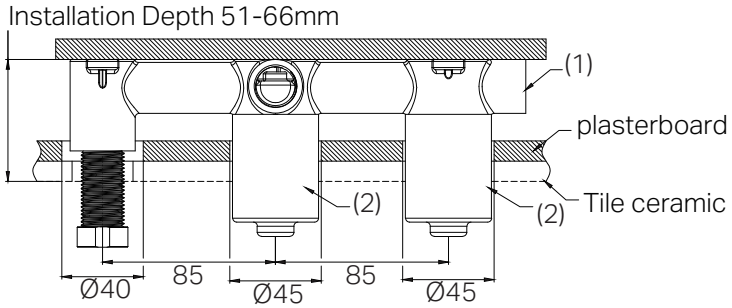

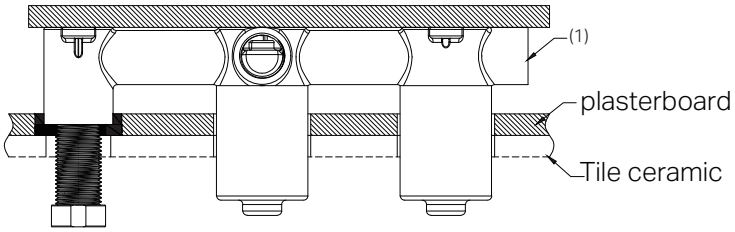

1.Fit off in-wall mixer body into wall structure, and ensure the installation depth is 51-66mm from the tile surface.
2.Connect hot, cold water lines. Test and check for leaks.
3.Install the plasterboard and make holes with diameters of Ø40, Ø45, Ø40, and Ø45.
4.Apply waterproofing between the plasterboard and the mixer body (1) to prevent any potential leaks.
5.The in-wall mixer body installation is complete. Check for leaks.

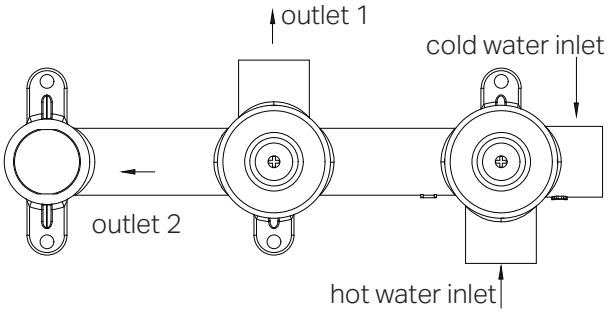

Installation Instruction For Shower SystemTrim Kits Only

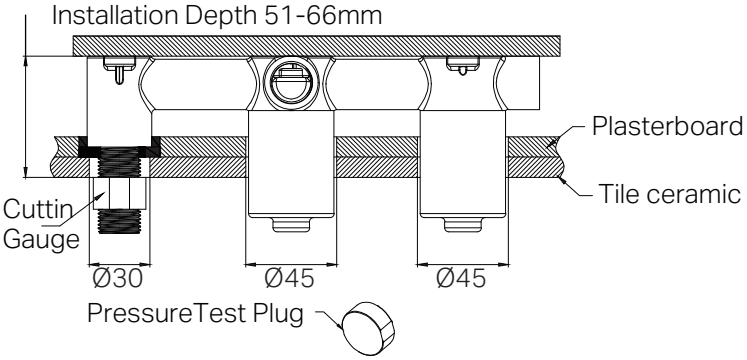

1. Install tiles and drill holes with diameters of Ø30, Ø45, Ø45.
2. Remove the pressure test plug.
3. Assemble the cutting gauge onto the mixer body, make it flush with the tile surface, and trim off any excess part after assembly.

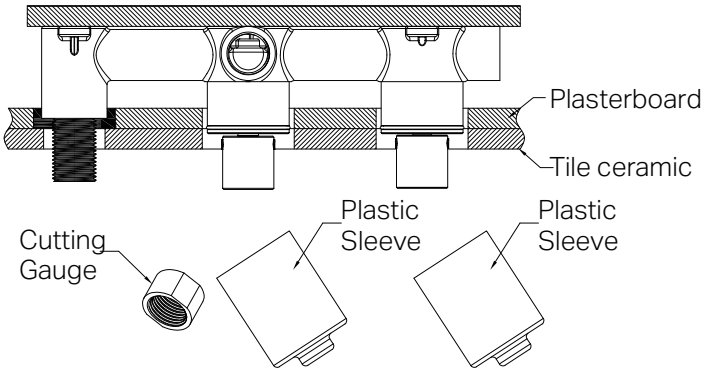

4.Remove the cutting gauge and protective sleeves.

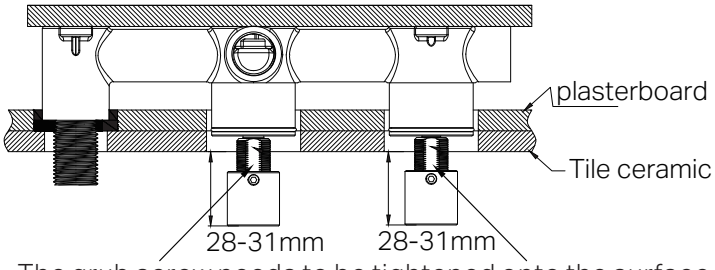

The grub screw needs to be tightened onto the surface.

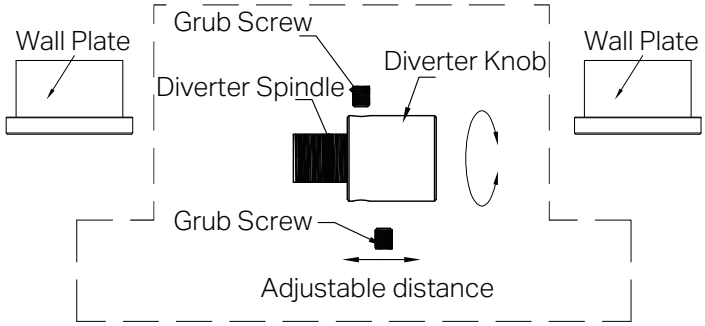

5.Adjust the distance between the Diverter knob and the tile surface to 28-31mm as shown in the diagram.
6.Place the wall plate onto the mixer body.

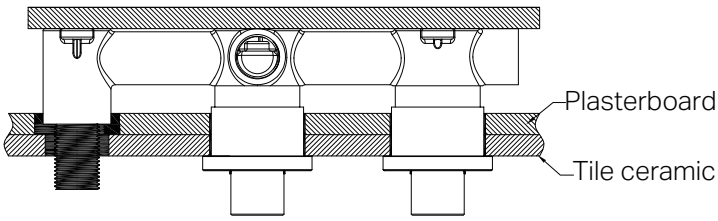

7.Apply waterproofing in the gap between the ceramic tile and the water outlet.

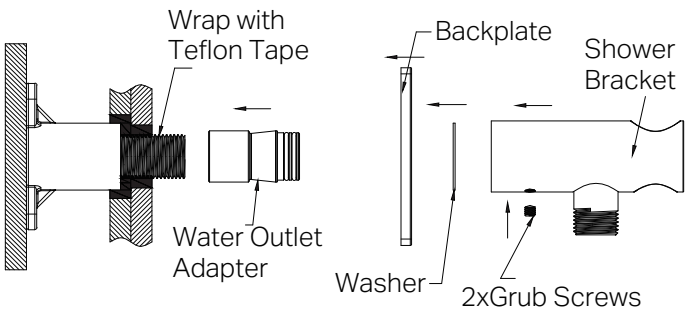

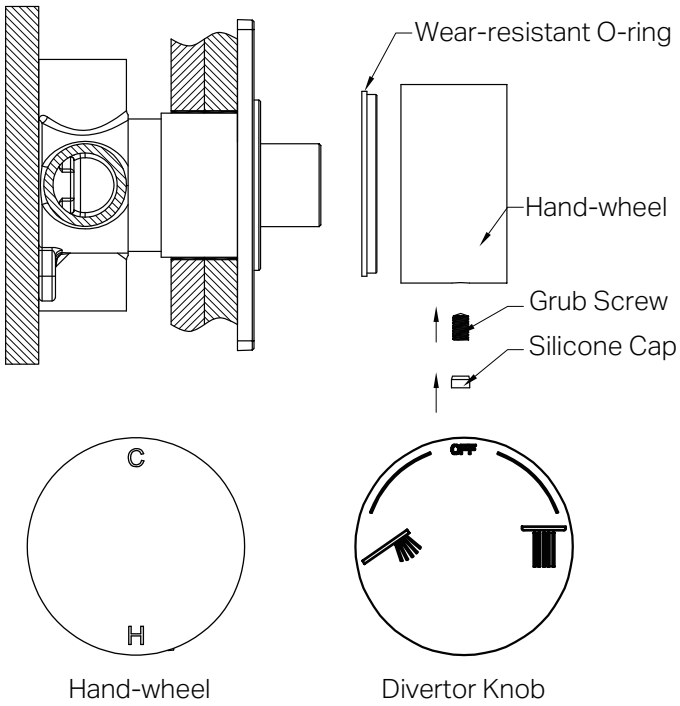

8.Thread the water outlet adapter onto the in-wall body, and seal with Teflon tape.
9.Assemble the Backplate, washer, and shower bracket onto the main body, then secure with screws.

Follow step 10 to install the Hand-wheel and the Diverter Knob
10.Attach the wear-resistant O-ring, hand-wheel/ Diverter knob, grub screw, and silicone cap, securing them in place.

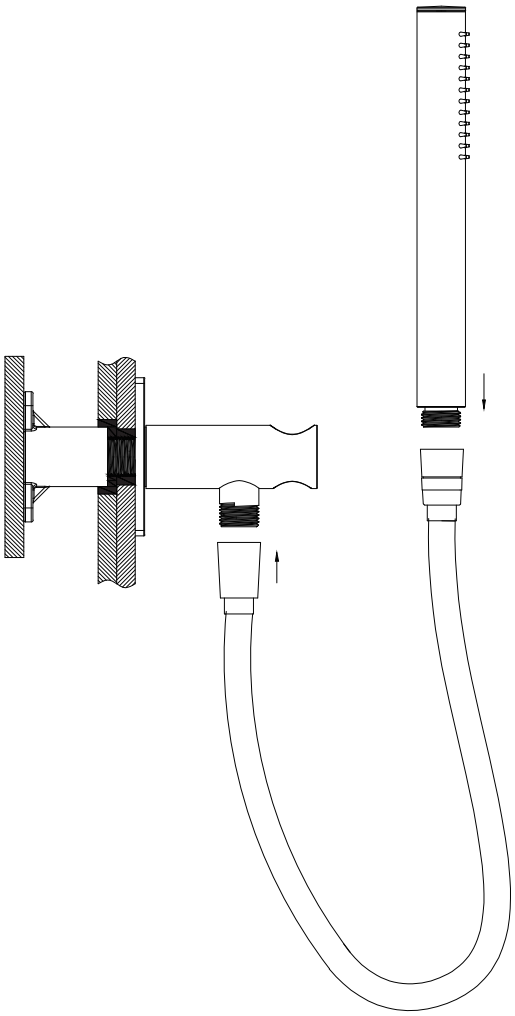

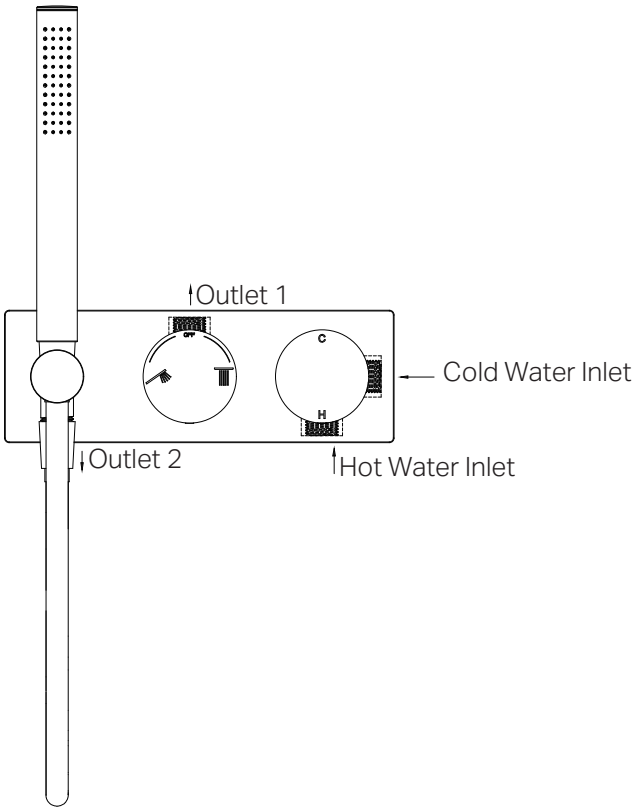

11.Attach the shower hose and hand shower, securing them in place.

12. Installation is now complete. Test for leaks.

Nero

Warranty Policy