Opal Pull Out Sink Mixer With Vegie Spray Function

Nero

Lead Free

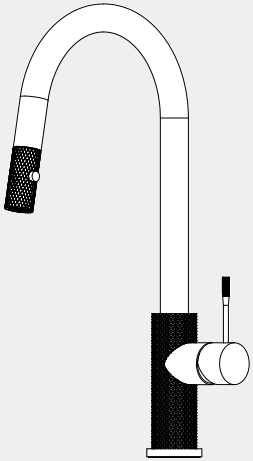

Versions:202511

Drawing

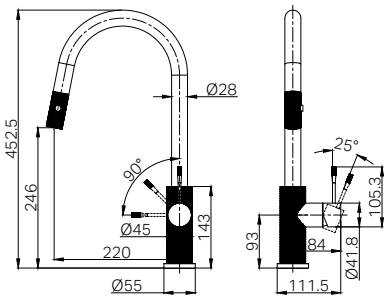

Specifications

Watermark License
WM-060073

Temperature Rating
Min 1˚C-Max 75˚C

Pressure Rating
Min 150kpa - Max 500kpa

Packaging Includes

1x Pull Out Sink Mixer Body
1x Base Ring
1x Counter Weight
1x Stabilizer
1x Installation Kit

Finish & SKU

Brushed Bronze
NR251908BZ

Graphite
NR251908GR

Brushed Gold
NR251908BG

Brushed Nickel
NR251908BN

*Dimensions are nominal measurements only.

Installation Instruction

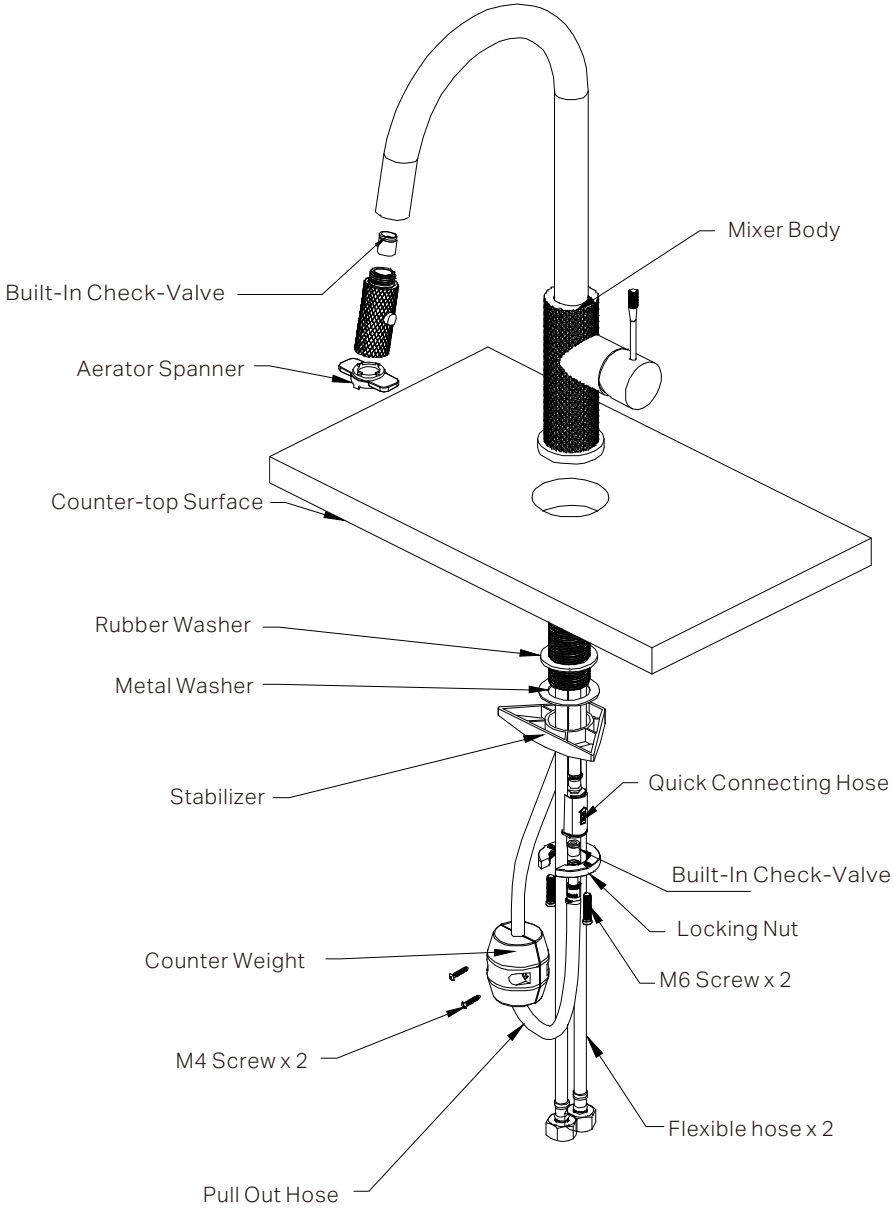

GENERAL INSTRUCTIONS:

- This product must be installed by a licensed plumber. Ensure that your plumbing installation conforms to the Australian/New Zealand Standard AS/NZS 3500.
- All pipework must be thoroughly flushed prior to the installation of the mixer. In-line filters must be fitted on both hot and cold supplies to prevent foreign particles from damaging the ceramic cartridge.
- All outlets used primarily for personal hygiene must deliver water at a safe temperature in accordance with regional regulations.

NOTE:

- Do not hydrostatic test the installation with this mixer installed. Damage to the ceramic cartridge may occur.
- Do not remove the ceramic cartridge from the mixer when installing.
- After installation, all connections must be checked for leaks.
- This mixer is not recommended for use in uncontrolled heating systems such as wet-backs or solar heating units unless a suitable tempering valve is fitted.
- If limited water flow is experienced, locate aerator and filter washers and clean away foreign material as required.
- It is the responsibility of the plumber to ensure a waterproof seal is achieved between the product and mounting surface. If in doubt about the quality of the seal, remove the product and reinstall.
- Dual non-return valve prevents cross-feeding and backflow.

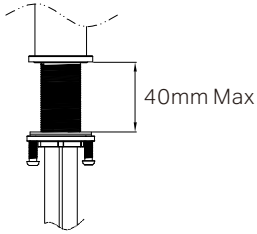

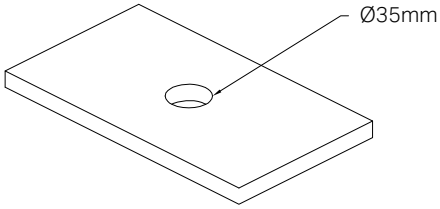

1. Pre-drill or create one hole with a diameter of 35mm at the proper location.

Please note that the thickness of the surface should be between 3-40mm.

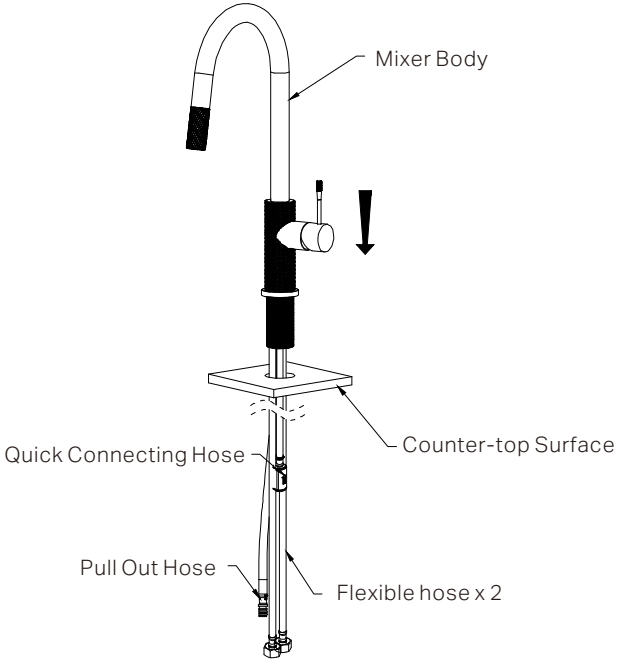

2. Pass base ring onto the bottom of mixer body, and place the mixer body and pass the flexible hoses, pull out hose and quick connecting hose through the hole in the counter-top. Ensuring the O-RING sits within the bottom groove of the base plate to prevent water leakage through the cabinet.

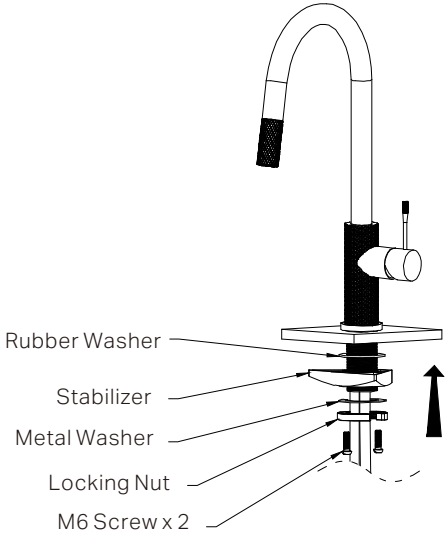

3. Install the rubber and metal washers, if a stabilizer is required,install the stabilizer after positioning the rubber washer.
Tighten the locking nut securely with the two M6 screws to ensure the mixer is firmly attached to the counter-top.
Avoid over tightening to prevent damage to the components.

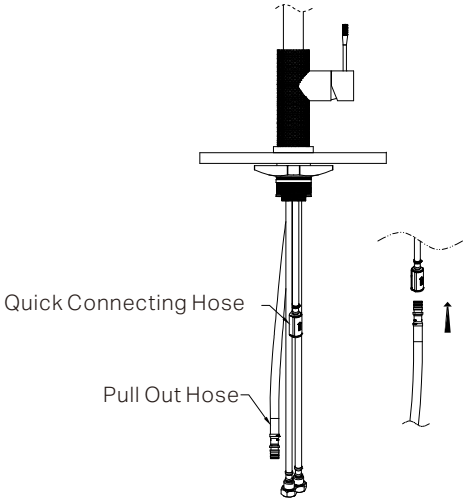

4. Connect pull out hose with quick connecting hose.

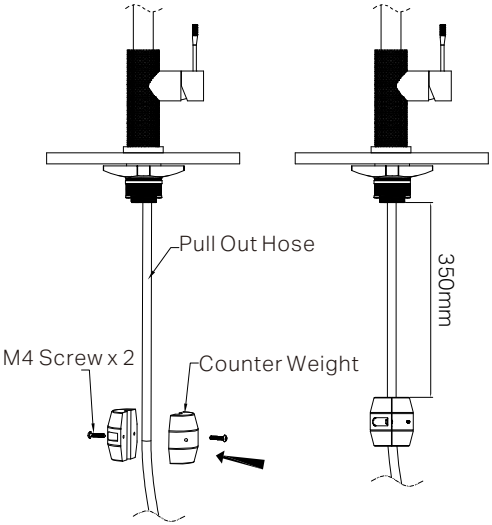

5. Install counter weight by tightening the screws, please note that the distance from counter weight to bottom of thread connector is

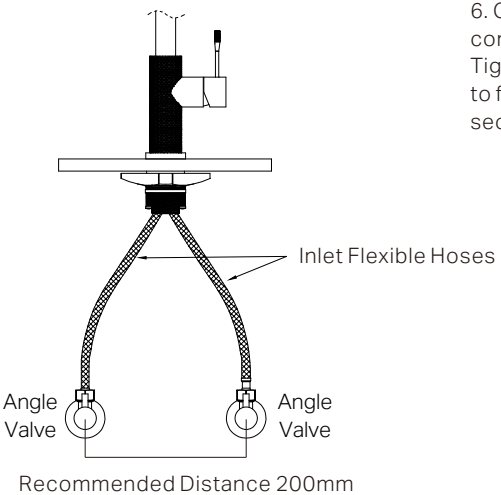

6. Connect the inlet flexible hoses to the corresponding hot and cold water supply valves. Tighten the female cone nuts by hand (according to flexible hose instruction), ensuring they are secure yet not overtightened to avoid thread

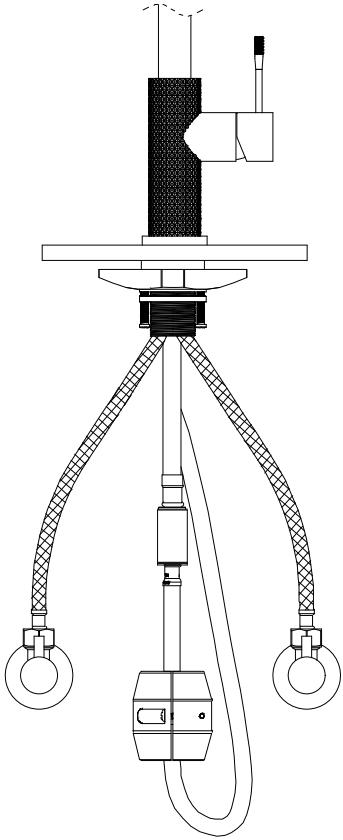

7. Check all connections for leaks. If any fittings are leaking, shut off the water as necessary to stop the leaks.
Contact the supplier for warranty claim. Refer to warranty page.

MAINTENANCE AND CARE:

- Regularly check the mixer and connections for signs of wear or leaks.
- Clean the tap with mild soapy water to maintain its appearance, avoiding harsh chemicals and abrasive materials that may damage the finish.

FINAL INSPECTION:

- Ensure the tap operates smoothly and that there are no leaks at the connections.
- Clean the area and the newly installed tap with a soft cloth to remove any installation residues.

3170154

Nero

Warranty Policy