Nero

Opal Twin Shower With Air Shower

Finish & SKU

Brushed Gold
NR251905bBG

Brushed Nickel
NR251905bBN

Specifications

Watermark License
WM-060093
Temperature Rating
Min 1°C-Max 75°C
Pressure Rating
Min 150kpa-Max 500kpa

Warranty

Features

- 3 function hand shower and 230mm exposure dome overhead shower
- One touch nozzle cleaning
- Height adjustable handset holder with metal slider
- Strong and durable,1.5m satin-smooth hose
- Easily switch from handset to overhead shower with the stylish water diverter
- Exposure round rail with built-in water delivery point
- Adjustable shower rail
- Top water inlet

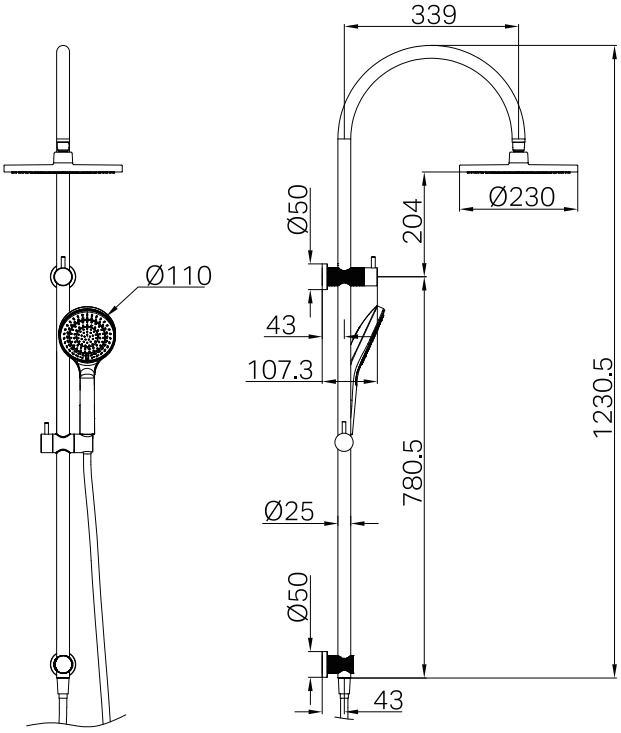

Maintenance And Care

- Regularly check the mixer and connections for signs of wear or leaks.
- Clean the tap with mild soapy water to maintain its appearance, avoiding harsh chemicals and abrasive materials that may damage the finish.

- Dimensions are nominal measurements only.