Round Twin Shower With Air Shower I

Nero

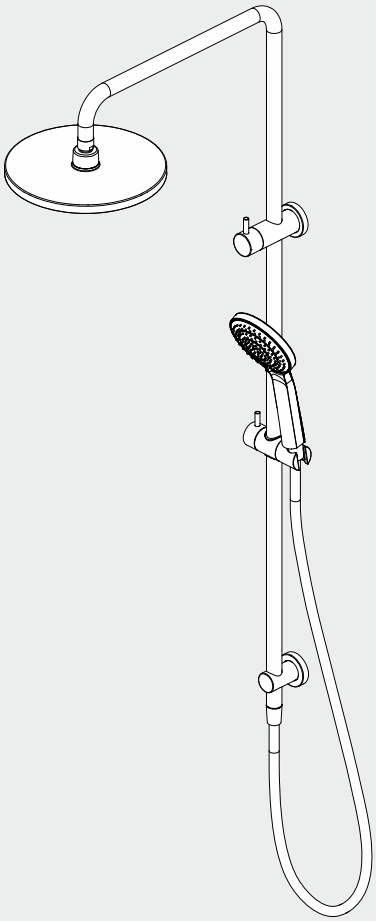

Versions:202406

Drawing

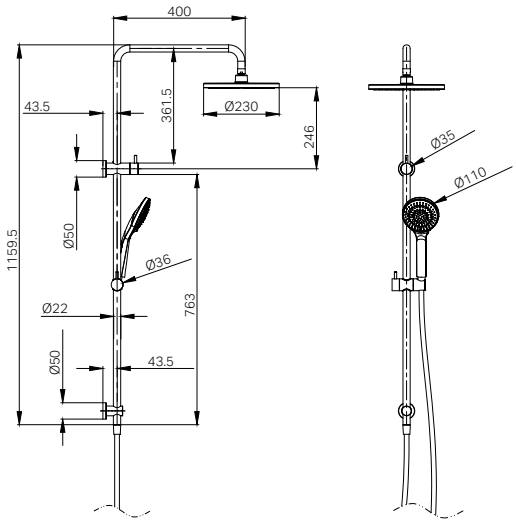

Specifications

Watermark License
WM-060093

Temperature Rating
Min 1˚C-Max 75˚C

Pressure Rating
Min 150kpa - Max 500kpa

Packaging Includes

1 x Shower Arm
1 x Shower Rail
1 x Shower Head(ABS)
1 x Hand Shower
(Built- In Dual-Check Valve)
1 x 1.5m PVC Hose
1 x Installation Kit

Finish & SKU

Chrome
NR250805d01CH

Brushed Nickel
NR250805d01BN

Matte Black
NR250805d01MB

Brushed Gold
NR250805d01BG

*Dimensions are nominal measurements only.
**Dual-check valve pre-installed.

Installation Instruction

GENERAL INSTRUCTIONS:

- This product must be installed by a licensed plumber. Ensure that your plumbing installation conforms to the Australian/New Zealand Standard AS/NZS 3500.
- All pipework must be thoroughly flushed prior to the installation of the shower. In-line filters must be fitted on both hot and cold supplies to prevent foreign particles from damaging the shower components.
- Ensure that all outlets used for personal hygiene deliver water at a safe temperature in accordance with regional regulations.
- Verify that the water pressure is within the recommended range for the shower to function properly.

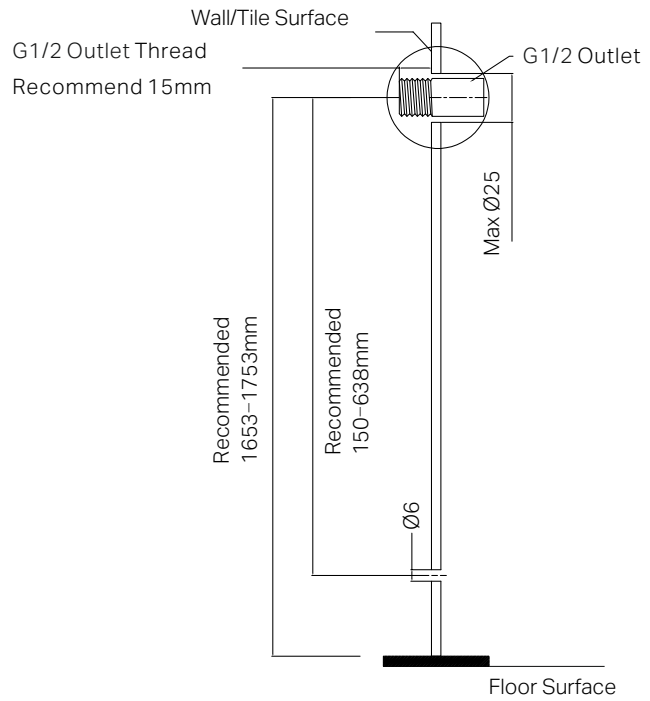

1. The recommended height for the water outlet is 1653-1753mm from the finished floor surface.
Ensure the outlet thread extends 15mm beyond the finished wall or tile surface. Trim the thread if necessary.
Drill a 6mm mounting hole 150-638mm below the center point of the outlet, as shown in the figure above.

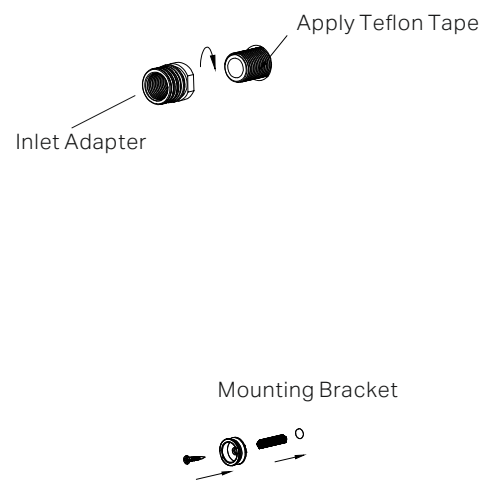

2. Apply PTFE tape to the outlet thread to ensure a watertight seal.
Screw the inlet adapter onto the outlet, and secure the mounting bracket to the wall using expansion plug and screw.

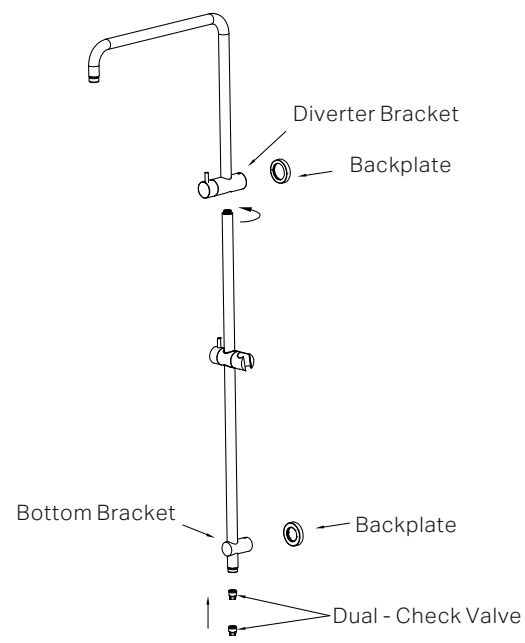

3. Insert the shower rail into the bottom of the shower arm and tighten it.
Slide the two backplates onto diverter bracket and bottom bracket.
Note: Dual-check valve are pre-installed in the shower rail.

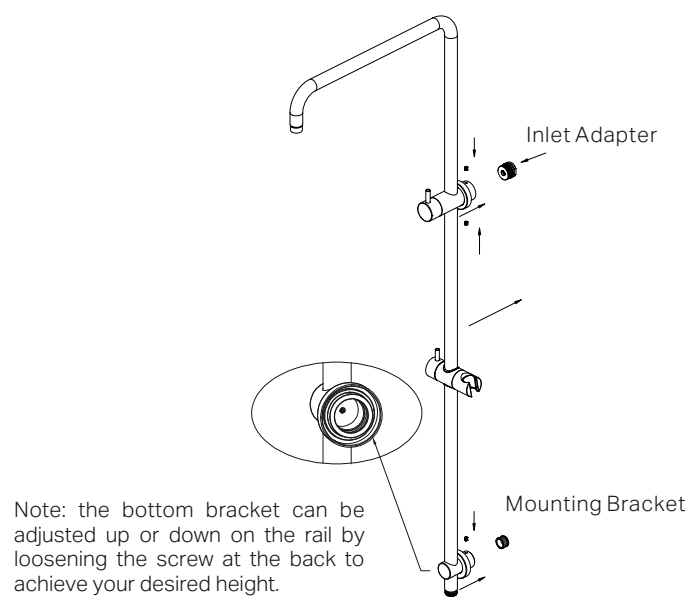

4. Position the shower rail assembly over the wall adaptors. Adjust the position of the bottom bracket to align with the mounting holes on the wall
Tighten grub screws firmly with allen key provided to secure the brackets.
Slide the two backplates against the wall/tile surface properly.

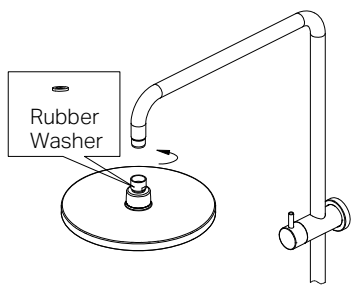

5. Screw the overhead shower into the shower arm,ensuring a rubber washer is in place for watertight seal.

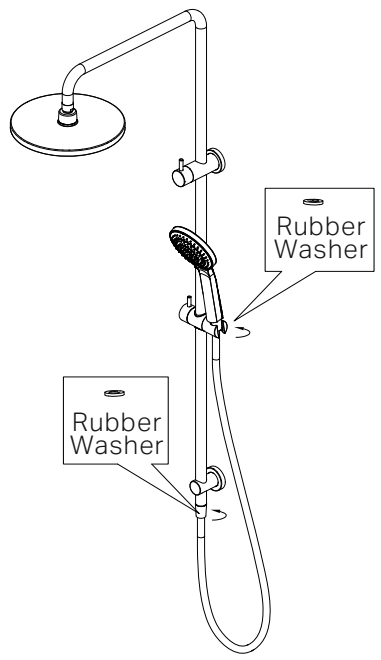

6. Attach the hand shower to the hose and connect the hose to the shower rail, ensuring that rubber washers are in place at both connection points to prevent leaks.
Confirm that all connections are securely tightened, then activate the drainage system and turn on the water supply.
Inspect all connections for any signs of leakage.

MAINTENANCE AND CARE:

- Regularly check the shower system and all connections for signs of wear or leaks.
- Clean all shower components with mild soapy water to maintain their appearance, avoiding harsh chemicals and abrasive materials that may damage the finish.
- Descale the showerhead, hand shower, and other components periodically to prevent mineral buildup, which can affect water flow and performance.
- Inspect and replace any worn-out parts, such as seals or washers, to ensure the longevity and efficiency of the shower system.
- Ensure all moving parts, such as adjustable brackets or sliding rails, are functioning smoothly and are properly lubricated if necessary.

FINAL INSPECTION:

- Ensure the shower operates smoothly and that there are no leaks at the connections.
- Verify that the water temperature and flow are consistent and as desired.
- Clean the area and the newly installed shower with a soft cloth to remove any installation residues.

3170925

Nero

Warranty Policy