Serenity Progressive Bath/Kitchen Mixer Edge Spout

Nero

Lead Free

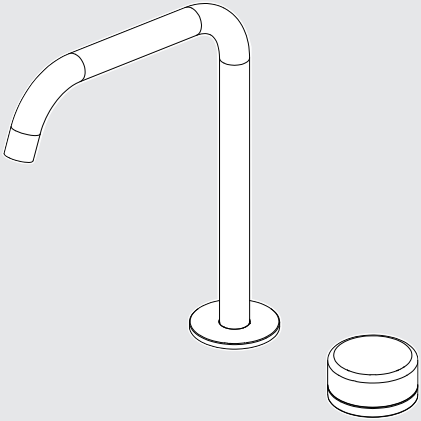

Versions:202412

Drawing

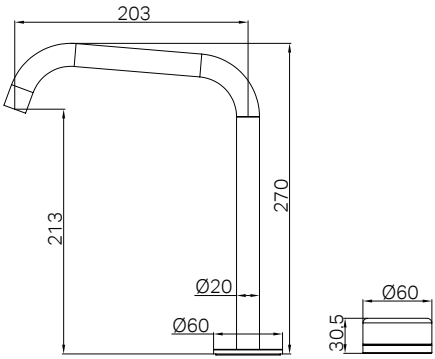

Specifications

Watermark License
WM-060073

Temperature Rating
Min 1˚C-Max 75˚C

Pressure Rating
Min 150kpa - Max 500kpa

Packaging Includes

1x Spout
1x Handwheel
1x Inlet Body
3x Flexible Hoses
1x Installation Kits

*Dimensions are nominal measurements only.

Finish & SKU

Chrome

Gun Metal

Brushed Bronze

Matte Black

Brushed Gold

Brushed Nickel

Serenity Progressive Bath/Kitchen Mixer Edge Spout With Carrara Handle

24E049BZ/ 24E049BG / 24E049BN/24E049GM / 24E049MB / 24E049CH

Serenity Progressive Bath/Kitchen Mixer Edge Spout With Verde Alpi Handle

24E050BZ/ 24E050BG / 24E050BN/24E050GM / 24E050MB / 24E050CH

Serenity Progressive Bath/Kitchen Mixer Edge Spout With Rome Travertine Handle

24E051BZ/ 24E051BG / 24E051BN/24E051GM / 24E051MB / 24E051CH

Serenity Progressive Bath/Kitchen Mixer Edge Spout With Arabescato Corchia Handle

24E052BZ/ 24E052BG / 24E052BN/24E052GM / 24E052MB / 24E052CH

Serenity Progressive Bath/Kitchen Mixer Edge Spout With Calacatta Viola Handle

24E053BZ/ 24E053BG / 24E053BN/24E053GM / 24E053MB / 24E053CH

Serenity Progressive Bath/Kitchen Mixer Edge Spout With Metal Handle

24E054BZ/ 24E054BG / 24E054BN/24E054GM / 24E054MB / 24E054CH

Serenity Progressive Bath/Kitchen Mixer Edge Spout With Marquina Black Handle

24E136BZ/ 24E136BG / 24E136BN/24E136GM / 24E136MB / 24E136CH

Installation Instruction

GENERAL INSTRUCTIONS:

- This product must be installed by a licensed plumber. Ensure that the installation complies with the Australian/New Zealand Standard AS/NZS 3500.
- All pipework must be thoroughly flushed prior to the installation of the mixer. In-line filters must be fitted on both hot and cold supplies to prevent foreign particles from damaging the ceramic cartridge.
- All outlets used primarily for personal hygiene must deliver water at a safe temperature in accordance with regional regulations.

NOTE:

- Do not hydrostatic test the installation with this mixer installed. Damage to the ceramic cartridge may occur.
- Do not remove the ceramic cartridge from the mixer when installing.
- After installation, all connections must be checked for leaks.
- This mixer is not recommended for use in uncontrolled heating systems such as wet-backs or solar heating units unless a suitable tempering valve is fitted.
- If limited water flow is experienced, locate aerator and filter washers and clean away foreign material as required.
- It is the responsibility of the plumber to ensure a waterproof seal is achieved between the product and mounting surface. If in doubt about the quality of the seal, remove the product and reinstall.
- The marble stone hand wheel crafted from natural marble. Each handle boasts unique variations in color, veining, and texture, making every piece one of a kind.

MAINTENANCE AND CARE:

- Regularly check the mixer and connections for signs of wear or leaks.
- Clean the tap with mild soapy water to maintain its appearance, avoiding harsh chemicals and abrasive materials that may damage the finish.
- Avoid contact with highly pigmented substances such as red wine, coffee, and ink, as they may cause permanent staining.

FINAL INSPECTION:

- Ensure the tap operates smoothly and that there are no leaks at the connections.
- Clean the area and the newly installed tap with a soft cloth to remove any installation residues.

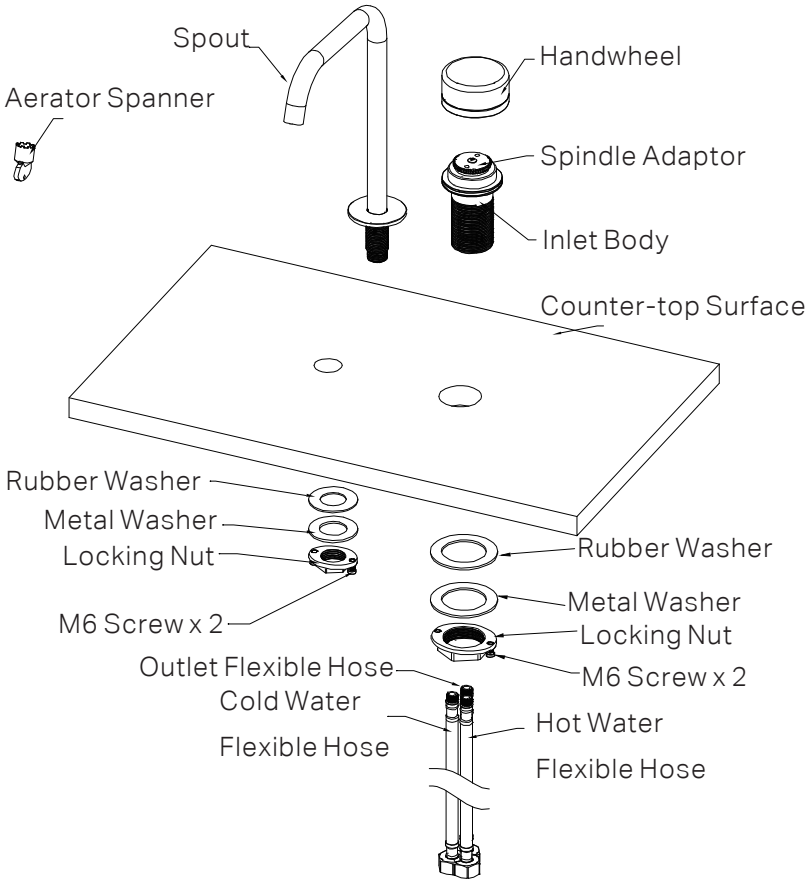

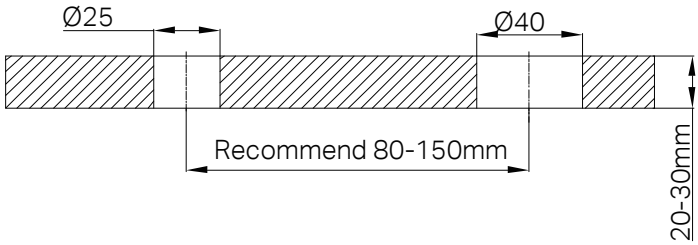

1. Ensure the counter-top hole dimensions meet the specifications (Ø25mm and Ø40mm diameter holes, with a counter-top thickness from 20-30mm).

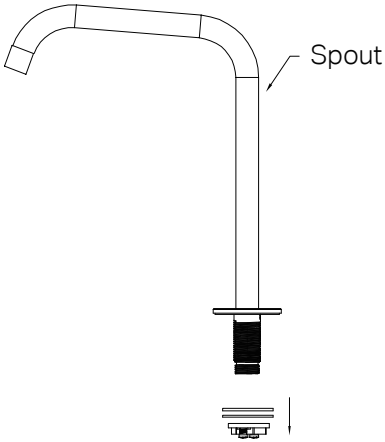

2. Remove the locking nut, metal washer, and rubber washer from the spout.

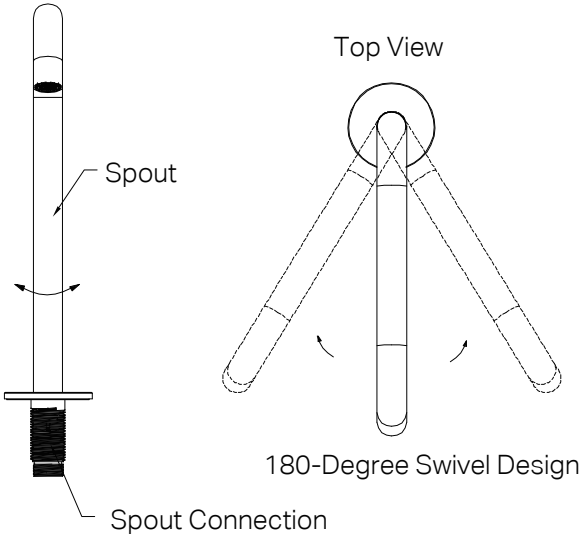

3. Rotate the spout to align it with the desired position, ensuring it is centered within its rotation range. Tighten the connection securely.

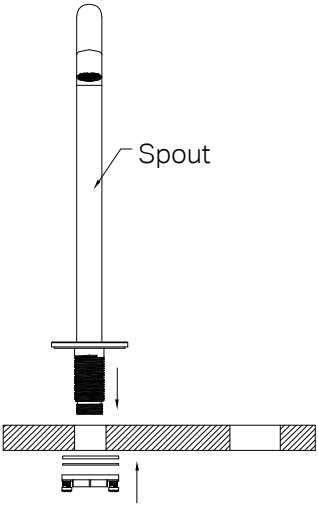

4. Insert the spout into the counter-top hole.
Reattach the rubber washer, metal washer, and locking nut underneath the counter-top.
Tighten the locking nut securely using the two M6 screws, ensuring the spout is firmly secured.

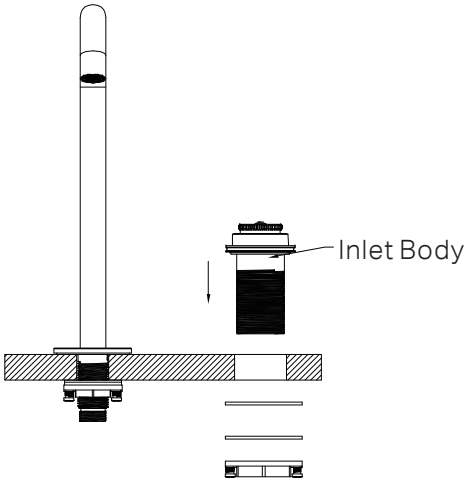

5. Remove the locking nut, metal washer, and rubber washer from the inlet body.
Insert the inlet body through the right-hand hole in the counter-top.
Reattach the rubber washer and metal washer, and secure the inlet body using the locking nut and two M6 screws. Do not overtighten.

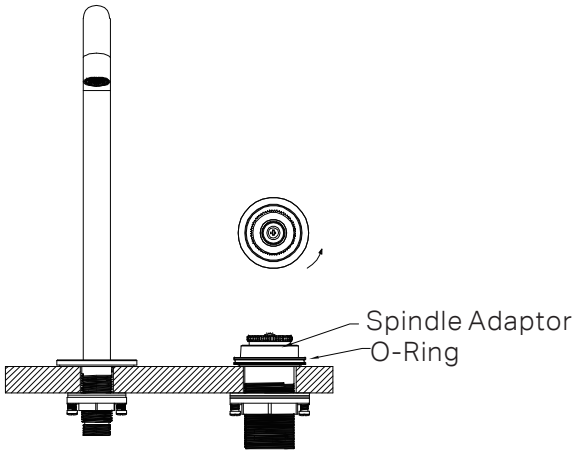

6. Apply lubrication evenly to the O-Ring. Refer to the diagram to identify the correct O-Ring position. Ensure the O-Ring is well-lubricated to prevent damage during installation.
For Metal Handwheel:
Rotate the spindle adaptor counterclockwise to its fully closed position, refer to the diagram for clarification.
For Marble Handwheel:
No adjustment to the spindle adaptor is necessary.

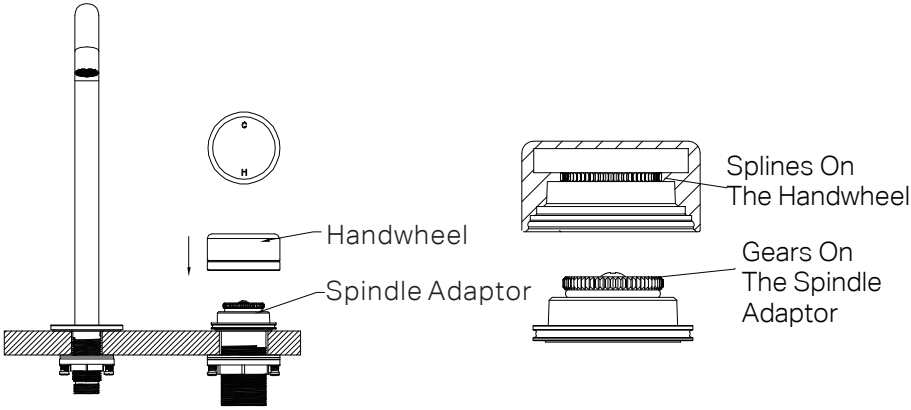

7. Align the handwheel with the spindle adaptor:
Ensure the splines on the underside of the handwheel align perfectly with the gears on the spindle adaptor, as shown in the above diagram. This alignment is crucial for proper functionality.
Secure the handwheel:
Once aligned, press the handwheel down firmly onto the spindle adaptor.
Tip:
For metal handwheel, ensure the handwheel installed as shown in above on the diagram.

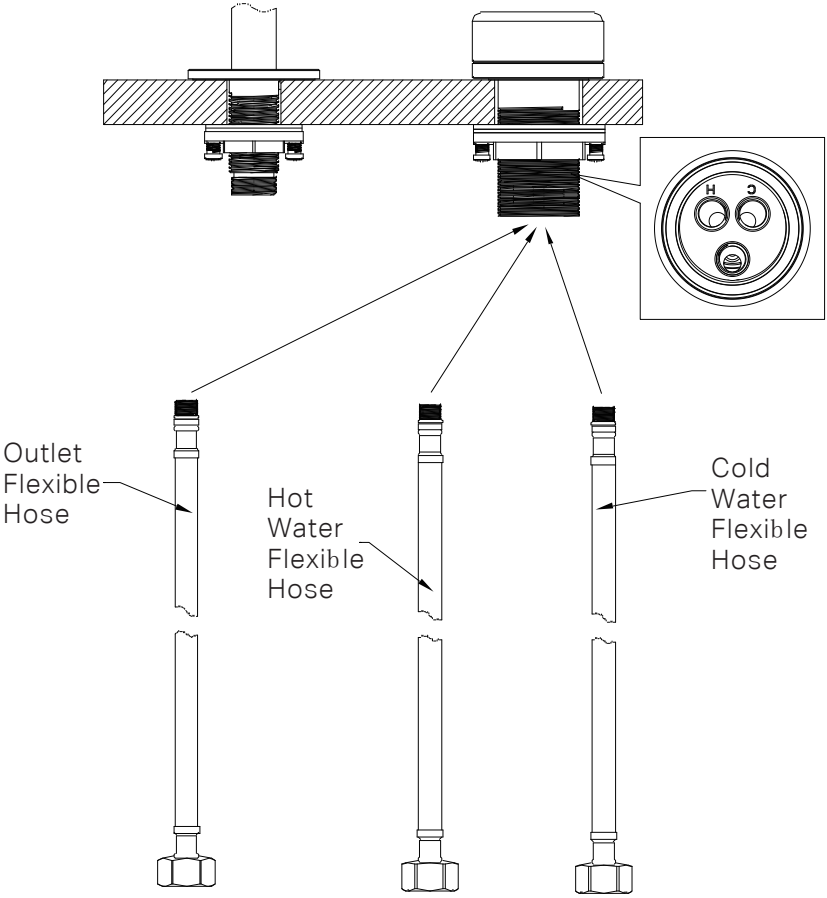

8. Attach the flexible hot and cold water hoses to the inlet body as per the diagram.
Connect the outlet flexible hose to both the spout and the inlet body.

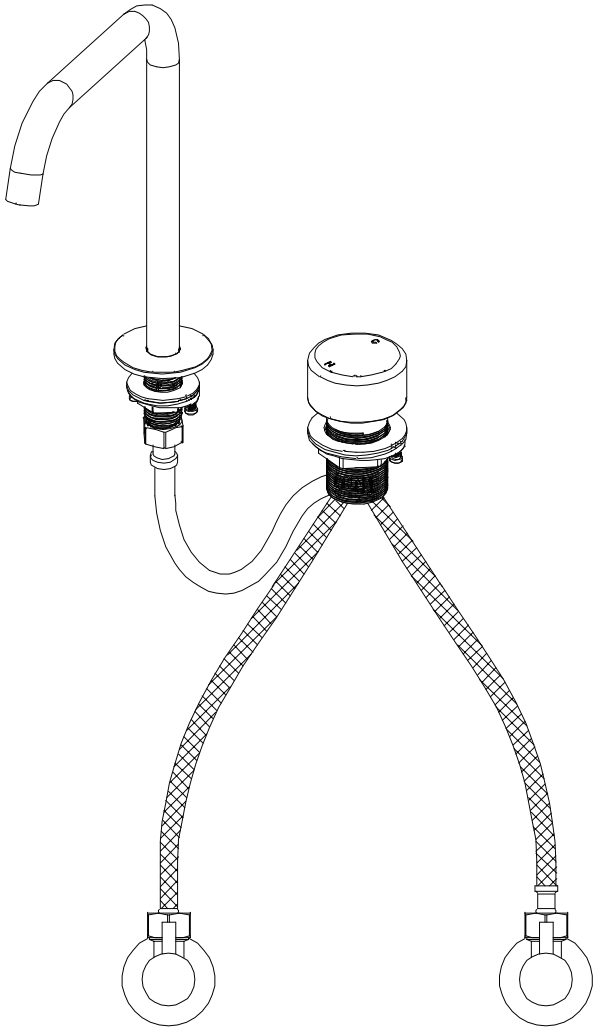

9. Connect the flexible hoses to the respective hot and cold water supply valves.
Hand-tighten the connections to avoid thread damage.

3170869

Nero

Lead Free