X Plus Basin Set

Nero

Lead Free

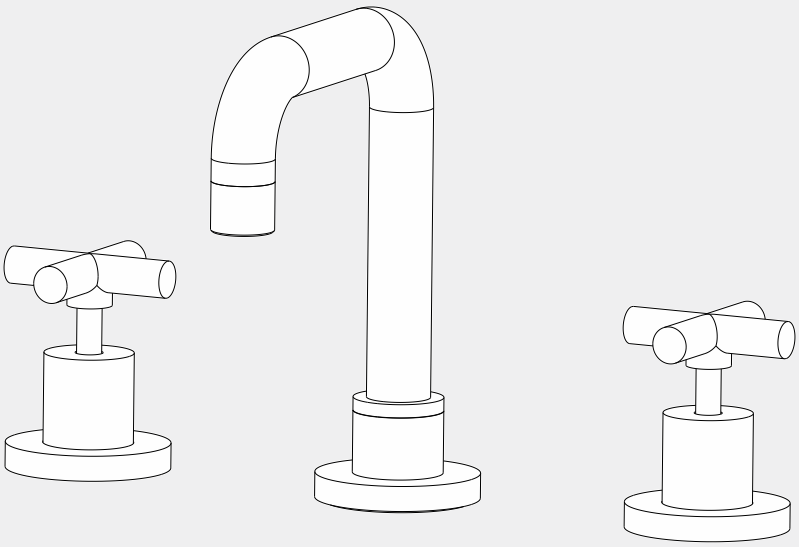

Versions:202508

Top/Back

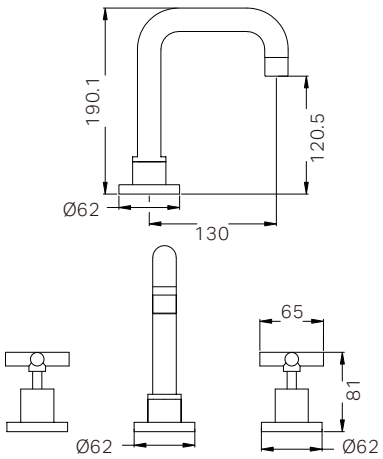

Specifications

Watermark License
WM-060073

Temperature Rating
Min 1˚C-Max 75˚C

Pressure Rating
Min 150kpa - Max 500kpa

Packaging Includes

1x Spout
2x Cross Handles
1x Mixing Tube

Finish & SKU

- **Matte Black** NR201601MB
- **Brushed Gold** NR201601BG
- **Brushed Nickel** NR201601BN

*Dimensions are nominal measurements only.

INSTALLATION INSTRUCTIONS

GENERAL INSTRUCTIONS:

- This product must be installed by a licensed plumber. Ensure that your plumbing installation complies with the Australian/New Zealand Standard AS/NZS 3500.
- All pipework must be thoroughly flushed prior to the installation of the mixer. In-line filters must be fitted on both hot and cold supplies to prevent foreign particles from damaging the ceramic cartridge.
- All outlets used primarily for personal hygiene must deliver water at a safe temperature in accordance with regional regulations.

NOTE:

- Do not perform hydrostatic testing with the mixer installed. Damage to the ceramic cartridge may occur.
- Do not remove the ceramic cartridge during installation.
- After installation, all connections must be checked for leaks.
- This mixer is not recommended for use in uncontrolled heating systems such as wet-backs or solar heating units unless a suitable tempering valve is fitted.
- If limited water flow is experienced, locate aerator and filter washers and clean away foreign material as required.
- It is the responsibility of the plumber to ensure a waterproof seal is achieved between the product and mounting surface. If in doubt about the quality of the seal, remove the product and reinstall.

PART NAMES

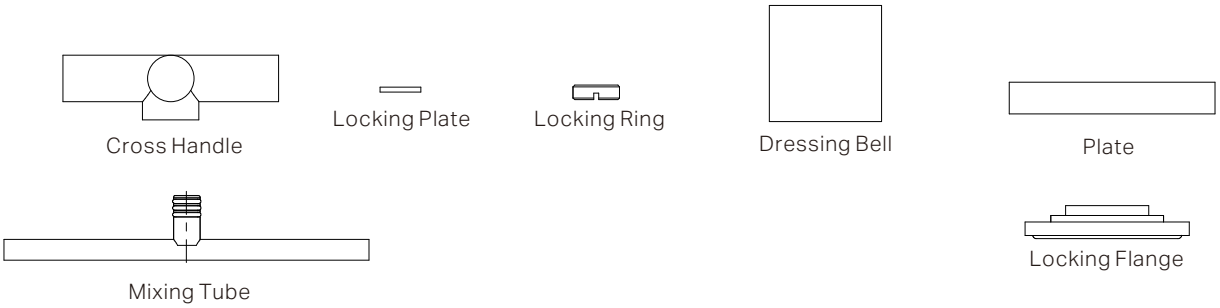

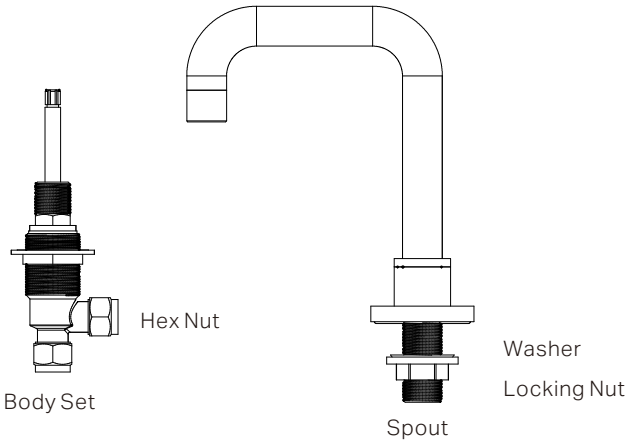

INSTALLATION STEPS

Hole Dimensions and Spacing

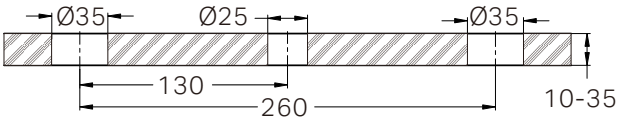

The diagram above shows the dimensions and spacing of the mounting holes.

Step01

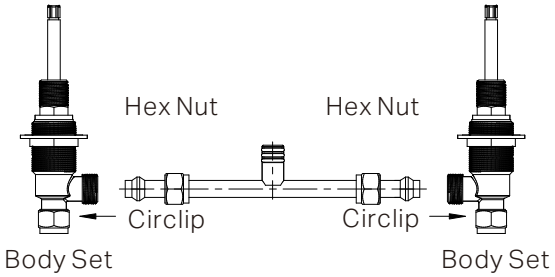

1. Remove the hex nuts and circlips from the two body sets. Slide them onto the mixing tube in the order shown in the diagram.
2. Insert both ends of the mixing tube into the body sets on each side, and screw on the hex nuts. Do not overtighten.

Step02

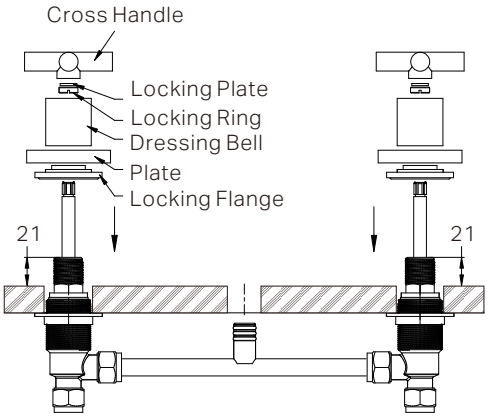

1. From underneath the benchtop, insert the assembled body from Step 01 in position, and adjust the height as shown in the diagram.
2. Slide the locking flanges onto the body sets on both sides, and tighten them firmly with a wrench.
3. Assemble all the other parts in the order as shown in the diagram.
4. Adjust the cross handle to the correct orientation, and tighten them securely with locking rings.

Step03

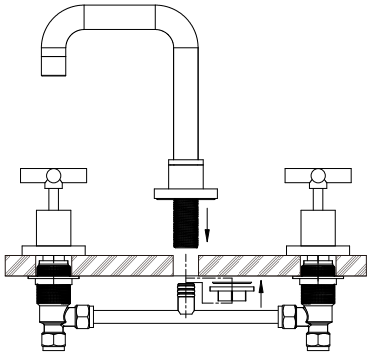

1. Remove the locking nut and washer from the spout thread, then reinstall them onto the spout thread from underneath the benchtop. Push the spout down firmly until the mixing tube is fully inserted into the spout thread.
2. Tighten the locking nut of the spout until the spout is firmly secured. Then, tighten the hex nuts on both body sets.

FINAL INSPECTION:

- Check all connections to ensure they are firmly secured and free of leaks, but not overtightened to avoid damaging any components.

MAINTENANCE AND CARE:

- Regularly check the mixer and connections for signs of wear or leaks.
- Clean the tap with mild soapy water to maintain its appearance, avoiding harsh chemicals and abrasive materials that may damage the finish.

3170013

Nero

Warranty Policy