York
Wall Mounted Pot Filler

Nero

Lead Free

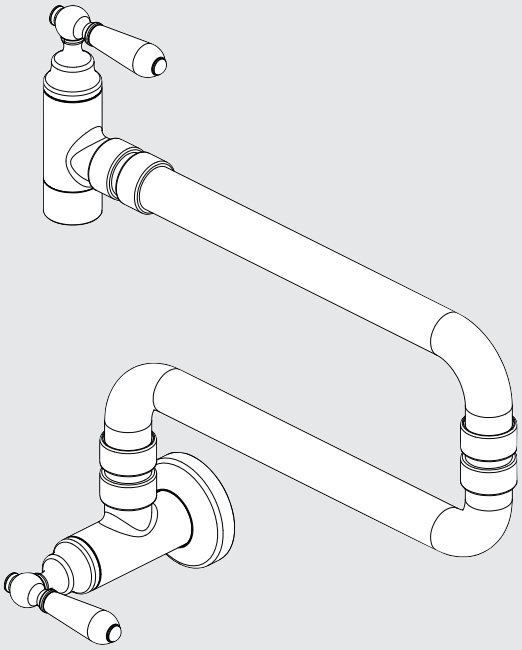

Versions:202506

Drawing

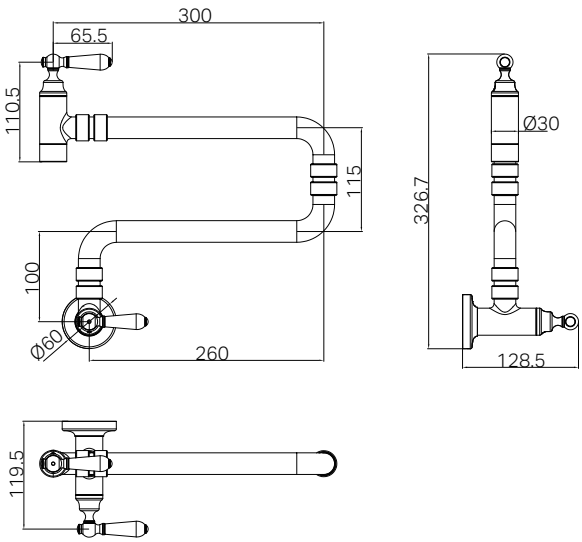

Specifications

Watermark License
WM-060073

Temperature Rating
Min 1˚C-Max 75˚C

Pressure Rating
Min 150kpa - Max 500kpa

Packaging Includes

1 x Pot Filler Body
1 x Installation Kit
1 x Plate

Finish & SKU

Chrome
NR692103cCH

Brushed Nickel
NR692103cBN

Matte Black
NR692103cMB

Aged Brass
NR692103cAB

*Dimensions are nominal measurements only.

Installation Instruction

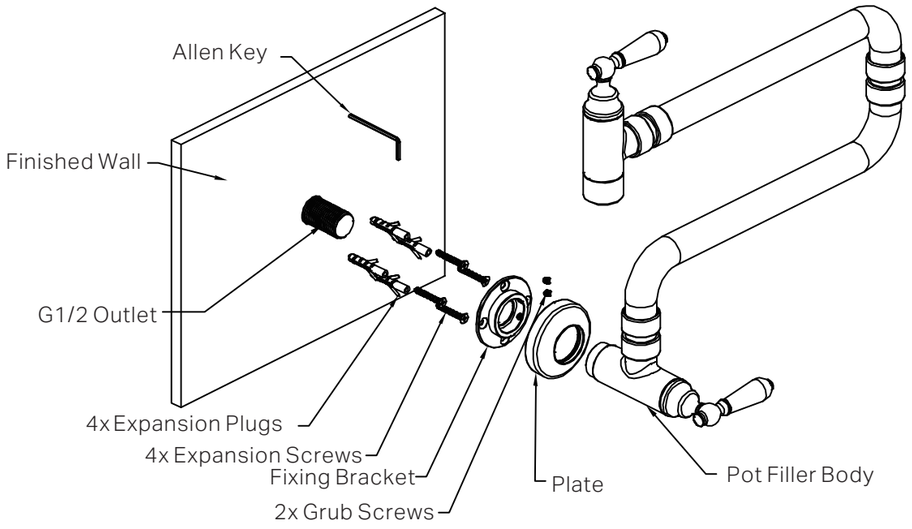

GENERAL INSTRUCTIONS:

- This product must be installed by a licensed plumber. Ensure that your plumbing installation conforms to the Australian/New Zealand Standard AS/NZS 3500.
- All pipework must be thoroughly flushed prior to the installation of the mixer. In-line filters must be fitted on both hot and cold supplies to prevent foreign particles from damaging the ceramic cartridge.
- All outlets used primarily for personal hygiene must deliver water at a safe temperature in accordance with regional regulations.

NOTE:

- Do not hydrostatic test the installation with this mixer installed. Damage to the ceramic cartridge may occur.
- Do not remove the ceramic cartridge from the mixer when installing.
- After installation, all connections must be checked for leaks.
- This mixer is not recommended for use in uncontrolled heating systems such as wet-backs or solar heating units unless a suitable tempering valve is fitted.
- If limited water flow is experienced, locate aerator and filter washers and clean away foreign material as required.
- It is the responsibility of the plumber to ensure a waterproof seal is achieved between the product and mounting surface. If in doubt about the quality of the seal, remove the product and reinstall.

MAINTENANCE AND CARE:

- Regularly check the mixer and connections for signs of wear or leaks.
- Clean the tap with mild soapy water to maintain its appearance, avoiding harsh chemicals and abrasive materials that may damage the finish.

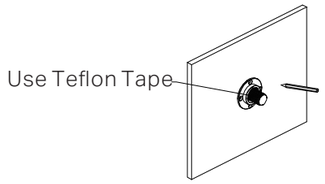

1. Ensure the G1/2 outlet thread is less than 30mm length, cut the outlet if required.
Wrap the G1/2 water outlet connection with Teflon tape to ensure a watertight seal.
Use the fixing bracket to make the four drilling points on the wall.
Use an electric drill with a 6mm drill bit to drill holes at the marked points.

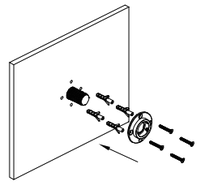

2. Insert the expansion plugs into the drilled holes using a hammer.
Place the fixing bracket onto the outlet and secure it firmly with expansion screws.

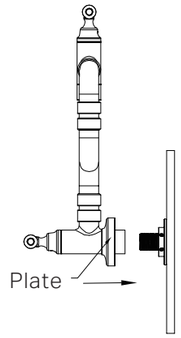

3. Push the plate back to the pot filler body, and screw the pot filler body onto the G1/2 outlet.

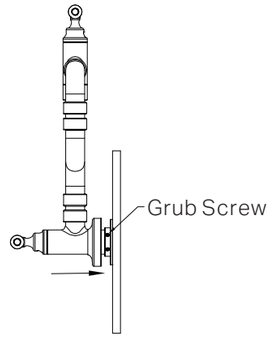

4. Screw the pot filler body by tightening the two grub screws using an Allen key, and push the plate onto the wall. (Ensure the screws are tightened firmly but do not over-tighten.)

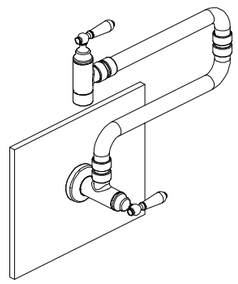

5. Turn on the water supply, and inspect all connections for any signs of leakage

FINAL INSPECTION:

- Ensure the tap operates smoothly and that there are no leaks at the connections.
- Clean the area and the newly installed tap with a soft cloth to remove any installation residues.

3170839

Nero

Warranty Policy