Zen SS316L Kitchen Mixer With Hand Spray

Nero

Lead Free

WATER RATING
www.waterrating.gov.au
4.5 litres per minute
In accordance with AS/NZS 6400
Licence No. I 225
FRIENDSHIP WARE SANITARY WARE LIMITED COMPANY

Versions:202506

Drawing

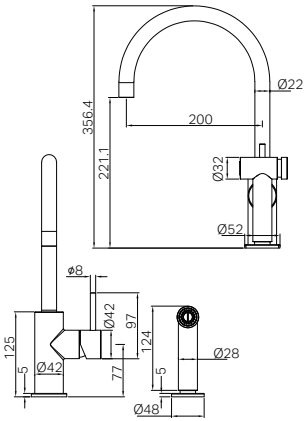

Specifications

Watermark License
WM-060073

Temperature Rating
Min 1˚C-Max 75˚C

Pressure Rating
Min 150kpa - Max 500kpa

Packaging Includes

1 x Kitchen Mixer
1 x Hand Spray
1 x Stabilizer
1 x Aerator Spanner
1 x Divertor Valve
1 x Counterweight
1 x Installation Kit

Finish & SKU

Brushed Bronze
NR162208BZ

Graphite
NR162208GR

Brushed Gold
NR162208BG

Brushed Nickel
NR162208BN

*Dimensions are nominal measurements only.

Installation Instruction

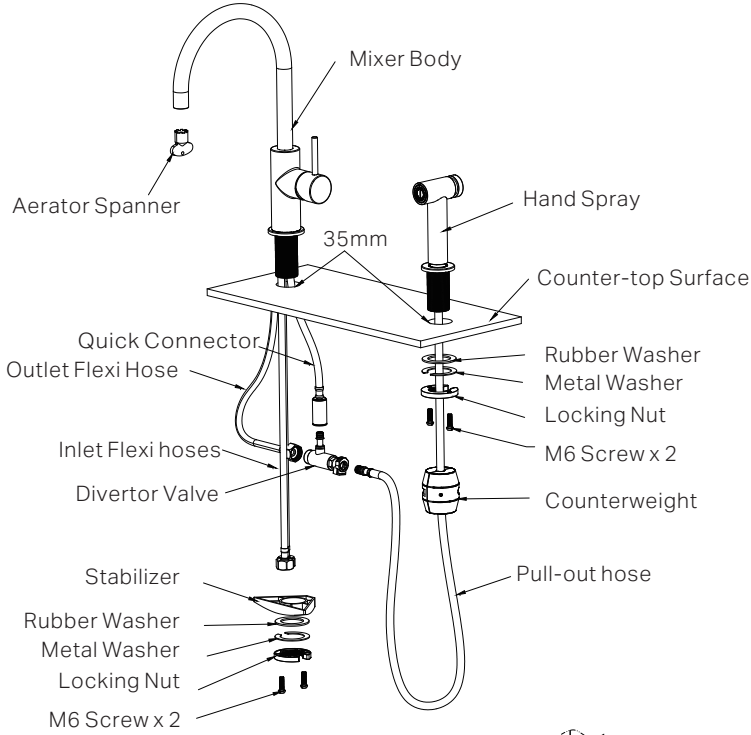

How To Use

Product Function Description:
The hand spray and spout are controlled through the mixer handle, which also adjusts the water temperature.

Switching to Hand Spray:
Pressing the switch button on the hand spray will divert the water flow from the spout to the hand spray. Pressing the switch button again will return the flow to the spout.

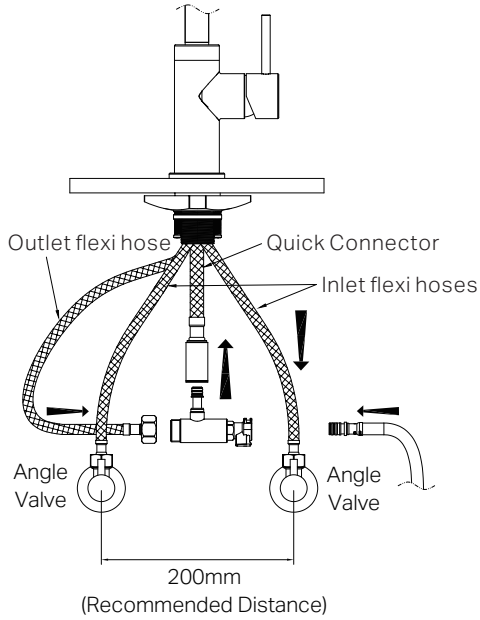

GENERAL INSTRUCTIONS:

- This product must be installed by a licensed plumber. Ensure that your plumbing installation conforms to the Australian/New Zealand Standard AS/NZS 3500.
- All pipework must be thoroughly flushed prior to the installation of the mixer. In-line filters must be fitted on both hot and cold supplies to prevent foreign particles from damaging the ceramic cartridge.
- All outlets used primarily for personal hygiene must deliver water at a safe temperature in accordance with regional regulations.

NOTE:

- Do not hydrostatic test the installation with this mixer installed. Damage to the ceramic cartridge may occur.
- Do not remove the ceramic cartridge from the mixer when installing.
- After installation, all connections must be checked for leaks.
- This mixer is not recommended for use in uncontrolled heating systems such as wet-backs or solar heating units unless a suitable tempering valve is fitted.
- If limited water flow is experienced, locate aerator and filter washers and clean away foreign material as required.
- It is the responsibility of the plumber to ensure a waterproof seal is achieved between the product and mounting surface. If in doubt about the quality of the seal, remove the product and reinstall.
- Dual non-return valve prevents cross-feeding and backflow.
- The flexible hoses are fixed and cannot be replaced with other hoses.

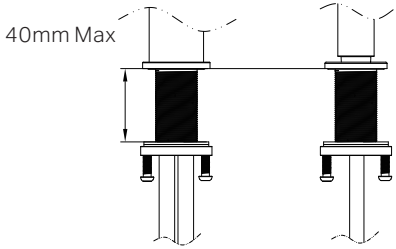

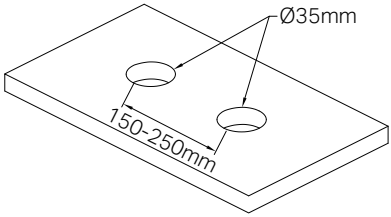

1. Pre-drill or create two holes with a diameter of 35mm at the proper location, the distance of two holes is 150-250mm.
Please note that the thickness of the surface should be between 3-40mm.

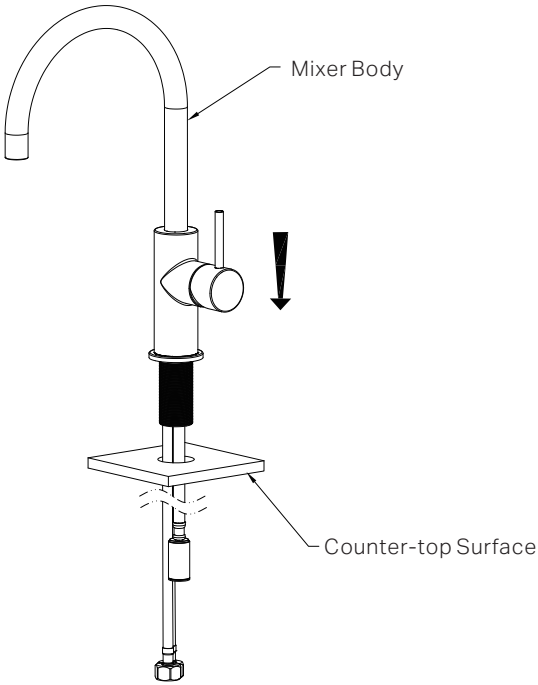

2. Place the mixer body and pass the flexi hoses and quick connector through the hole in the counter-top. Ensuring the O-RING sits within the bottom groove of the base plate to prevent water leakage through the cabinet.

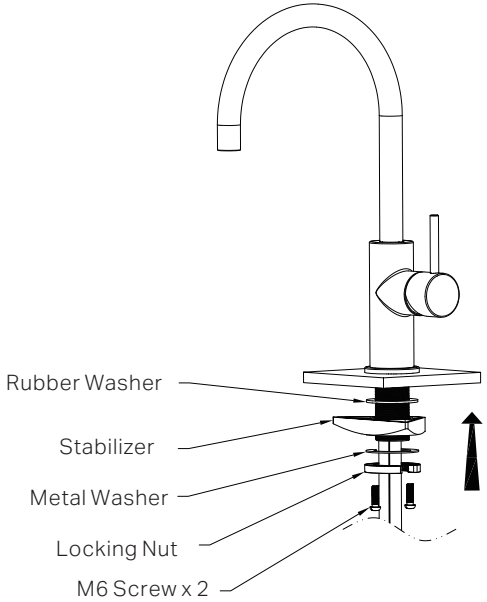

3. Install the rubber and metal washers, if a stabilizer is required,install the stabilizer after positioning the rubber washer.
Tighten the locking nut securely with the two M6 screws to ensure the mixer is firmly attached to the counter-top.
Avoid over tightening to prevent damage to the components.

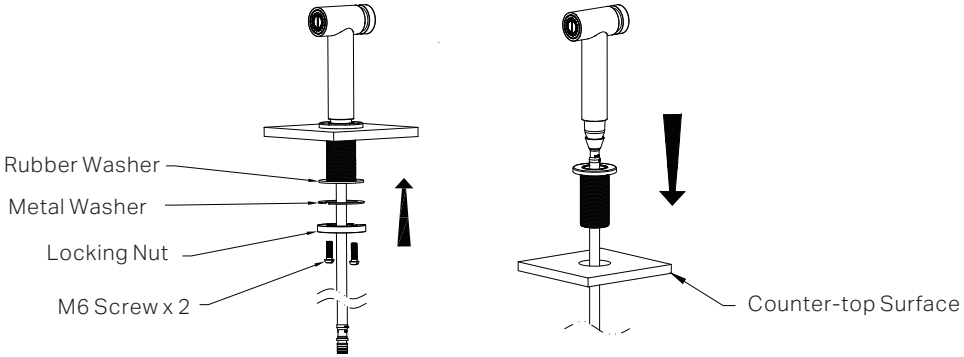

4. Place the hand spray and pass the pull-out hose through the hole in the counter-top. Ensuring the O-RING sits within the bottom groove of the base plate to prevent water leakage through the cabinet.

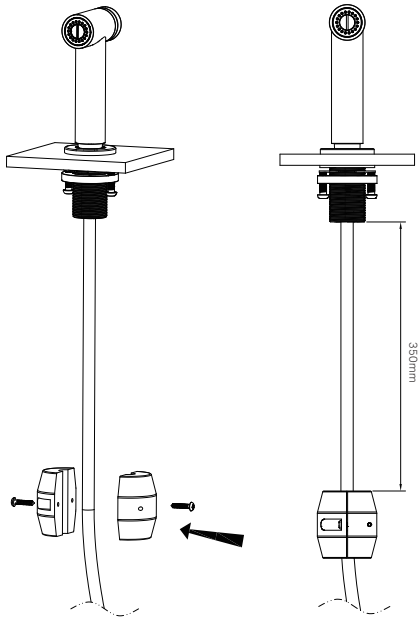

5. Install the rubber and metal washers, then tighten the locking nut securely with the two M6 screws to ensure the mixer is firmly attached to the counter-top.Avoid over tightening to prevent damage to the components.

6. Install counterweight by tightening the screws, please note that the distance from counter weight to hand spray is 350mm, as shown in figure.

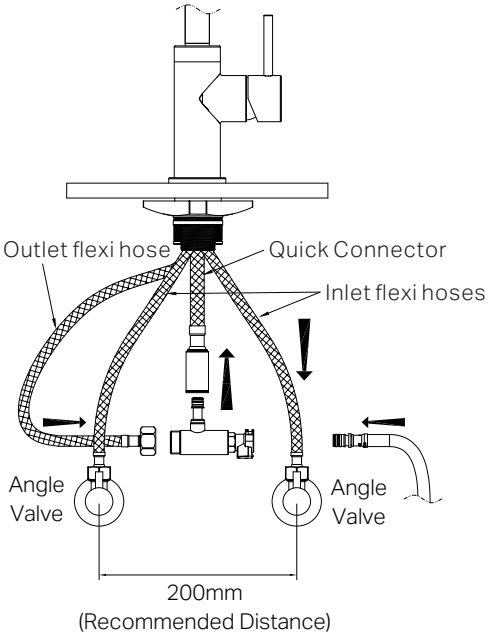

7. Connect the outlet flexi hose, quick connector, and pull-out hose to the diverter valve as shown in the image. Ensure the distance between the angle valves is 200mm, as recommended.

Connect the inlet flexi hoses to the corresponding hot and cold water supply valves. Tighten the female cone nuts by hand (according to flexi hose instruction), ensuring they are secure yet not overtightened to avoid thread damage.

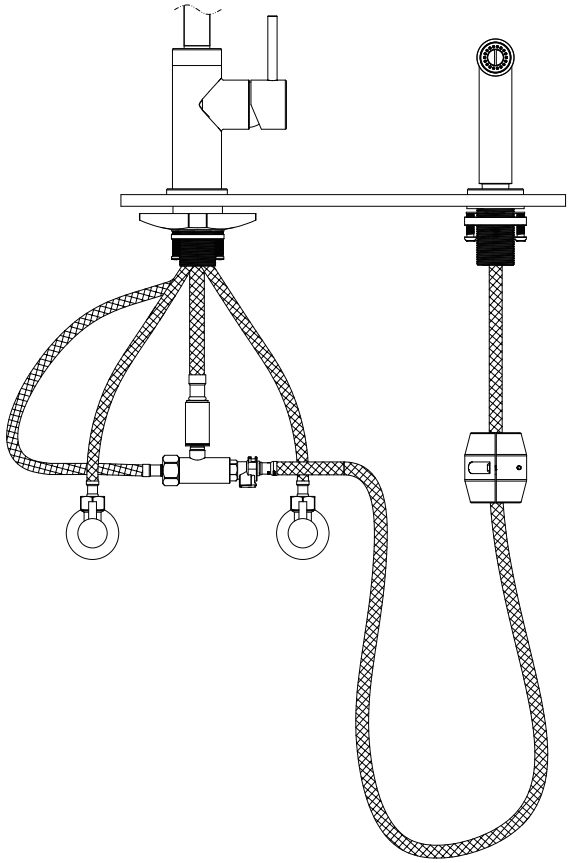

8. Check all connections for leaks. If any fittings are leaking, shut off the water as necessary to stop the leaks.
Contact the supplier for warranty claim. Refer to warranty page.

MAINTENANCE AND CARE:

- Regularly check the mixer and connections for signs of wear or leaks.
- Clean the tap with mild soapy water to maintain its appearance, avoiding harsh chemicals and abrasive materials that may damage the finish.

FINAL INSPECTION:

- Ensure the tap operates smoothly and that there are no leaks at the connections.
- Clean the area and the newly installed tap with a soft cloth to remove any installation residues.

Nero

Warranty Policy