Ablaze Mirrors

Lit Magnifying Mirror Range

Installation Guide

Please read these instructions carefully and in full before installation.
Hardwire installation should be carried out by a qualified electrician.

Thermogroup
That little bit extra...

ablaze
MIRRORS

Contents

Round Mirror Installation 3

Square Mirror Installation 4

Electrical Wiring Guide 5

Warranty 6

Technical Specifications 7

Contact Us 8

Installation:

1. Begin by determining the appropriate location and height. We recommend approximately 150cm from the floor if the mirror is to be used while standing, and 120cm from the floor if used while seated.
2. Remove the unit from its packaging and lay it carefully on a stable surface on top of the product bag so that it does not get scratched.
3. Remove nuts A and B from screws C and D. Separate mounting plate E from face plate F (see diagram below).
4. Using mounting template E determine the exact location for the magnifying mirror and mark this onto the wall.
5. Caution: Check the internal wall location for structural strength. Injury to people or damage to the mirror and/or mounting surface may result if mirror is pulled from the surface. To limit the likelihood of such injury or damage, mount the mirror on a structural wall material that is sound.
6. Drill holes and insert the wall plugs provided then proceed to mount bracket E to the wall.
7. For hardwired models refer to wiring instructions on page 5.
8. Lift the magnifying mirror and slide screws C and D back through the face plate and fasten in position with nuts A and B and ensure these are tight.
9. For exposed wired (plug-in) models you can now plug the magnifying mirror directly into a power point.

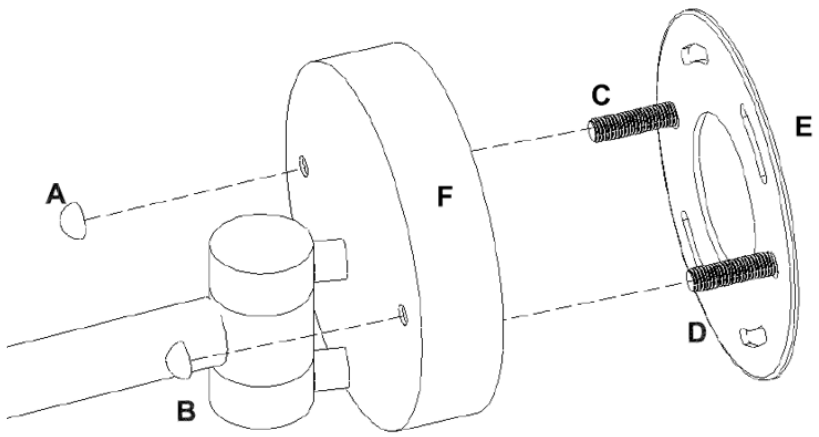

KEY:
A – Nut
B – Nut
C – Screw
D – Screw
E – Mounting Plate
F – Face Plate

Installation:

1. Begin by determining the appropriate location and height. We recommend approximately 150cm from the floor if the mirror is to be used while standing, and 120cm from the floor if used while seated.
2. Remove the unit from its packaging and lay it carefully on a stable surface on top of the product bag so that it does not get scratched.
3. Remove screws A and B from the face plate using a Philips head screw driver. Separate mounting plate C from face plate D. (See diagram below.)
4. Using mounting template C determine the exact location for the magnifying mirror and mark this onto the wall.
5. Caution: Check the internal wall location for structural strength. Injury to people or damage to the mirror and/or mounting surface may result if mirror is pulled from the surface. To limit the likelihood of such injury or damage, mount the mirror on a structural wall material that is sound.
6. Drill holes and insert the wall plugs provided then proceed to mount bracket C to the wall.
7. For hardwired models refer to wiring instructions on page 5.
8. Lift the magnifying mirror back onto mounting plate C so that place plate D is now sitting flush against the wall.
9. Refit screws A and B and tighten to hold the magnifying mirror firmly to the mounting plate.
10. For exposed wired (plug-in) models you can now plug the magnifying mirror directly into a power point.

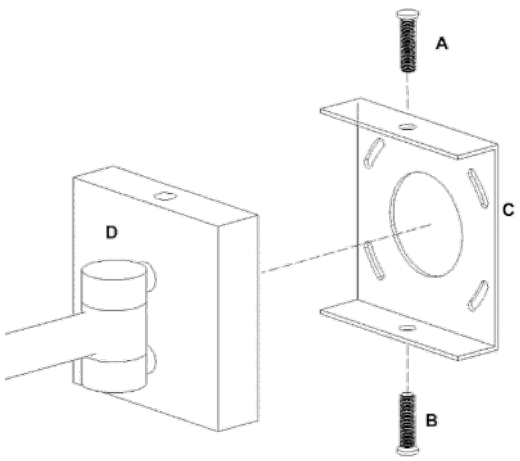

KEY:
A – Screw
B – Screw
C – Mounting Plate
D – Face Plate

Wiring Instructions

1. Ensure you have 240V supply cable located at the centre of where you wish to mount your mirror.
2. Ensure the power is switched off before carrying out any electrical work.
3. Ensure you have a hole into the wall large enough to fit the connector box on the magnifying mirror.
4. Connect the supply cable into the connector box as shown in diagram and tighten firmly – it is important to make sure you earth the unit.
5. We recommend taping the connection box with electrical tape for added strength.
6. You may now continue to install the magnifying mirror.

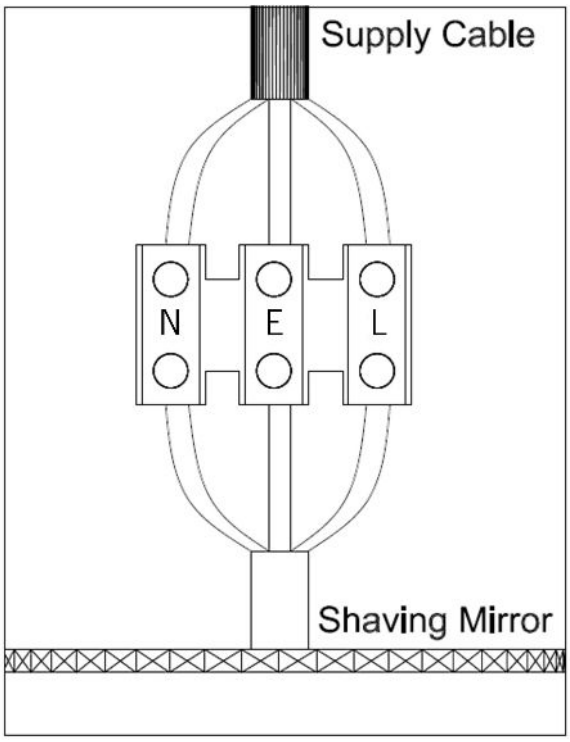

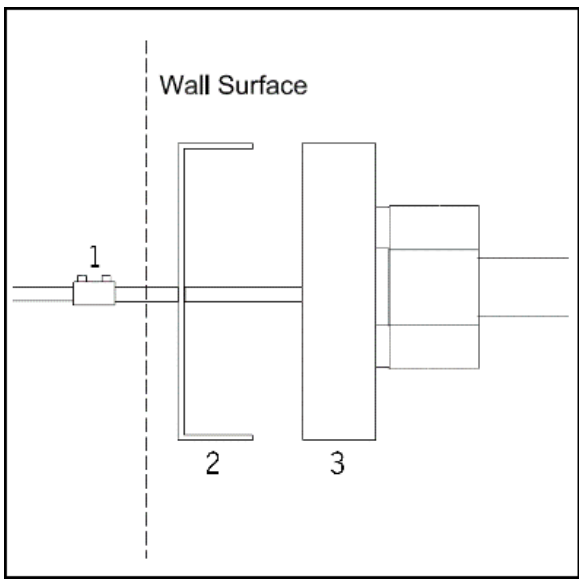

KEY:
1. Connection Box
2. Mounting Plate
3. Magnification Mirror

ALL ELECTRICAL WORK IS TO BE CARRIED OUT BY A QUALIFIED ELECTRICIAN IN ACCORDANCE WITH ELECTRICAL GUIDELINES

THIS UNIT IS 240V AT THE BASE SO IT NEEDS TO BE INSTALLED IN THE APPROPRIATE ZONE (OUTSIDE OF ZONE 1) AT THE DISCRETION OF THE ELECTRICIAN

Warranty

Thermogroup covers all its products with a satisfaction guarantee. In addition, Thermogroup will supply a replacement product where a fault is shown to be caused by faulty manufacture, materials, or workmanship providing the goods have been installed correctly and according to the installation instructions.

For any manufacturing faults occurring within 12 Months of purchase and requiring a licensed electrician to replace, Thermogroup will arrange troubleshooting and replacement on behalf of the customer. For any manufacturing faults outside of this initial 12 Month period or not requiring an electrician to replace, Thermogroup will supply parts only for the duration of the advertised warranty period and will not cover removal or installation costs.

All the Ablaze Magnifying Mirrors have a 1 Year warranty. To claim the warranty, repair or service the customer must provide purchase invoice/ receipt and any other relevant details.

If the product develops a fault within the warranty period due to normal wear and tear, Thermogroup at its discretion will recognise whether it's a faulty product or not. If it is impossible or not economical for the manufacturer to repair the product, the manufacturer will replace the faulty product with a new unit of the same model or if there is no stock available of the same model as the product, the manufacturer will replace the product with a new unit of a similar size. No responsibility can be taken for altered dimensions and lining up of existing holes.

The repair/ replacement service offered within the warranty period only covers faults developed from the manufacturer's errors. Any damage caused by improper use or carelessness or incorrect wiring is not covered. Thermogroup is not responsible for any monetary loss or injuries caused by improper use of this product.

Our goods come with guarantees that cannot be excluded under the Australian Consumer Law. You are entitled to a replacement or refund for a major failure and compensation for any other reasonably foreseeable loss or damage. You are also entitled to have the goods repaired or replaced if the goods fail to be of acceptable quality and the failure does not amount to a major failure.

Mirror Care

- Your mirror takes minimum maintenance for years of service. When cleaning the mirror, ensure that you have unplugged it from the power outlet or turned the unit off.
- Clean the mirror with any glass cleaner or a 70-30% water to methylated spirits mixture. Do not use any abrasive cleaner on the mirror frame.
- Do not switch on the mirror until you are certain it is completely dry.
- Do not submerge mirror in water or use excessive amount of water for cleaning purposes. This appliance is intended for household use.
- To store the mirror, use original packaging.
- If the mirror becomes inoperable, do not attempt to repair it yourself. Refer to a qualified electrician.

Technical Specifications

STOCK NO.	SHAPE	FINISH	LIGHTING COLOUR	MAGNIFICATION	WIRING	SIZE (MM)
L252CSMC	Round	Chrome	Cool	3X	Concealed	250 ø
L252CSME	Round	Chrome	Cool	3X	Exposed	250 ø
L253CSMC	Round	Chrome	Warm	3x	Concealed	250 ø
L255CSMC	Round	Chrome	Cool	5x	Concealed	250 ø
L255CSME	Round	Chrome	Cool	5x	Exposed	250 ø
L252CSMCB	Round	Matt Black	Cool	3x	Concealed	250 ø
L252CSMCBB	Round	Brushed Brass	Cool	3x	Concealed	250 ø
L252CSMCBN	Round	Brushed Nickel	Cool	3x	Concealed	250 ø
L155CSMC	Round	Chrome	Cool	1 and 5x	Concealed	200 ø
L155CSMCB	Round	Matt Black	Cool	1 and 5x	Concealed	200 ø
L155CSMCBN	Round	Brushed Nickel	Cool	1 and 5x	Concealed	200 ø
L258CSMC	Round	Chrome	Cool	1 and 8x	Concealed	200 ø
L258CSME	Round	Chrome	Cool	1 and 8x	Exposed	200 ø
LS205CSMC	Square	Chrome	Cool	3x	Concealed	200x200
LS205CSME	Square	Chrome	Cool	3x	Exposed	200x200
LS205CSMCB	Square	Matt Black	Cool	3x	Concealed	200x200

Thermogroup

That little bit extra...

Contact Us

Phone: 1300 368 631 | Technical Helpline: 1300 989 464
sales@thermogroup.com.au | www.thermogroup.com.au