TURNER HASTINGS

1300 00 2284
www.turnerhastings.com.au
service@turnerhastings.com.au

Cuisine 30 x 46 Inset / Undermount Fine Fireclay Matte Black Sink



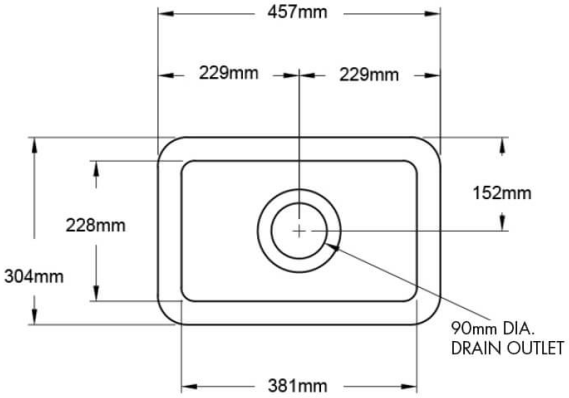

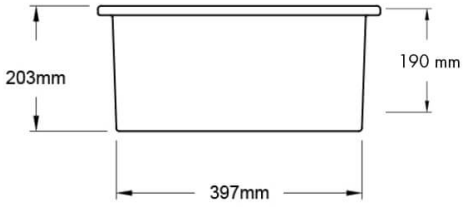

Specifications

- Material: Fine Fireclay
- Finish: Matte Black
- Waste outlets included: 90x50mm Stainless
- Product weight: 13kg
- Steel Basket Wastes
- Mounting options: Inset & Undermount
- Capacity: 17L
- Internal depth: 175mm
- Approx. internal radius: 15 mm
- Approx. external radius: 45 mm
- Suitable for use with food waste disposer – we recommend purchase of an extended flange and a model with anti-vibration collar
- Note: Fine Fireclay is a natural product and therefore subject to variations. This should be seen as a quality that adds to its unique natural beauty. Variations +/- 2% to the specifications are common and acceptable and are within industry tolerance. We always recommend the cabinet maker and stone provider has the actual sink with them to measure before making cabinetry or cutting stone. For more information please visit our Installation Care & Warranty page or Contact Us.

Product Options

CU30FS-MB: Cuisine 30 x 46 Inset / Undermount Fine Fireclay Matte Black Sink

Warranty

For peace of mind, Turner Hastings offers the following warranty on this product and its components:

Fine fireclay - Lifetime

For more details, click here to refer to our warranty page.

BATHROOM | KITCHEN | LAUNDRY LUXURY FOR A LIFETIME