TURNER HASTINGS

1300 00 2284
www.turnerhastings.com.au
service@turnerhastings.com.au

Novi 60 x 46 Fine Fireclay Matte Black Farmhouse Butler Sink



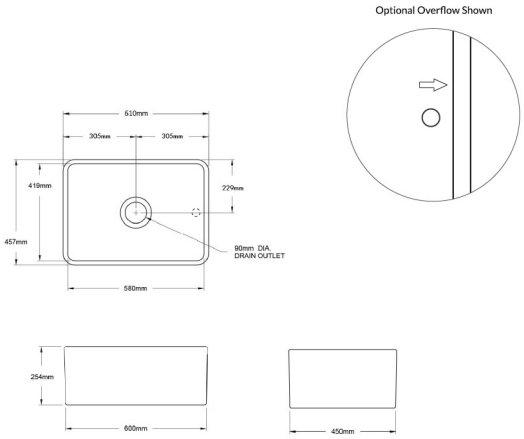

Specifications

• Material: Fine Fireclay
• Finish: Matte Black
• Waste outlets included: 90x50mm Stainless Steel Basket Wastes
• Product weight: 30kg
• Mounting options: Butler (front showing), Counter Top (glazed on all 4 sides), Under Counter (shelving required as shown in image)
• Capacity: 51L
• Internal depth: 210mm
• Approx. external radius: 45 mm
• Suitable for use with food waste disposer – we recommend purchase of an extended flange and a model with anti-vibration collar
• This sink is reversible, so it can be installed with flat or ribbed/farmhouse side facing out.
• Overflow is always positioned on the side of the sink – never at the back – due to the reversible design. This is intentional and ensures compatibility whether you choose the flat or ribbed front. This is not including the Novi 75, which has the overflow on the long flat side so can only be displayed ribbed side.
• Note: Fine Fireclay is a natural product and therefore subject to variations. This should be seen as a quality that adds to its unique natural beauty. Variations +/- 2% to the specifications are common and acceptable and are within industry tolerance. We always recommend the cabinet maker and stone provider has the actual sink with them to measure before making cabinetry or cutting stone. For more information please visit our Installation, Care & Warranty page, or Contact Us.

Product Options

NO60SSG: Novi 60 x 46 Stainless Steel Grid

NO60FS-MB: Novi 60 x 46 Fine Fireclay Matte Black Farmhouse Butler Sink

NO60FS-MB-OF: Novi 60 x 46 Fine Fireclay Matte Black Farmhouse Butler Sink With Overflow

BATHROOM | KITCHEN | LAUNDRY LUXURY FOR A LIFETIME

Warranty

For peace of mind, Turner Hastings offers the following warranty on this product and its components:

Fine fireclay - Lifetime

For more details, click here to refer to our warranty page.