ZANDA
COMMERCIAL HARDWARE

Data Sheet

Product Code: 10072

MORE THAT JUST QUALITY — **AN EXPERIENCE"**

ASTRON

OXFORD

INTEGRATED PRIVACY SET

Component: 1 Pair Integrated Privacy Set
(with push button on rose) & 1x Integrated Privacy Latch

Description:

- 15-Year Warranty: Futura Door Furniture is covered for 15 years internally and 10 years externally. If defective, Zanda will replace it for free.
- Ergonomic design for user comfort
- Modern European design
- Ideal for elderly
- Backsets are 60mm. Specify if otherwise.
- Suit domestic and light commercial application
- Suits 25mm hole size

Available Set:

- Lever Set
- Passage Set
- Separate Privacy Set
- Integrated Privacy Set
- Dummy Set
- Entrance Set

Available Finish:

- Brushed Nickel / Chrome Plate
- Graphite Nickel
- Matt Black
- Satin Brass

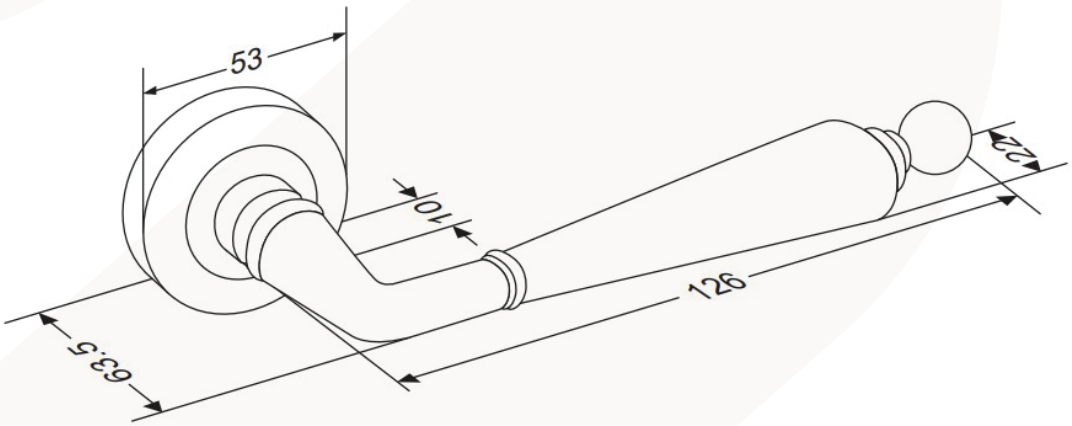

Note: Measurements are in mm

1 300 926 321
sales@zanda.com.au
www.zanda.com.au

ZANDA
COMMERCIAL HARDWARE

Data Sheet

Product Code: 10072

MORE THAT JUST QUALITY — **AN EXPERIENCE"**

ASTRON
OXFORD
INTEGRATED PRIVACY SET

Component: 1 Pair Integrated Privacy Set
(with push button on rose) & 1x Integrated Privacy Latch

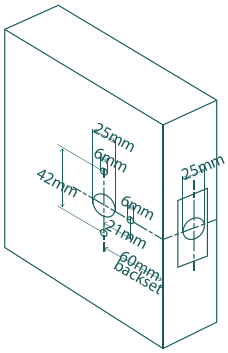

1. Measure the door thickness and mark the centre at the desired height for the latch.

2. Drill a 25mm (1") diameter hole through the door edge to a depth of at least 80mm. Ensure this hole is square to the door.

3. Mark the face of the door each side for drilling a 25mm diameter spindle hole. The centre of the spindle hole will need to be 60mm from the door edge (back-set). For clean cut-outs, drill from both sides, meeting in the middle of the door. Mark and drill two 6mm screw holes at 21mm above and below the centre of the spindle hole. Mark and drill one 6mm privacy pln hole at 21mm from the centre of the spindle hole towards the latch.

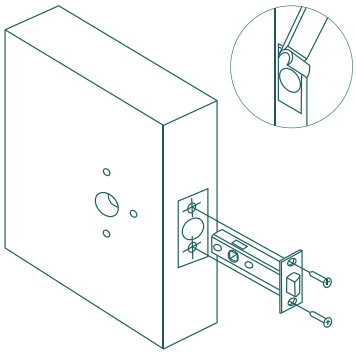

4. To change the handing of the latch, remove the outer faceplate, pull and rotate the latch tongue 180 degrees.

5. Insert the latch. scribe around the faceplate, remove, then chisel out recess to enable the latch faceplate to sit flush with the door edge.

6. Remove any loose saw dust and insert the latch. attach the faceplate and secure with the wood screws provided.

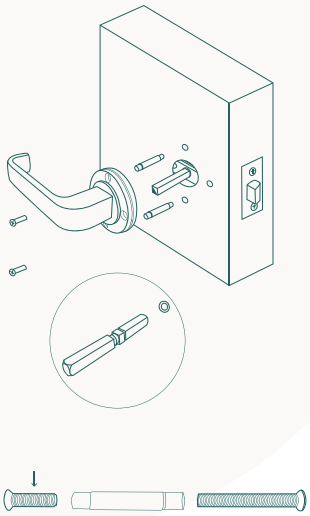

7. Remove the o-ring from the spindle. Insert the spindle into the latch so an even amount protudes on each side of the door and slide the o-ring back onto the spindle.

8. Pull off rose covers from the levers and unscrew the bolts from the threaded sleeves-

9. Insert the threaded sleeves through the oval holes in the back of the rose at two vertical positions. Screw the short bolts from the top of the rose through into the threaded sleeves.

10. Silde the handle over the spindle and press against the door.

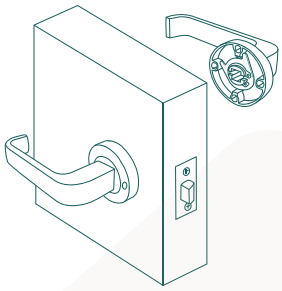

Note: The grubscrews may need a re-tighten after a bedding-in period. We recommend medium strength thread-lock to be used.

11. Slide the handle on the opposite side of the door over the spindle and tighten the long bolts through into the rose.

12. Press the rose covers onto the handles and ensure the integrated privacy pin hole is lined up.Tighten the grubscrews on the side of the levers onto the spindle for each side of the door. For the square rose tighten the grubscrews on the side of the rose.

13. Insert the integrated privacy pin through the rose and into the threaded slot on the latch.

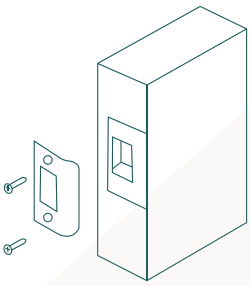

14. Close the door against the frame and mark the latch position for fitting of the striker.
15. Router or chisel so the striker fits flush, allowing for the plastic dustbox behind the striker.
16. Secure the striker with the wood screws provided. Test the door and if necessary, adjust the striker anti-rattle tab to take up any rattle.

Note: Measurements are in mm

1 300 926 321
sales@zanda.com.au
www.zanda.com.au