ZANDA
COMMERCIAL HARDWARE

Data Sheet

Product Code: 9355

"MORE THAN JUST QUALITY — **AN EXPERIENCE**"

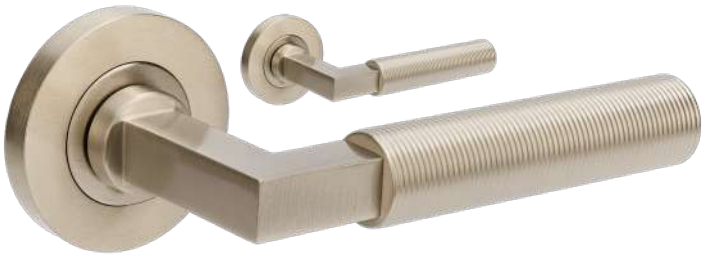

VISCA

ZURICH FLUTED

LEVER SET

Component: 1 Pair Lever





Description:

- Designed by esteemed European creators
- Crafted in Italy with expert precision
- Made from solid brass or stainless steel
- Available in a variety of premium finishes
- Lifetime warranty for long-term assurance
- Corrosion-resistant sacribond & micronized finishes
- Heavy-duty construction for durability
- Engineered for smooth and reliable performance
- Blends craftsmanship with cutting-edge innovation
- Fluted design for refined vertical detailing.

Available Set:

- Lever Set
- Passage Set
- Privacy Set
- Dummy Set
- Entrance Set

Available Finish:

- Brushed Nickel
- Graphite Nickel
- Satin Brass

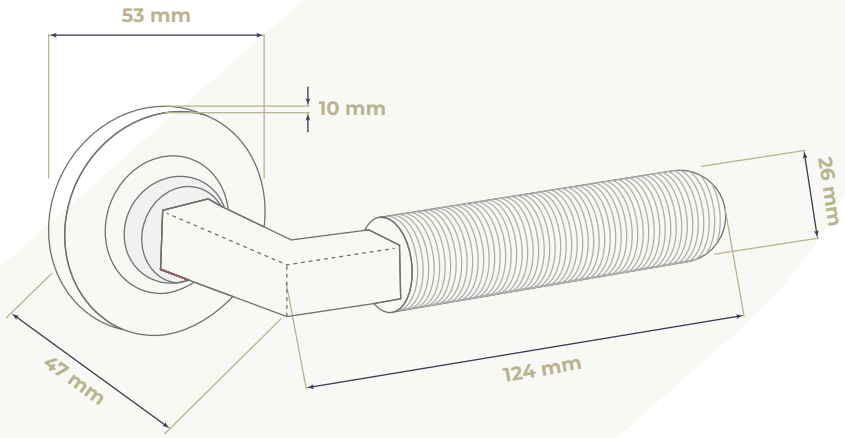

Note: Measurements are in mm

1 300 926 321
sales@zanda.com.au
www.zanda.com.au

ZANDA
COMMERCIAL HARDWARE

Data Sheet

Product Code: 9355

"MORE THAN JUST QUALITY — **AN EXPERIENCE**"

VISCA

ZURICH FLUTED

LEVER SET

Component: 1 Pair Lever

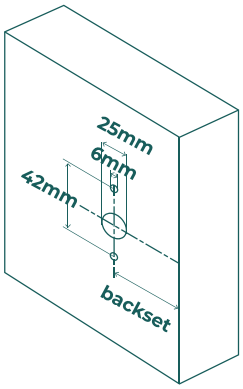

1. Establish the height and position for the handles on the door.

2. Mark the face of the door each side for drilling a 25mm diameter spindle hole. Match the backset measurement of the passage doors throughout your home. Mark and drill two 6mm screw holes at 21mm above and below the centre of the spindle hole. For clean cut-outs, drill from both sides, meeting in the middle of the door.

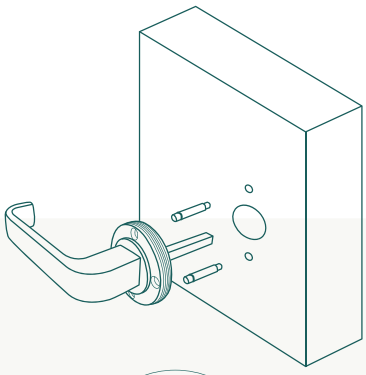

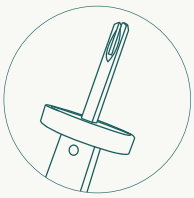

3. Unscrew the rose covers from the levers and unscrew the bolts from the threaded sleeves.

4. Insert the spindle into the the handle. Ensure the grooved side of the spindle will align with the grubscrews on the handles.

5. Insert the threaded sleeves into the oval holes in the back of the rose at two vertical positions. Screw the short bolts from the top of the rose through into the threaded sleeves.

6. Insert the handle into the hole and press against the door.

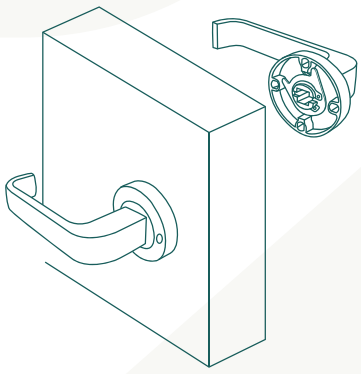

7. Slide the handle on the opposite side of the door over the spindle and tighten the long bolts through the rose into the threaded sleeves.

8. Screw the rose covers onto the handles and tighten the grubscrews on the side of the levers onto the spindle for each side of the door. For the square rose press on the rose covers and tighten the grubscrews on the side of the rose.

Note: The grubscrews may need a re-tighten after a bedding-in period. We recommend medium strength thread-lock to be used.

Note: Measurements are in mm

1 300 926 321
sales@zanda.com.au
www.zanda.com.au