ALLEGRI.

BY KALCO LIGHTING™

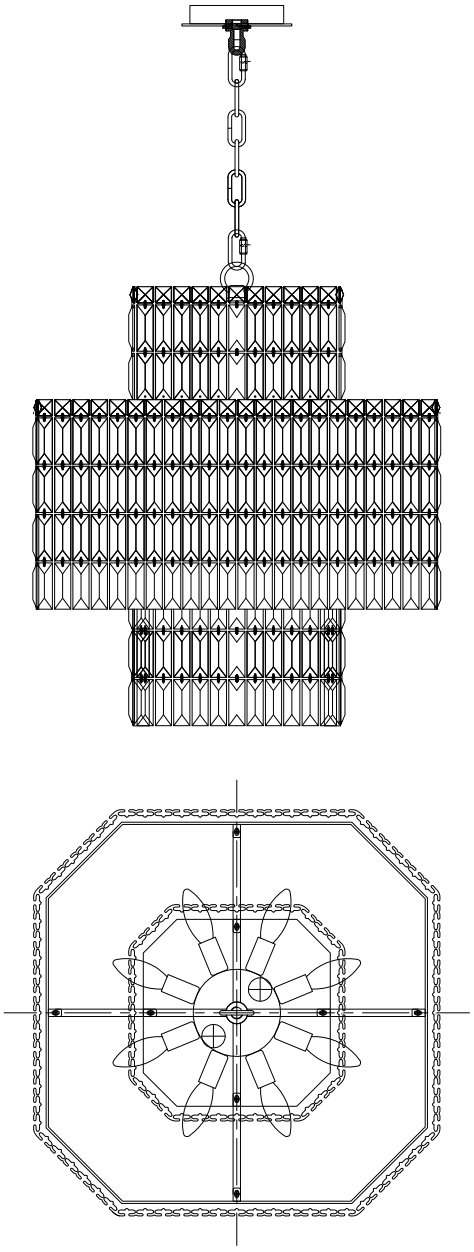

MODEL 036555

ASSEMBLY AND DRESSING INSTRUCTIONS

Blending innovative design, cutting-edge technology and the grace and elegance of traditional crystal, ALLEGRI® proudly brings you a new approach to lighting. ALLEGRI® fixtures are made from the finest raw materials and are brought to life through a combination of traditional manufacturing, such as sand casting, hand-forging and technology driven techniques including laser cutting.

Enclosed are detailed instructions on how to properly install your fixture. Please read all instructions carefully. If you need further assistance, please contact the dealer from which you purchased this product or call 800-525-2655 to speak with an ALLEGRI® customer service representative. We hope you enjoy your fixture!

ALLEGRI.

BY KALCO LIGHTING™

ASSEMBLY AND DRESSING INSTRUCTIONS

WARNING!

CONTENTS ARE FRAGILE

HANDLE WITH CARE

THE METAL FRAME, FINISH AND CRYSTAL COMPONENTS OF THIS CHANDELIER ARE VERY DELICATE. PLEASE EXERCISE EXTREME CAUTION DURING UNPACKING AND INSTALLATION.

PLACE ALL PIECES TOGETHER IN A NUMERICAL ORDER AND IN THE ORIENTATION DEPICTED. REFER TO THE PARTS LIST TO AVOID ANY CONFUSION BETWEEN PARTS THE PARTS NUMBER MUST COINCIDE.

CAUTION: FAILURE TO INSTALL THIS FIXTURE PROPERLY MAY RESULT IN SERIOUS PERSONAL INJURY AND PROPERTY DAMAGE. All electrical components must be installed only by a Licensed Electrician.
This product must be installed in accordance with the National Electric Code (NEC), and appropriate local electrical code(s), by a person familiar with the construction and operation of the product and the hazard involved.*

CAUTION: Do not exceed maximum wattage note on fixture. Uses only recommended bulbs with fixture.

GENERAL NOTES

- For your safety and proper operation of fixture, read and understand all instructions completely before commencing installation.
- This fixture is suited for dry locations. Never install fixture on damp ceiling; room should be dry and well ventilated.
- Extreme care should be taken to avoid damage to the surface of lighting fixture and wires. Wearing gloves is recommended for installation.
- Connect ribbed wire of lighting fixture to live wire, while smooth wire of lighting to neutral. Connect bare copper or silver color ground wire of fixture to the double colored or green wire of outlet box.
- Use UL LISTED wire nuts for the wiring connections in this fixture. Wrap wire nut connections with UL LISTED electrical tape.
- Keep lighting away from acid, alkali and other corrosive chemical or gas; clean the fixture with a clean cloth only.
- Fixture must be firmly secured when installing ceiling tube, chain pipe and other connecting parts.
- Never cover the lighting fixture when power is connected.
- Disconnect the power before installing, cleaning and/or replacing light bulb.
- Extreme care should be taken when installing and cleaning of Glass and/or Crystal Components.
- This product is rated 110-130V/60HZ bulbs 40W Maximum.
- Save these instructions for future reference.

WARNING

The electricity must be turned off at the main fuse box or circuit breaker before installing this fixture. Turning the power off using the light switch may not be sufficient to prevent electrical shock.

*ALLEGRI will not be liable for injury or damage caused by improper installation, lamping or use of this fixture.

ALLEGRI.

BY KALCO LIGHTING™

CANOPY MOUNTING INSTRUCTIONS

WARNING

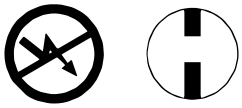

Electrical Danger Turn Power Off

All electrical components must be installed by a licensed electrician in accordance with the National Electric code and the appropriate local electrical codes.

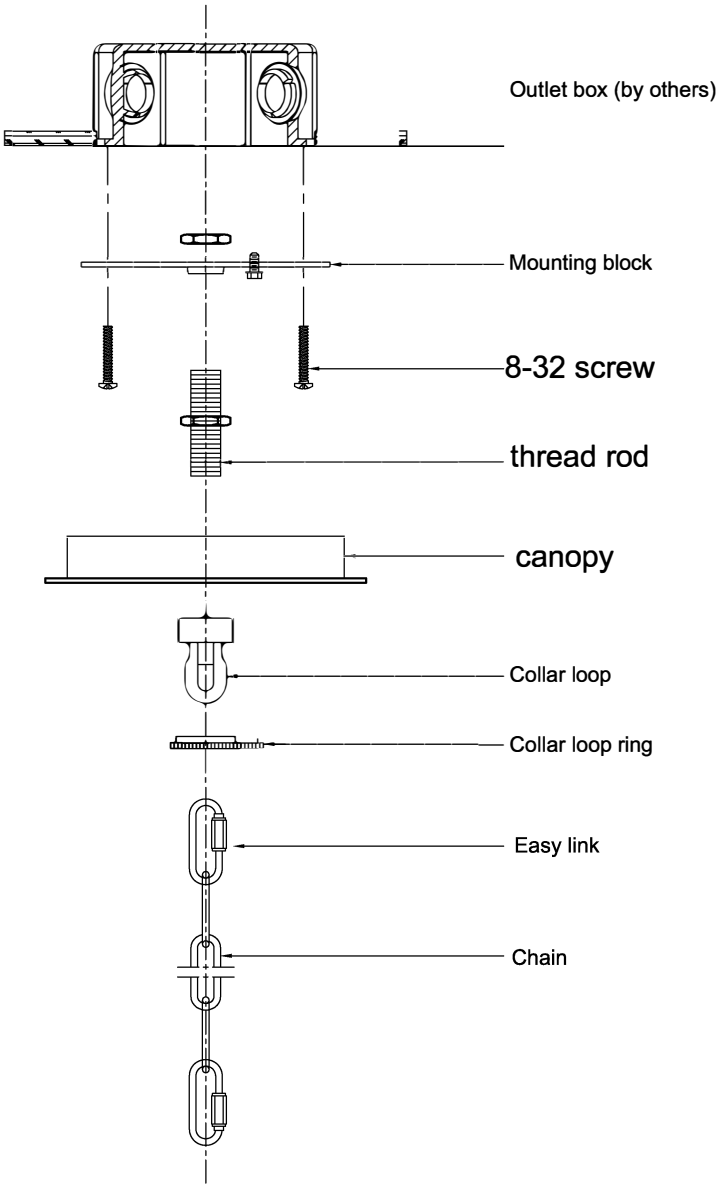

INSTALL CANOPY AS FOLLOWS

CAUTION: Be sure power is off at the main breaker box prior to installation.

1. Drill a hole on main ceiling beam and pass Solid Nipple through.
2. Place Washer and Hex Nut on top of Solid Nipple to hold.
3. Take Outlet Box through Solid Nipple and screw Plate Hickey, then screw Plate Hickey to main ceiling beam with 4 screws.
4. Secure the Washer and Hex Nut to Solid Nipple from top side of main ceiling beam.
5. Screw Collar Loop to Nipple as shown, raise Canopy flat to ceiling and secure it with Collar Loop Ring.
6. Hang Chain to Collar Loop with the Easy Link, Proceed to fixture frame assembly Step 1.

ALLEGRI.

BY KALCO LIGHTING™

FRAME ASSEMBLY INSTRUCTIONS

MODEL 036555

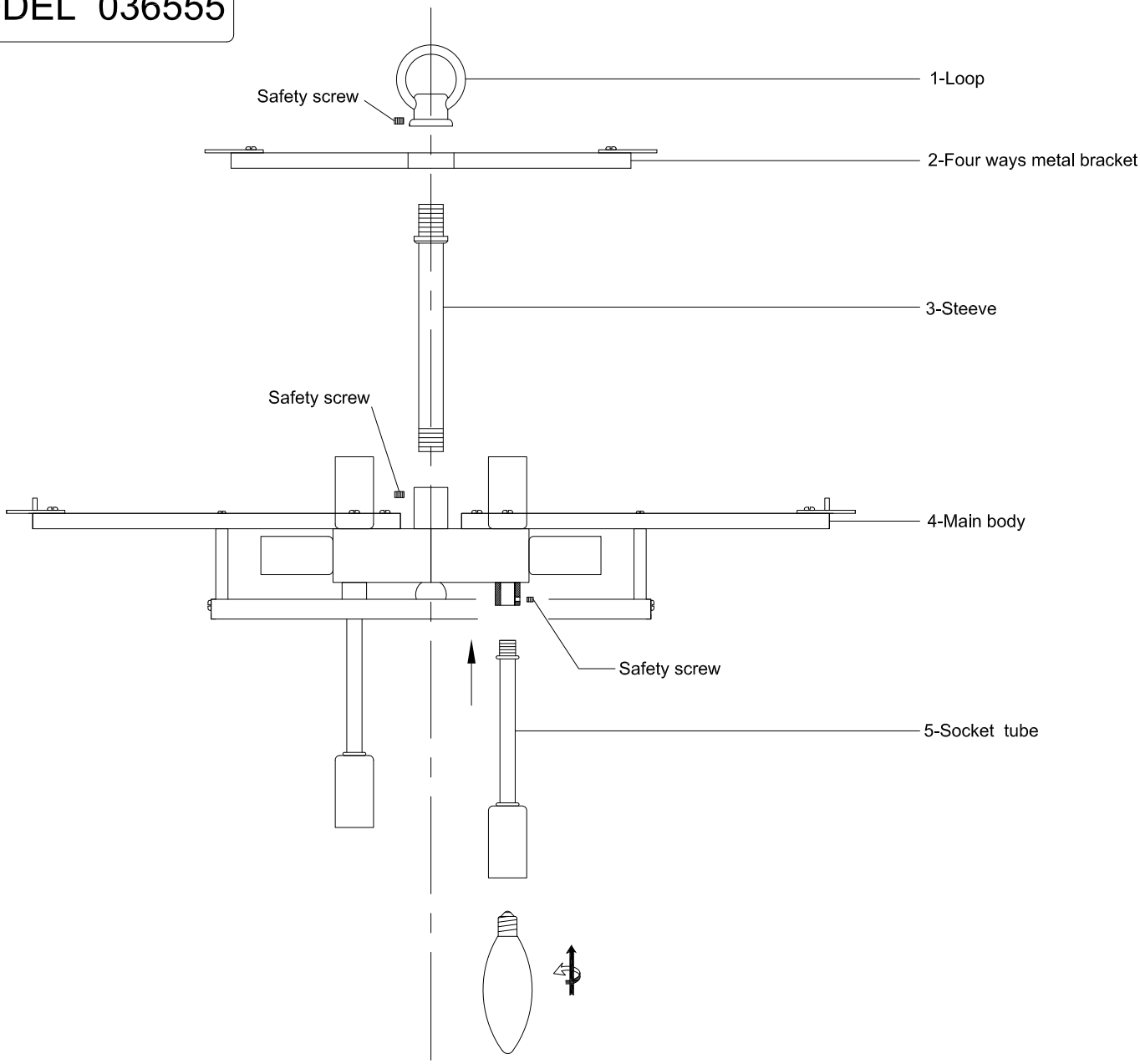

INSTALLATION

a. Turn off electricity, take all parts from part box.
b. Connect the main wire with the power supply circuit.
   See wire connection diagram.
c. Fix part #5 to part #4 by using safety screw.
d. Screw part #3 to part #4.
e. Fix part #2 to part #3 by using part #1.
f. Check the installation and attach bulb into lamp holder.

ALLEGRI®

BY KALCO LIGHTING™

CRYSTAL DRESSING INSTRUCTIONS

MODEL 036555

ATTENTION

1. Take all crystal or glass parts carefully from carton, then put them on a clean cloth.
2. Start hanging crystals from bottom center to top of fixture in an alphabetical order as shown in diagram

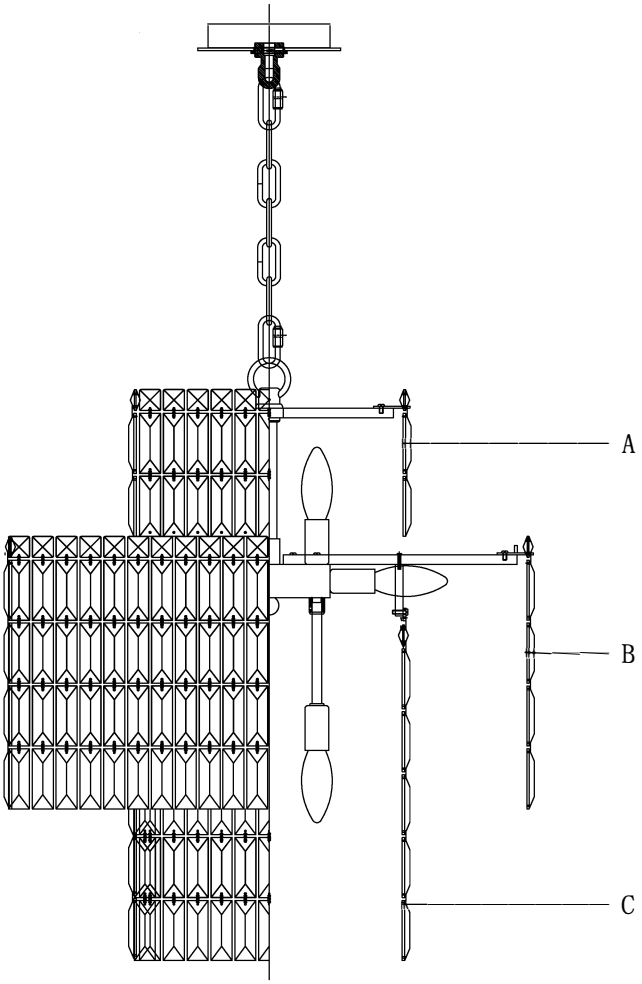

WARNING

Electrical Danger Turn Power Off

All electrical components must be installed by a licensed electrician in accordance with the National Electric code and the appropriate local electrical codes.

You will need 12 - Cand.Buld
40 Watts Recommended
40 Watts Max
Bulb not included

Code	Qty
A	40
B	76
C	40

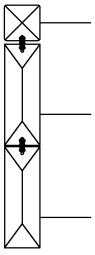

A

B

C

ALLEGRI.

BY KALCO LIGHTING™

LIGHTING CARE INFORMATION

Every ALLEGRI® fixture is of heirloom quality and will last for generations. To ensure it retains its brilliance and splendor for years to come, proper care and regular cleaning are necessary.

It is recommended that ALLEGRI® fixture, and particularly their crystal trim, be lightly dusted with a feather or lambs wool duster, or soft brush every two months, or whenever it appears dull or dusty. A thorough cleaning should be completed every six months.

Before cleaning an ALLEGRI® fixture, first locate the fixture's trim diagram. This will assist in replacing the crystal trim in its proper location after cleaning. Should a replacement trim diagram be required, please call 800-525-2655 to speak with an ALLEGRI® customer service representative, who can provide a new diagram.

ALLEGRI® recommends several different cleaning methods, depending on the type of fixture. Some fixtures can be cleaned with limited removal of crystal, while others must be completely untrimmed.

Place a soft towel or blanket directly beneath the fixture to limit the damage to both the crystal and the surface below the fixture, should a piece of crystal be dislodged during the cleaning process. Extreme care must be taken around any electrical fixture. For personal safety and the safety of the fixture, be sure that the fixture has been turned off. Never rotate or spin the fixture as this can cause the fixture to lose support and fall. Instead, move around the fixture while cleaning.

White Glove Method

Prepare a cleaning solution of one part isopropyl alcohol to three parts distilled water and place in a clean spray bottle. Do not use packaged cleaning fluids, as many of these contain ammonia, which may degrade the finish of the fixture and the quality of the crystal.

Wearing white cotton gloves, spray one glove with the solution and keep one dry. Gently polish each crystal with the damp glove and immediately wipe it with the dry glove. Do not tug or pull on the crystal, as this may cause the connectors to chip or crack the crystal, or dislodge it from the fixture.

Warning: To reduce the risk of personal injury due to fire and/or electric shock, never spray solution at or near the fixture.

Crystal Removal Method

Gently remove trim and hand-wash the crystal in lukewarm water using a mild detergent. Rinse in clean water and dry with a soft clean cloth. Do not soak finished crystal such as SWAROVSKI ELEMENTS Colors: Teak, Golden Shadow or Silver Shade, for extended periods, as this may degrade the crystal's finish.

With the fixture untrimmed and turned off, wipe the frame, including the light bulbs once they are completely cool, with a soft cloth.

Wearing white gloves, finger-cots or using a soft clean cloth, gently replace the trim as directed in the trim diagram.