ALLEGRI.

BY KALCO LIGHTING™

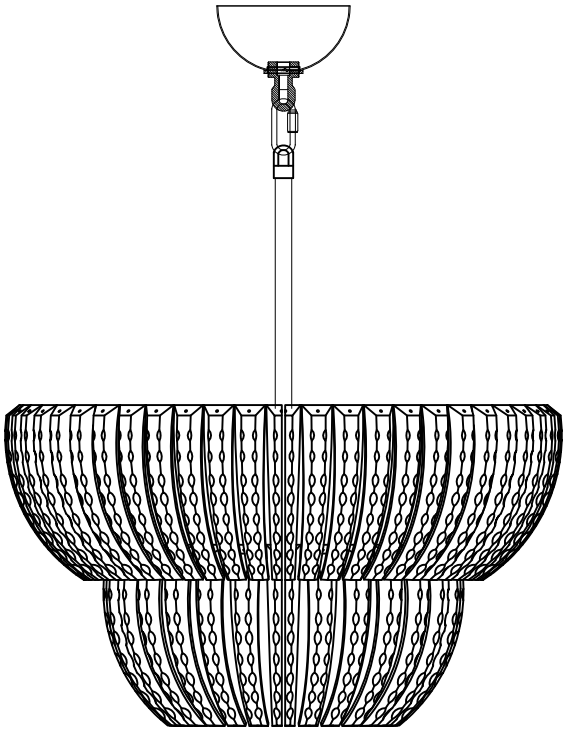

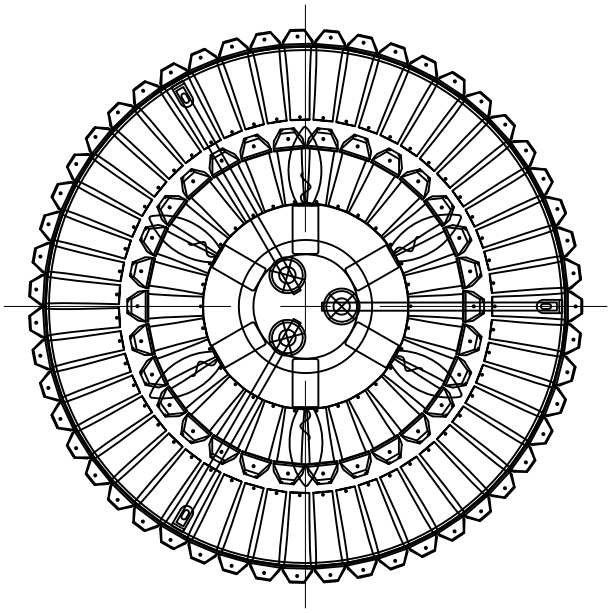

MODEL 040851

Please read all instructions carefully. If you need further assistance, please contact the dealer from which you purchased this product or call 800-525-2655 to speak with an ALLEGRI customer seriver representative. We hope you enjoy your fixture!

ALLEGRI.

BY KALCO LIGHTING™

WARNING

CONTENTS ARE FRAGILE HANDLE WITH CARE

THE METAL FRAME, FINISH AND CRYSTAL COMPONENTS OF THIS CHANDELIER ARE VERY DELICATE.
PLEASE EXERCISE EXTREME CAUTION DURING UNPACKING AND INSTALLATION.

PLACE ALL PIECES TOGETHER IN A NUMERICAL ORDER AND IN THE ORIENTATION DEPICTED.
REFER TO THE PARTS LIST TO AVOID ANY CONFUSION BETWEEN PARTS THE PARTS NUMBER MUST COINCIDE.

CAUTION: FAILURE TO INSTALL THIS FIXTURE PROPERLY MAY RESULT IN SERIOUS PERSONAL INJURY AND PROPERTY DAMAGE. All electrical components must be installed only by a Licensed Electrician.
This product must be installed in accordance with the National Electric Code (NEC), and appropriate local electrical code(s), by a person familiar with the construction and operation of the product and the hazard involved.

Do not exceed maximum wattage on fixture. Uses only recommended bulbs with fixture.

GENERAL NOTES

- For your safety and proper operation of fixture, read and understand all instructions completely before commencing installation.
- This fixture is suited for dry locations. Never install fixture on damp ceiling; room should be dry and well ventilated.
- Extreme care should be taken to avoid damage to the surface of lighting fixture and wires. Wearing gloves is recommended for installation.
- Connect ribbed wire of lighting fixture to live wire, while smooth wire of lighting to neutral. Connect bare copper or silver color ground wire of fixture to the double colored or green wire of outlet box.
- Use UL LISTED wire nuts for the wiring connections in this fixture. Wrap wire nut connections with UL LISTED electrical tape.
- Keep lighting away from acid, alkali and other corrosive chemical or gas; clean the fixture with a clean cloth only.
- Fixture must be firmly secured when installing stems, crossbar, chain and other connecting parts.
- Never cover the lighting fixture when power is connected.
- Disconnect the power before installing, cleaning and/or replacing light bulb.
- Extreme care should be taken when installing and cleaning of Glass and/or Crystal Components.
- Save these instructions for future reference.

WARNING

The electricity must be turned off at the main fuse box or circuit breaker before installing this fixture. Turning the power off using the light switch may not be sufficient to prevent electrical shock.

*ALLEGRI will not be liable for injury or damage caused by improper installation, lamping or use of this fixture.

ALLEGRI®
BY KALCO LIGHTING™

CANOPY MOUNTING INSTRUCTIONS

INSTALL CANOPY AS FOLLOWS (FIG. 1):

CAUTION: Be sure power is off at the main breaker box prior to installation.
1. Use 2 8-32 screws to fix crossbar on j-box.
2. Screw part Collar loop to part Nipple, and lock tightly by safety screw.
3. Connect the main wire with the power supply circuit see wire connection diagram.
4. Connect Easy link with Collar loop.
5. Move the part Canopy to the ceiling then use Collar loop ring to fix it.
6. Hang Steeve to Collar Loop with the Easy Link, proceed to fixture frame assembly step 1.

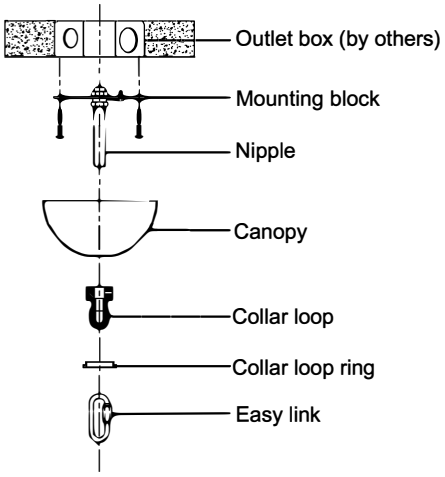

(FIG. 1)

Wiring Diagram

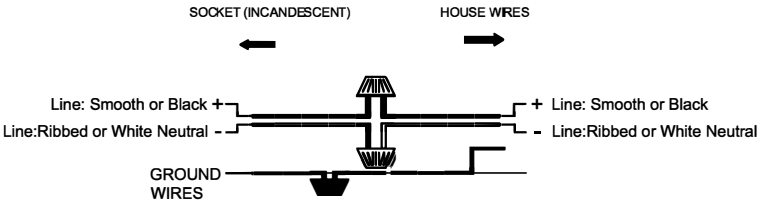

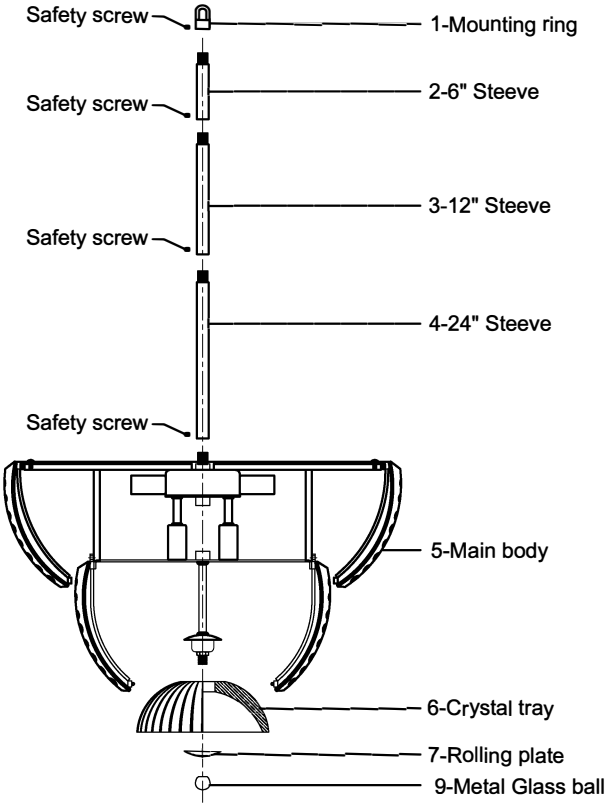

(FIG. 2)

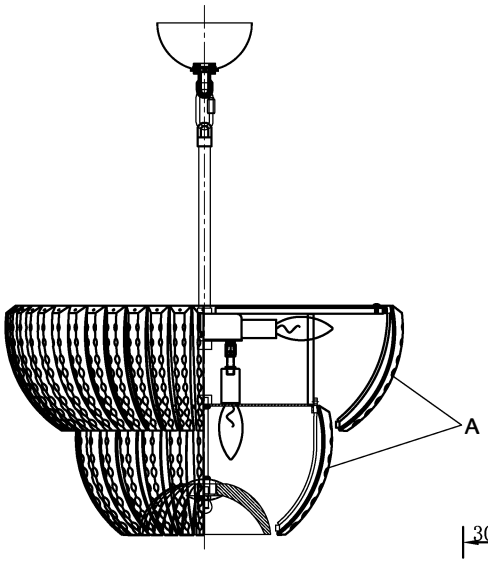

WARNING

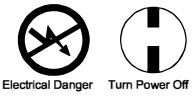

All electrical components must be installed by a licensed electrician in accordance with the National Electric code and the appropriate local electrical codes.

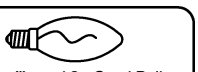

You will need 9 - Cand.Bulbs
40 Watts Recommended
40 Watts Max
Bulb not included

Code	Qty
A	84

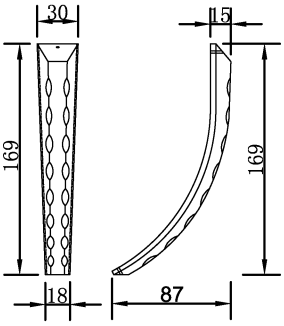

Clear K9 crystal/R20014-169-00-00
W30*L87*H169mm
A

INSTALLATION(FIG. 2):

a. Turn off electricity, take all parts from part box.
b. Connect the main wire with the power supply circuit.
   See wire connection diagram.
c. Screw part #4 to part #5, and lock tightly by safety screw.
d. Screw part #3 to part #4, and lock tightly by safety screw.
e. Screw part #2 to part #3, and lock tightly by safety screw.
f. Screw part #1 to part #1, and lock tightly by safety screw.
g. Fix part #6, #7 to part #5 by using part #9.
h. Check the installation and attach bulb into lamp holder.

Every ALLEGRI® fixture is of heirloom quality and will last for generations. To ensure it retains its brilliance and splendor for years to come, proper care and regular cleaning are necessary. It is recommended that ALLEGRI® fixture, and particularly their crystal trim, be lightly dusted with a feather or lambs wool duster, or soft brush every two months, or whenever it appears dull or dusty. A thorough cleaning should be completed every six months.

Before cleaning an ALLEGRI® fixture, first locate the fixture's trim diagram. This will assist in replacing the crystal trim in its proper location after cleaning. Should a replacement trim diagram be required, please call 800-525-2655 to speak with an ALLEGRI® customer service representative, who can provide a new diagram.

ALLEGRI® recommends several different cleaning methods, depending on the type of fixture. Some fixtures can be cleaned with limited removal of crystal, while others must be completely untrimmed.

Place a soft towel or blanket directly beneath the fixture to limit the damage to both the crystal and the surface below the fixture, should a piece of crystal be dislodged during the cleaning process. Extreme care must be taken around any electrical fixture. For personal safety and the safety of the fixture, be sure that the fixture has been turned off. Never rotate or spin the fixture as this can cause the fixture to lose support and fall. Instead, move around the fixture while cleaning.

White Glove Method

Prepare a cleaning solution of one part isopropyl alcohol to three parts distilled water and place in a clean spray bottle. Do not use packaged cleaning fluids, as many of these contain ammonia, which may degrade the finish of the fixture and the quality of the crystal.

Wearing white cotton gloves, spray one glove with the solution and keep one dry. Gently polish each crystal with the damp glove and immediately wipe it with the dry glove. Do not tug or pull on the crystal, as this may cause the connectors to chip or crack the crystal, or dislodge it from the fixture.

Warning:
To reduce the risk of personal injury due to fire and/or electric shock, never spray solution at or near the fixture.

Crystal Removal Method

Gently remove crystal and hand-wash the crystal in lukewarm water using a mild detergent. Rinse in clean water and dry with a soft clean cloth. With the fixture untrimmed and turned off, wipe the frame, including the light bulbs once they are completely cool, with a soft cloth. Wearing white gloves, finger-cots or using a soft clean cloth, gently replace the crystal.