ASSEMBLY INSTRUCTIONS

519221WB

LED Convertible Wall Sconce

If you have any questions or problems assembling your fixture please call us for assistance. Customer Service:(702)361-4345 or (800)525-2655, customer.services@kalco.com

WARNING:

1. This fixture must be installed by qualified electrician and contractors understanding ceiling hanging points, structure and strength to meet building code.
2. Turn off the power to the fixture's circuit at the service panel. Use a voltage detector to verify that the power is off.
3. Have electrician install fixture to properly anchor canopies that support the alabaster.

FIXTURE ASSEMBLY (FIG.2):

1. Fasten 2 (state specification of screw)into mounting plate so that they extend away from wall when mounting plate is installed
2. Attach the mounting plate to outlet box with screws
3. Refer to wiring diagram.Splice the ribbed side of fixture cord to the white supply wire from outlet box with wire connector. Splice the smooth side of the fixture cord to black supply wire from outlet box with wire connector
4. Carefully tuck in all wires Attach the backplate with the mounting screw on the crossbar.Secure fixture with shell knobs.
5. Use part#3 Iron lathe part to fix part#2 Round iron sheet onto 1/4-20 thread rod; Use part #5 Iron welded loop to fix part#4 Clear plastic washer onto part#3 Iron lathe part;
6. Hang part#6 Combination frame onto part#5 Iron welded loop; Use part #7 Grub screw to fix part#8 White alabaster onto part#6 Combination frame.

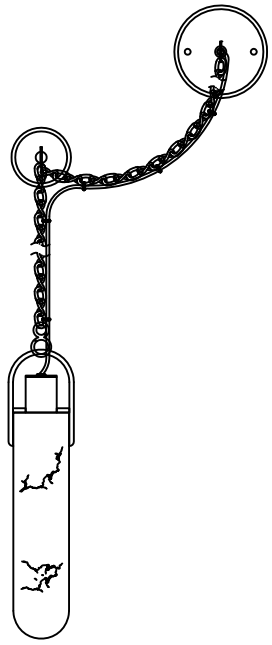

(FRONT VIEW)

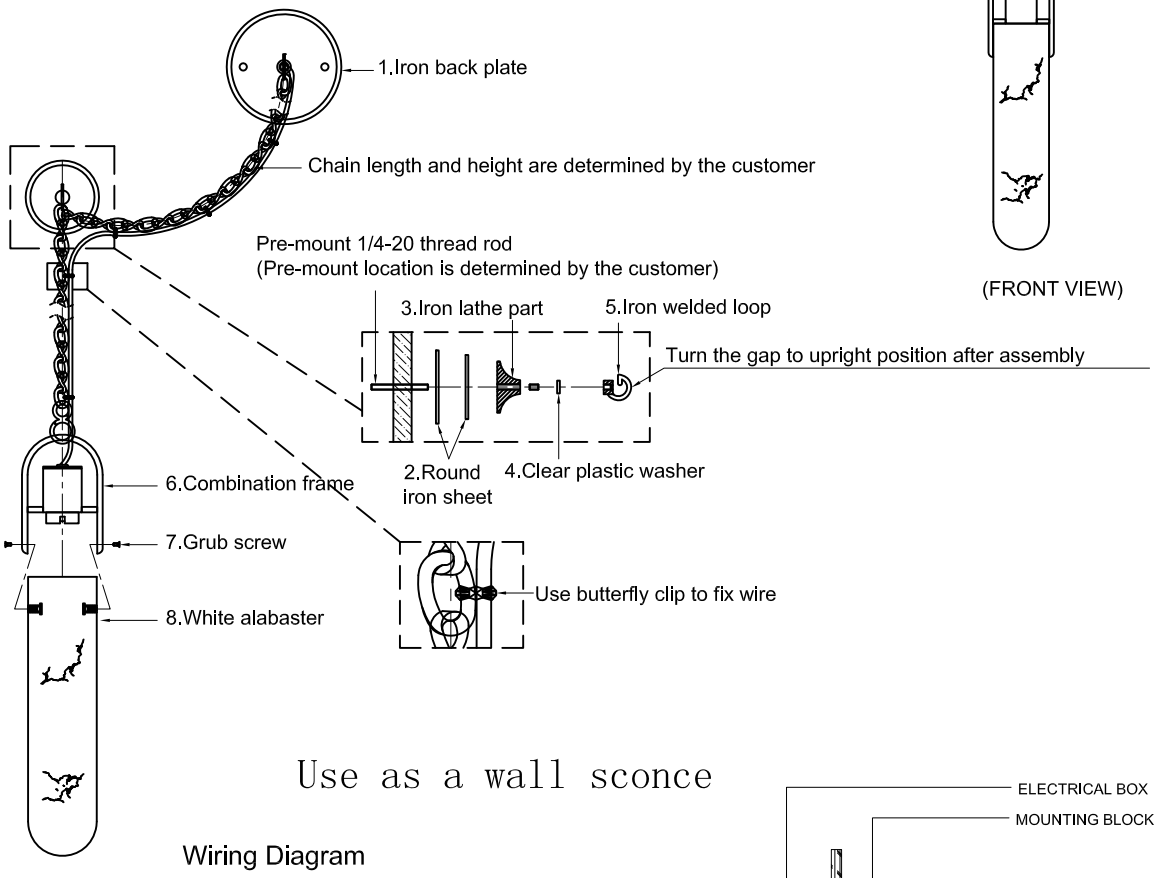

Use as a wall sconce

Wiring Diagram

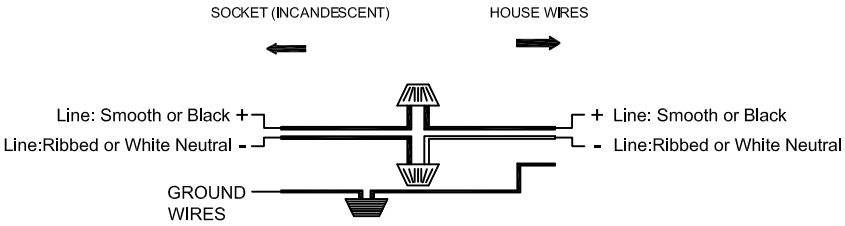

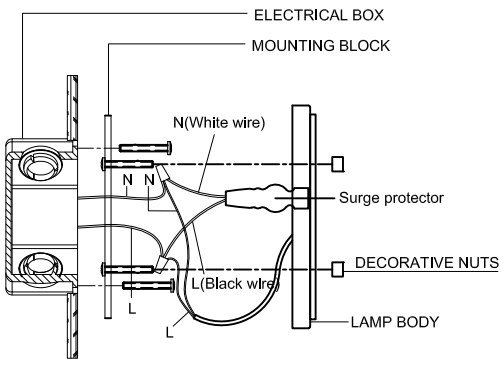

ASSEMBLY INSTRUCTIONS

519221WB

LED Convertible Pendant

If you have any questions or problems assembling your fixture please call us for assistance. Customer Service:(702)361-4345 or (800)525-2655, customer.services@kalco.com

WARNING:

1. This fixture must be installed by qualified electrician and contractors understanding ceiling hanging points, structure and strength to meet building code.
2. Turn off the power to the fixture's circuit at the service panel. Use a voltage detector to verify that the power is off.
3. Have electrician install fixture to properly anchor canopies that support the alabaster.

FIXTURE ASSEMBLY (FIG.2):

1. Fasten 2 (state specification of screw)into mounting plate so that they extend away from wall when mounting plate is installed
2. Attach the mounting plate to outlet box with screws
3. Refer to wiring diagram.Splice the ribbed side of fixture cord to the white supply wire from outlet box with wire connector. Splice the smooth side of the fixture cord to black supply wire from outlet box with wire connector
4. Carefully tuck in all wires Attach the backplate with the mounting screw on the crossbar.Secure fixture with shell knobs.
5. Use part#3 Iron lathe part to fix part#2 Round iron sheet onto 1/4-20 thread rod;
6. Hang part#4 Combination frame onto part#3 Iron lathe part; Use part #5 Grub screw to fix part#6 White alabaster onto part#4 Combination frame.

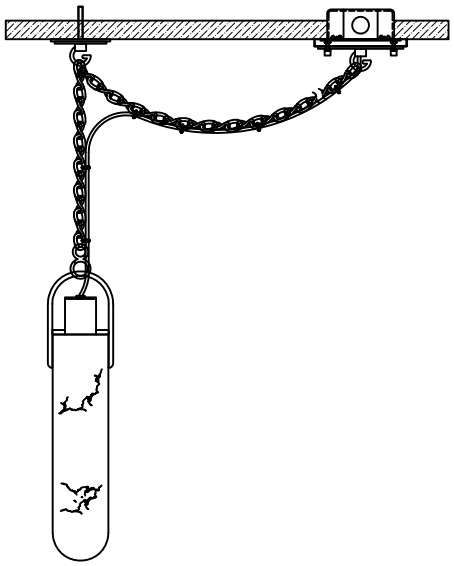

(FRONT VIEW)

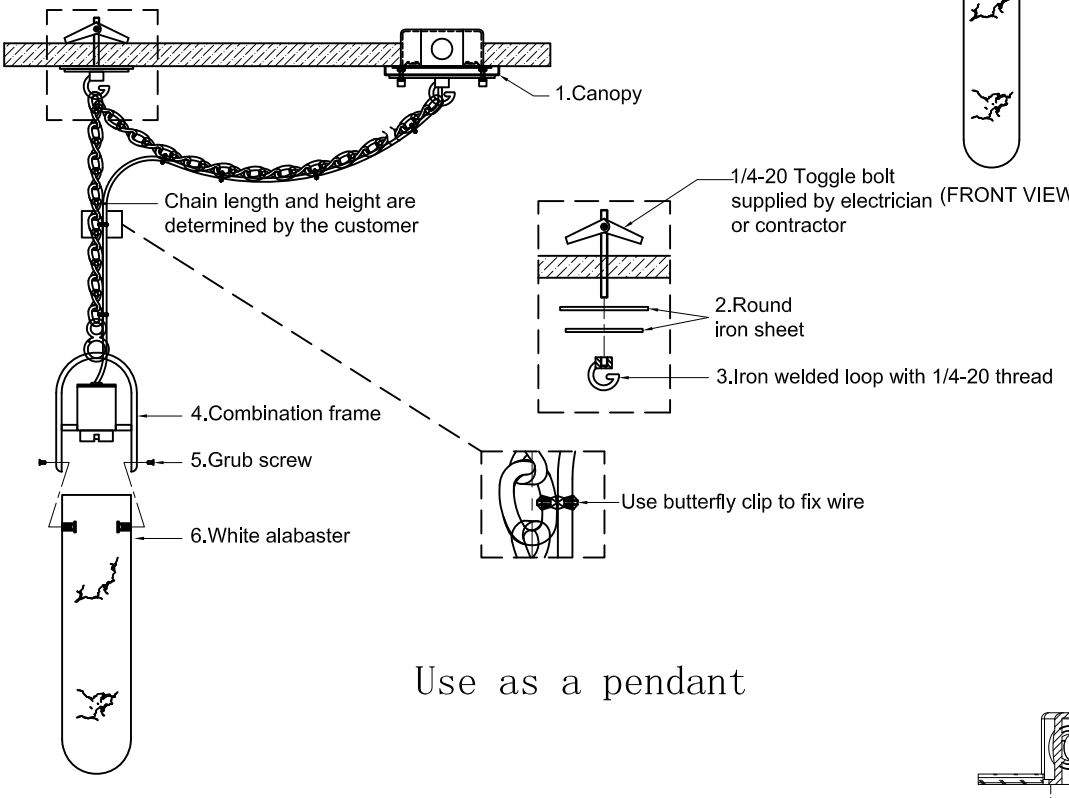

Use as a pendant

Wiring Diagram

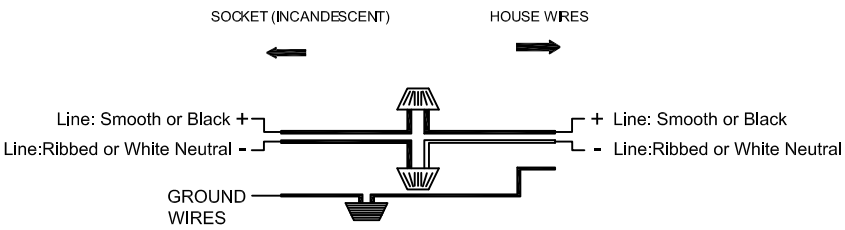

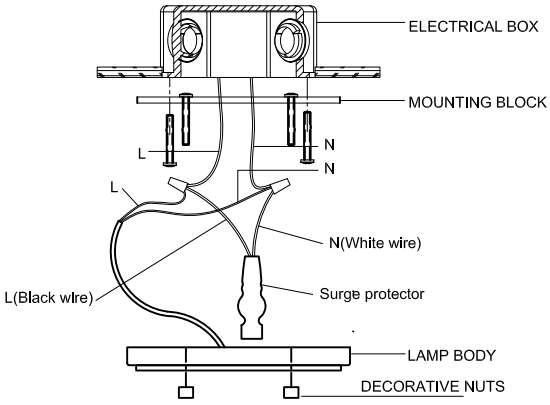

Note:It is recommended that each surge protector be connected to a maximum of 6 LED boards!
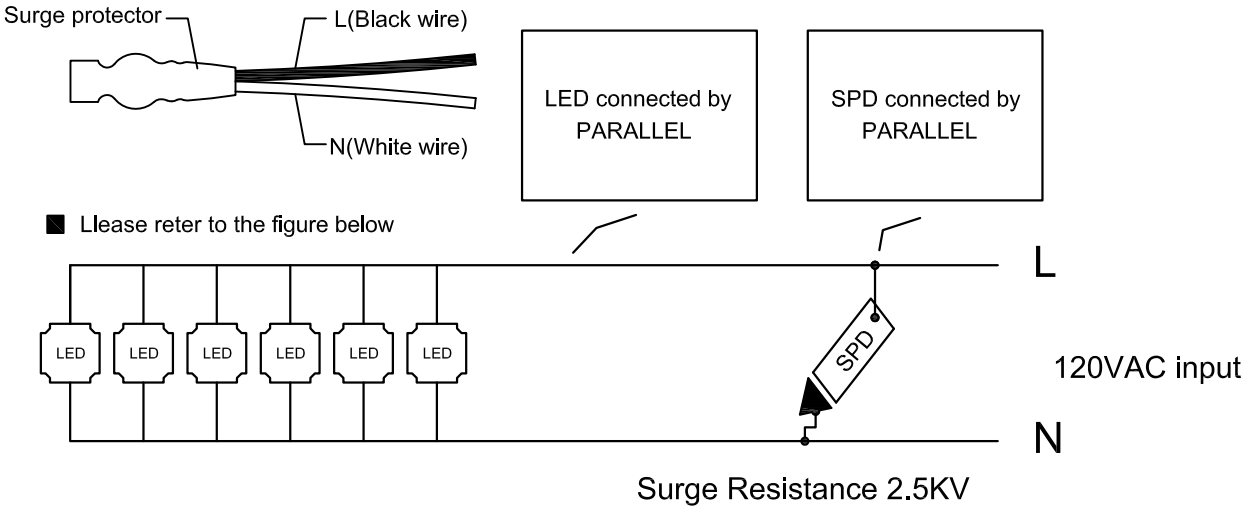
SPD Installation