NOTES:

1. MATERIALS AND FINISHES:
   MAIN BODY:
   BODY - ZINC ALLOY, (ZAMAK #3 PER ASTM B86) NICKEL PL. 100 MIN. THICK OVER COPPER
   HOUSING - PPA, 33% GLASS FILLED, PER MODEL HFFR-4133, COLOR PER TABLE

   CONTACT - BRASS (PER ASTM B16, C36000) & BERYLLIUM COPPER (PER ASTM B196, C17300, TD04),
   GOLD PL. 5 MIN. THICK OVER PHOSPHORUS CONTENT
   9%~13% ELECTROLESS NICKEL PL. 100 MIN. THICK
   INSULATOR - PTFE, PER ASTM D1710, COLOR: NATURAL.
   INSULATOR DISC - PTFE, NATURAL
   LOCK WASHER - PHOSPHOR BRONZE, NICKEL PL. 100 MIN. THICK OVER COPPER STRIKE
   FERRULE & HEX NUT - BRASS, NICKEL PL. 100 MIN. THICK OVER COPPER STRIKE

2. ELECTRICAL:
   A. IMPEDANCE : 50 OHM, NOMINAL
   B. FREQUENCY RANGE: DC- 6 GHz
   C. VSWR: 1.42 MAX.
   D. DIELECTRIC WITHSTANDING VOLTAGE: 800 VRMS, MIN.

3. MECHANICAL:
   A. DURABILITY: 100 CYCLES MIN.
   B. TEMPERATURE RANGE: -40°C TO 85°C
   C. MEETS IP67 SEALING REQUIREMENTS
   D. INTERFACE PER DIN 72594-1
   E. IP-67 ON INTERFACE END ONLY

4. PACKAGING:
   A. QUANTITY: TRAY PACK
   B. MARKING: PACKAGING TO BE MARKED
   "AMPHENOL RF, 2FA1-NXSP-C04E2, AND DATE CODE"
   SEE TABLE

5. ASSEMBLY
   A. STRIP CABLE PER RECOMMENDED DIMENSIONS
   B. SLIDE HEAT SHRINK TUBING, FERRULE AND INSULATOR DISC ONTO CABLE.
   C. SOLDER CABLE CENTER CONDUCTOR TO BULLET CONTACT,
   BOTTOMING ON INSULATOR DISC
   D. INSERT CABLE WITH BRAID OVER KNURL.
   E. CRIMP FERRULE OVER BRAID WITH .213" HEX DIE. REFER TO
   DIMENSION FROM FERRULE TO BODY 1.6 MM. TAKE CARE NOT TO CRIMP OVER BODY.
   F. APPLY HEAT SHRINK TUBE OVER FERRULE

6. SHOWS CABLE ENTRY DIMENSIONS

REVISIONS				
REV	DESCRIPTION	DATE	ECN	BY
A	RELEASE TO MFG.	18-Aug-25	17555	SH

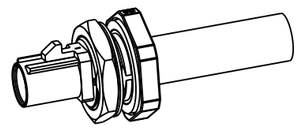

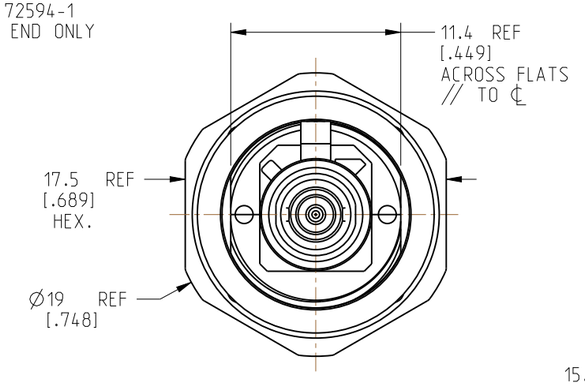

LOCK WASHER & HEX NUT
ARE NOT SHOWN IN THIS VIEW

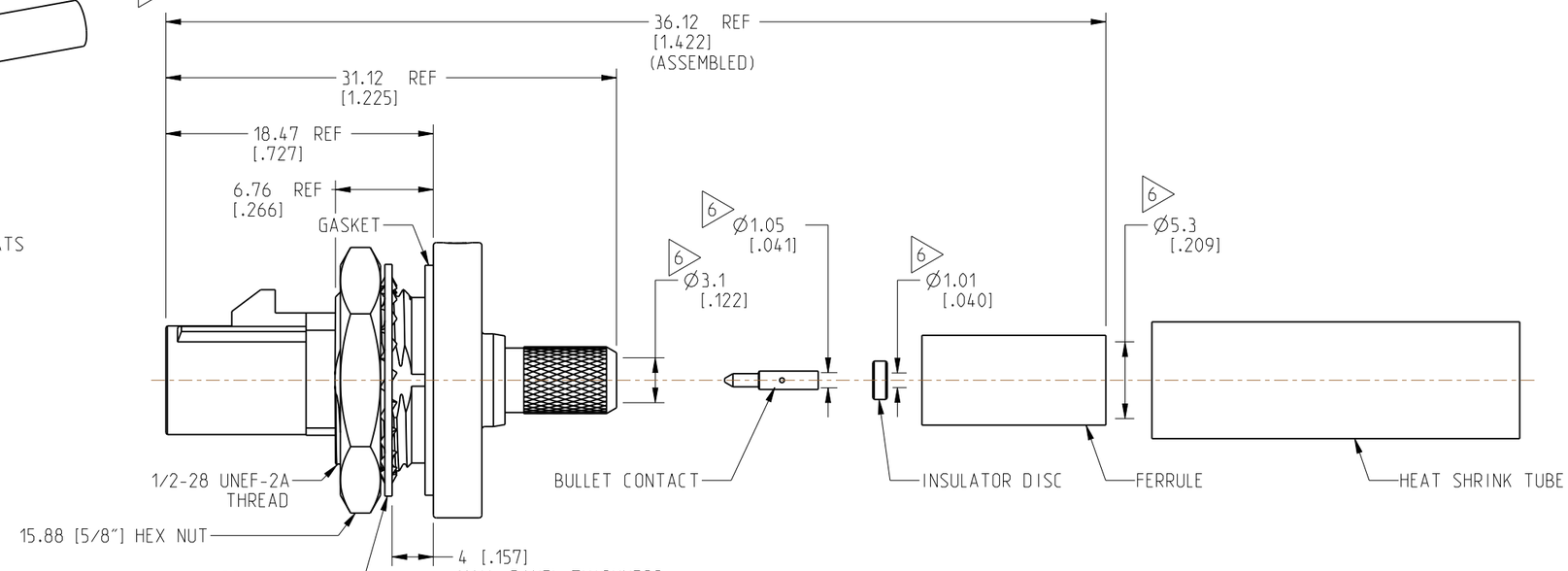

CODING	DRAWING NO.	COLOR	RAL NO.
A	2FA1-NASP-C04E2	JET BLACK	9005
B	2FA1-NBSP-C04E2	CREAM	9001
C	2FA1-NCSP-C04E2	SIGNAL BLUE	5005
D	2FA1-NDSP-C04E2	CLARET VIOLET	4004
E	2FA1-NESP-C04E2	LEAF GREEN	6002
F	2FA1-NFSP-C04E2	NUT BROWN	8011
G	2FA1-NGSP-C04E2	BLUE GREY	7031
H	2FA1-NHSP-C04E2	HEATHER VIOLET	4003
I	2FA1-NISP-C04E2	BEIGE	1001
K	2FA1-NKSP-C04E2	CURRY	1027
L	2FA1-NLSP-C04E2	CARMINE RED	3002
M	2FA1-NMSP-C04E2	PASTEL ORANGE	2003
N	2FA1-NNSP-C04E2	PASTEL GREEN	6019
Z	2FA1-NZSP-C04E2	WATER BLUE	5021

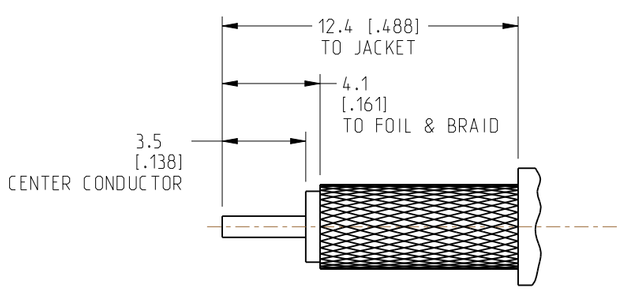

RECOMMEND CABLE STRIPPING DIMENSIONS

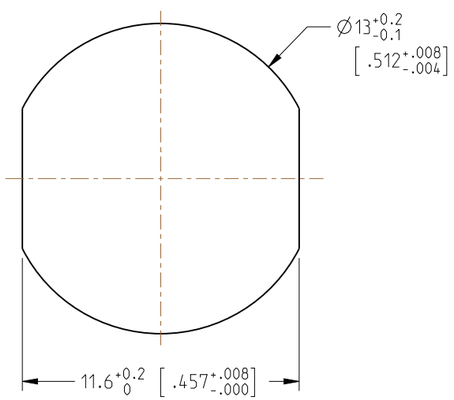

RECOMMEND MOUNTING HOLE DIMENSIONS

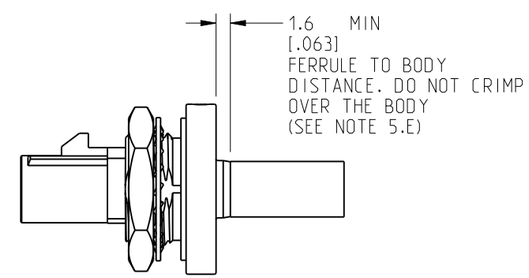

HEAT SHRINK TUBE
IS NOT SHOWN IN THIS VIEW

CUSTOMER OUTLINE DRAWING

ALL OTHER SHEETS ARE FOR INTERNAL USE ONLY

NOTICE: These drawings, specifications, or other data (1) are, and remain the property of Amphenol corp. (2) must be returned upon request; and (3) are confidential and not to be disclosed to any person other than those to whom they are given by Amphenol Corp. The furnishing of these drawings, specifications, or other data by Amphenol Corp., or to any other person to anyone for any purpose is not to be regarded by implication or otherwise in any manner licensing, granting rights to permitting such holder or any other person to manufacture, use or sell any product, process or design, patented or otherwise, that may in any way be related to or disclosed by said drawings, specifications, or other data.

THIRD ANGLE PROJ.

REFERENCE: 2FA1-NXSP-C30E2

EAR#: 12867

UNLESS OTHERWISE SPECIFIED
DIMENSIONS ARE METRIC [INCHES] AND TOLERANCES ARE:

<0.5mm = ±0.05mm	[<0.020 = ±0.002]
0.5 - 6mm = ±0.1mm	[>0.020 - 0.236 = ±0.004]
>6.00 - 30mm = ±0.2mm	[>0.236 - 1.181 = ±0.008]
>30.00 - 120mm = ±0.3mm	[>1.181 - 4.725 = ±0.012]

ANGLES = ±1°

MATERIAL: SEE NOTES

ENGR.1: W.ZHONG

ENGR.2: M.ZHANG

DATE: 11-Jun-25

TITLE: FAKRA STR PLUG FOR RG-58 CABLE REAR BULKHEAD, IP67

SHEET NO. 2 OF 2

SCALE: 2.5:1.0

Amphenol RF

SIZE: B

DRAWING NO. 2FA1-NXSP-C04E2

ITEM NO. 2FA1-NXSP-C04E2

PART NO. 2FA1-NXSP-C04E2

REV: A