PN: 113124-03 10/26

Save this manual for future reference.

BFIT

BRYAN® BOILERS

Condensing with the Power to FIT

AHRI CERTIFIED® www.ahridirectory.org

C ETL LISTED US Intertek

ETL SANITATION LISTED Intertek

SERVICE PARTS MANUAL

399-1500 MBH Boiler and Water Heater

Boiler Models	Water Heater Models
BFIT400C	BFIT400V
BFIT500C	BFIT500V
BFIT650C	BFIT650V
BFIT800C	BFIT800V
BFIT1000C	BFIT1000V
BFIT1250C	BFIT1250V
BFIT1500C	BFIT1500V

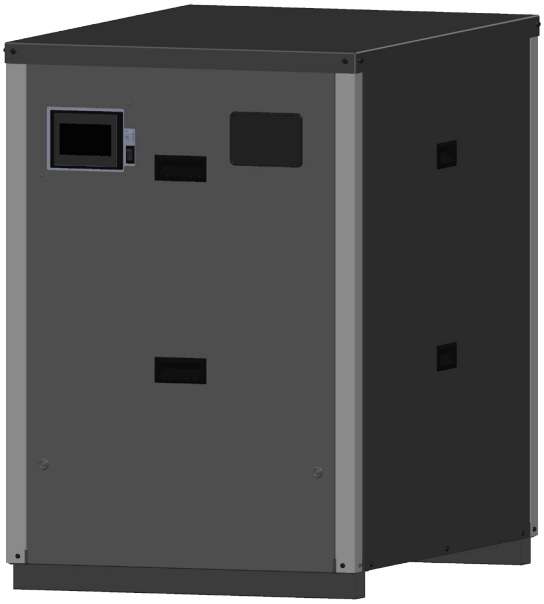

⚠ WARNING

Asphyxiation Hazard. Fire Hazard. Explosion Hazard.

This boiler must be installed, serviced or repaired by a skilled and experienced service technician. Improper installation, adjustment, alteration, service or maintenance can cause severe personal injury, death, or substantial property damage. Read and understand these instructions and entire boiler manual before attempting to service boiler. Up to date boiler manual is posted on manufacturer's website.

⚠ DANGER

Explosion Hazard. Electrical Shock Hazard. Burn Hazard.

This boiler uses flammable gas, high voltage electricity, moving parts, and very hot water under high pressure. Assure that all gas and electric power supplies are off and that water temperature is cool before attempting any disassembly or service. Do not rely solely on temperature/pressure gauge to make this determination.

NOTICE: The replacement parts noted in this manual are for a standard appliance. Different features or components may have been supplied based on the requests of the customer. Consult factory for repair parts on non-standard controls and components. Service Parts can be ordered through your local representative

I. 400-1500 Parts Lists

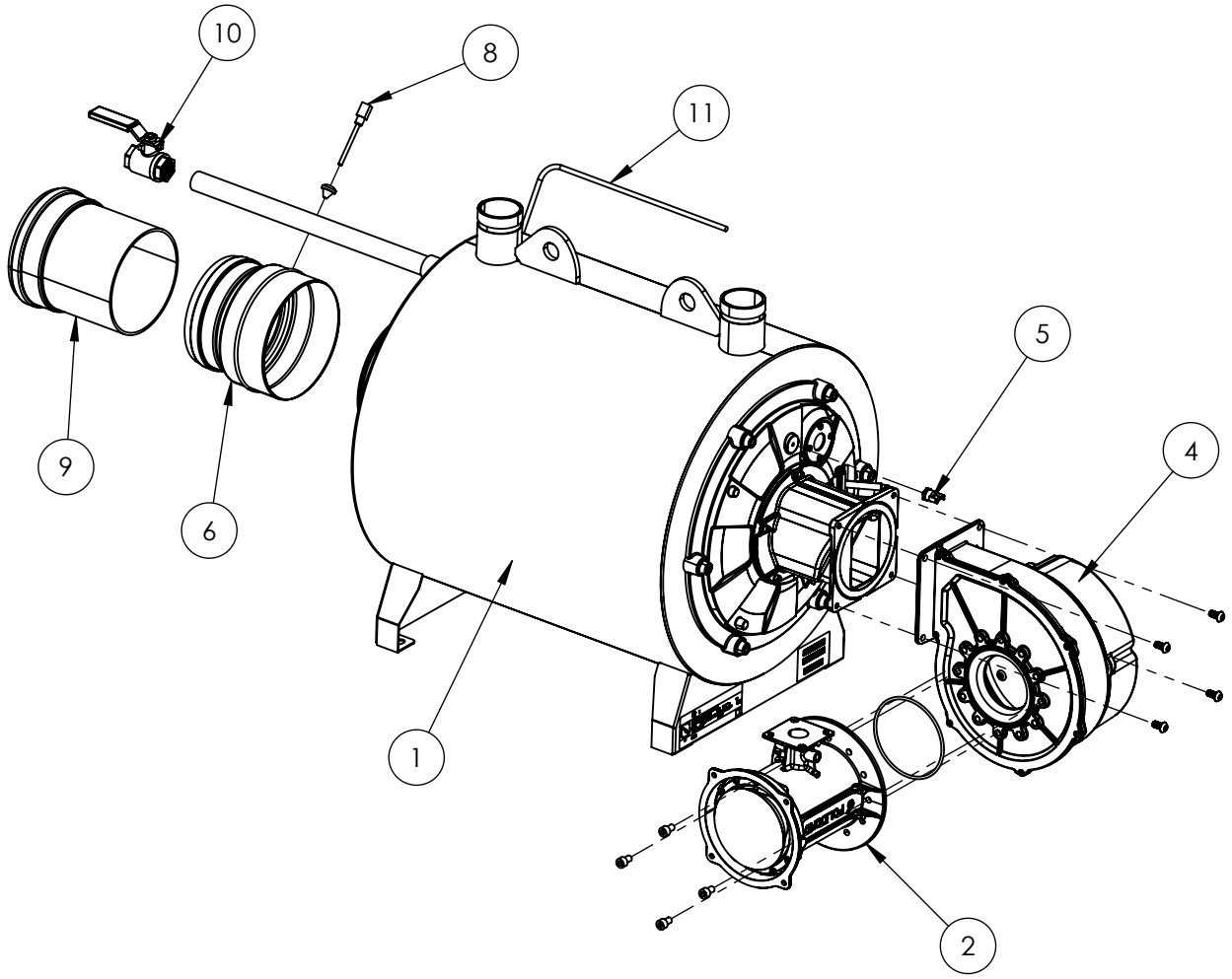

Table 1: Heat Exchanger Assembly

Item No.	Descriptions	Model Size					
		400	500	650	800	1000	1250/1500
1	Heat Exchanger	Contact Local Representative					
2**	Mixer, NG (With Bolts, O-ring, Gaskets)	111545-01	111545-02	111545-03	111545-04	111545-05	113410-01
	Mixer, LP (With Bolts, O-ring, Gaskets)	111544-01	111544-02	111544-03	111544-04	111544-05	N/A
4	Blower (With Bolts, O-ring, Gasket)	112056-01	112056-02	112056-03		112056-04	
5	Thermal Fuse	112119-01					
6	HX Vent Adapter	109203-01		112083-05			112083-01
8	Flue Temp Sensor (with grommet)	112057-01					113444-01
9	Vent Adapter Extension	N/A		112083-03	112083-04	N/A	N/A
10	Drain Valve	112242-01					
11	Block Vent Switch Tubing	112122-01					
12*	HX Flue Adapter Gasket	104501-01		112132-01			112132-02

* Not shown in drawing
** For replacement and for converting fuel types

I. 400-1500 Parts Lists

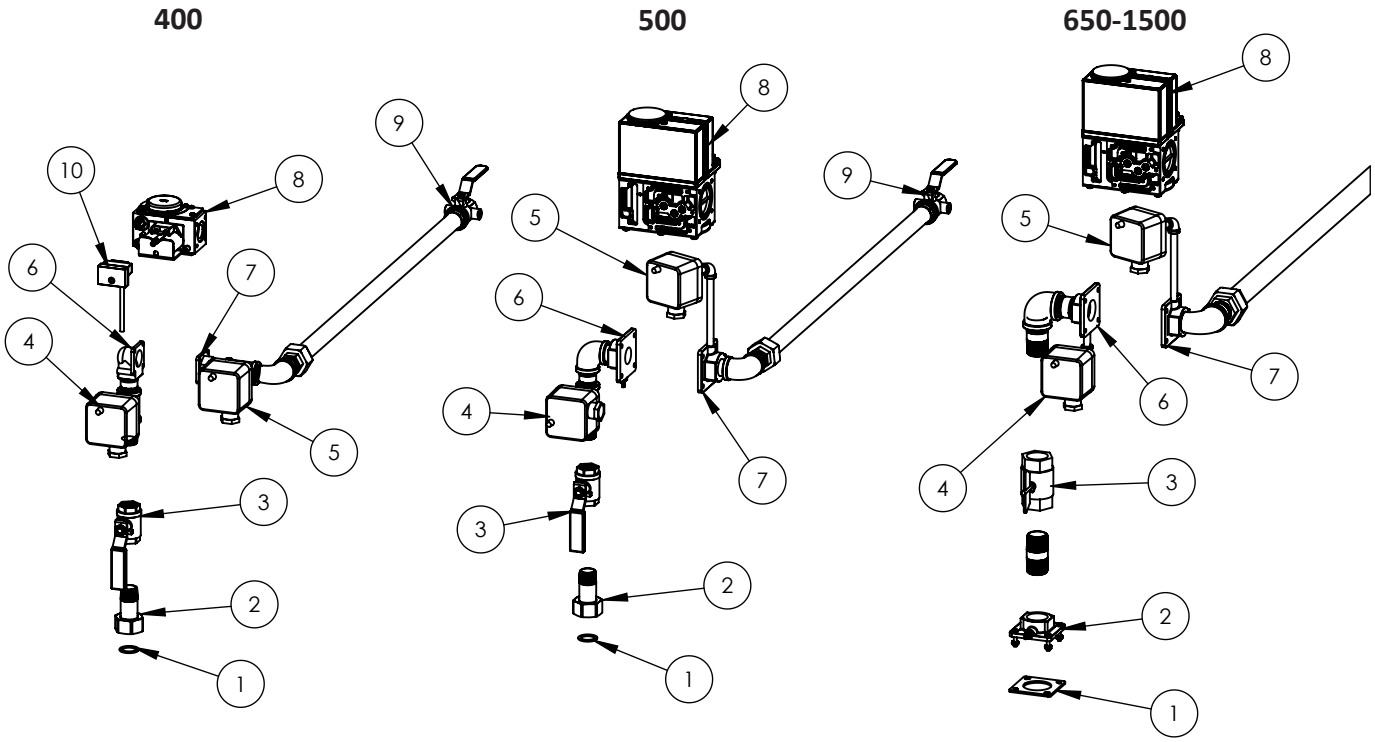

Table 2: Gas Train Assembly

Item No.	Descriptions	Model Size					
		400	500	650	800	1000	1250/1500
1	Gasket, Gas Train to Mixer	108167-01		112069-00			
2	Mixer to NPT Adapter (With gasket and hardware)	108170-01		112069-01	112069-02		113409-01
3	Ball Valve, Secondary Shut-off	112242-02			112242-03		112242-05
4	High Gas Pres. SW	112067-01					
5	Low Gas Pres. SW	112067-02					
6	Gas Valve Flange, Outlet (with o-ring and hardware)	108103-01	112069-01		112069-02		113409-01
7	Gas Valve Flange, Inlet (with o-ring and hardware)	108104-01	112069-01	112069-02			113409-01
8	Gas Valve	112068-01	112068-02	112068-03			113407-01
9	Ball Valve, Main Shutoff	112242-06		112242-04			112242-05
10	Gas Valve Plug Harness	108880-01	N/A				
11*	Tubing for Air Proving Switch and Gas Valve	112053-01					

* Not shown in drawing

I. 400-1500 Parts Lists

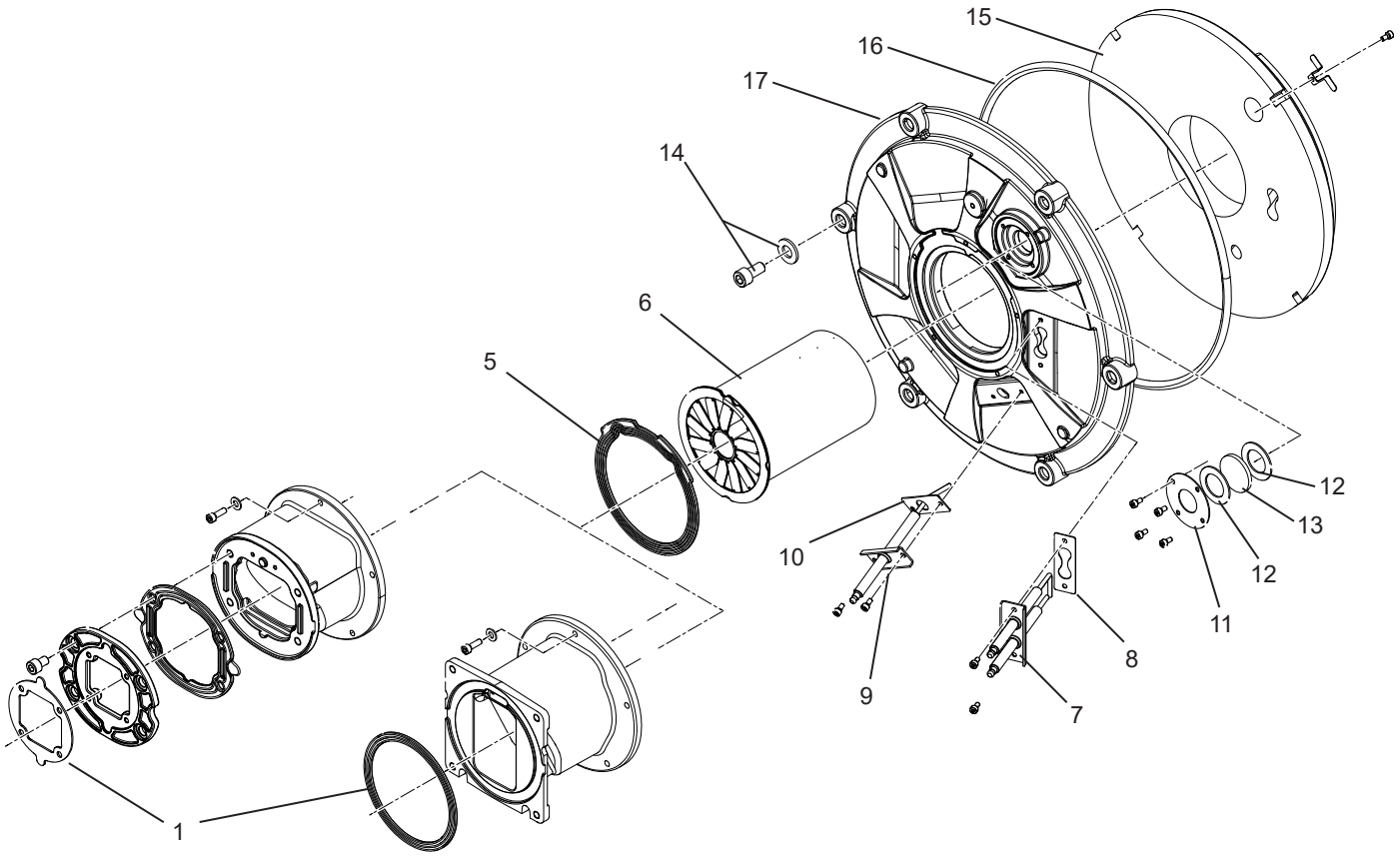

Table 3: Burner Door Assembly

Item No.	Descriptions	Model Size					
		400	500	650	800	1000	1250/1500
1	Blower/Fan Outlet Gasket	112279-03		112279-04			
5	Burner Gasket	113206-01					
6	Burner (with gasket and screws)	112130-01	112130-02	112130-03	112130-04	112130-05	113411-01
7	Ignition Electrode (with gasket and screws)	112131-01					
8	Ignition Electrode Gasket	113207-01					
9	Flame Sensor/Flame Rod (gasket and screws)	112131-02					
10	Flame Rod Gasket	113207-02					
11-13	Observation Port Assembly	112133-01					
14	Burner Door Screws (M10 X 16mm Stainless)	112134-03					
15	Burner Door Insulation	112134-01					
16	Burner Door Rope Gasket	*111346-17*					
17	Burner Door	*111346-27*					
18*	HX Divider Insulation (with clips and screws)	112134-02					

*Not shown in drawing

I. 400-1500 Parts Lists

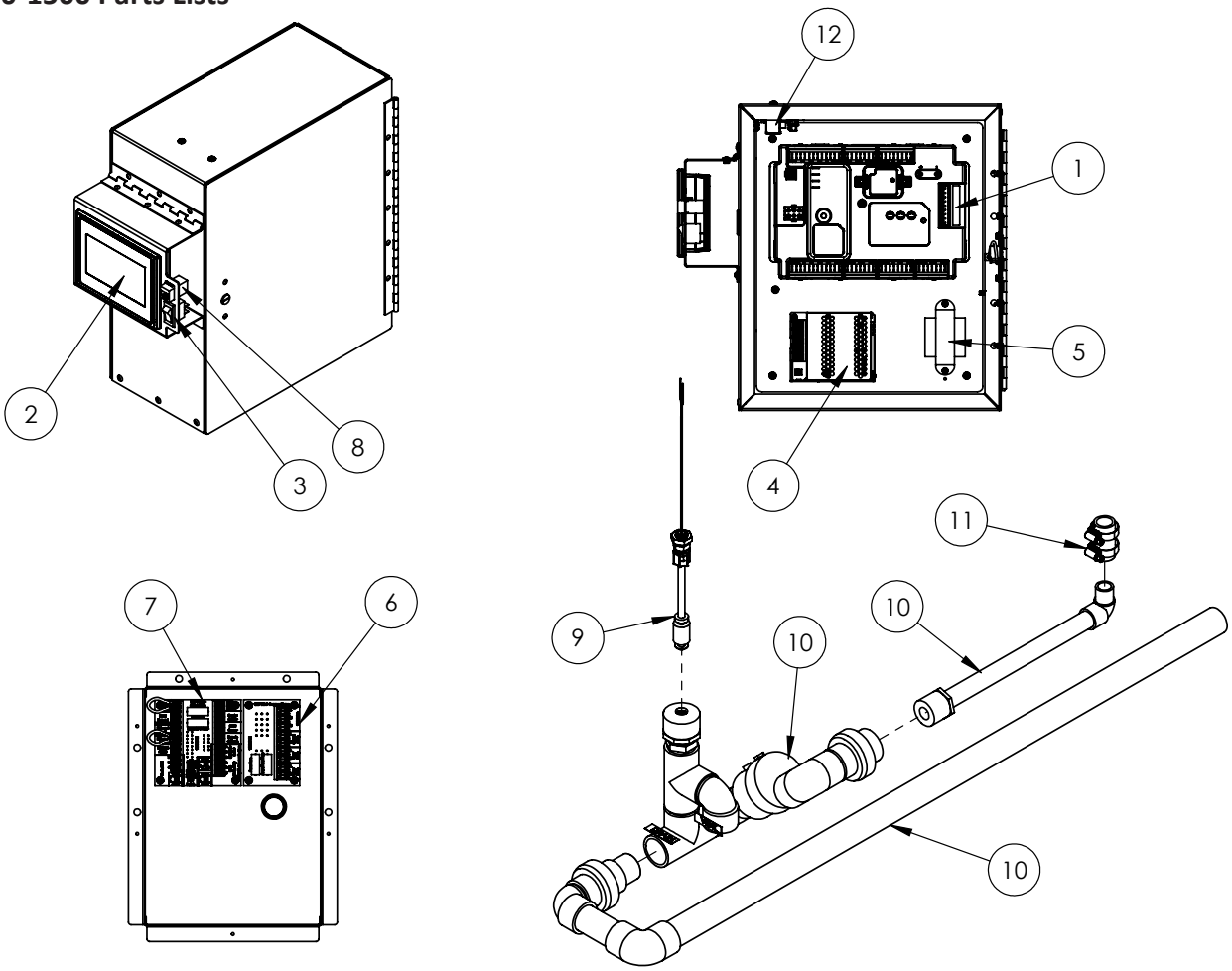

Table 4: Control Box Assemblies and Condensate Piping

Item No.	Descriptions	Model Size					
		400	500	650	800	1000	1250/1500
1	Main Boiler Control	112078-01		112078-02			113406-01
2	Display (with hardware)	112077-01					
3	On/Off switch	112244-02					
4	Display Power Supply, 24VDC	112110-03					
5	24 VAC Transformer	112110-02					
6	120V PCB	106512-01					
7	Low Voltage/Limits PCB	106513-01					113405-01
8	RJ45 Cable for PCB-14	113128-03					
9	Block Condensate Switch	112121-01					
10	Condensate Trap/Switch Assy.	112071-06		112071-07	112071-08	112071-09	113402-01
11	Condensate Line Tube & Clamps	112071-02					112071-10
12	Service Tool PCB-14	113127-01					
12*	Air Proving SW	112052-03					
13*	Blocked Vent SW	112052-01	112052-02	112052-01		112052-02	
14*	Low Water Cut Off	113129-01					
15*	Fuse Kit (Low Voltage & 120V PCB)	112054-01					
16*	Control Box Slide Rails (Pair)	112097-01					

*Not shown in drawing

I. 400-1500 Parts Lists

Table 5: Wire Harnesses

Item No.	Descriptions	Boiler Model Size					
		400	500	650	800	1000	1250/1500
1	120 VAC Wire Harness	113128-01					113401-01
2	24 VAC Wire Harness	113128-02					113401-02
3	Flow Switch harness (connector/ adapter)	112072-07					
4	Gas Valve Harness	112072-05	112072-06				
5	Ignition Harness	112072-04					

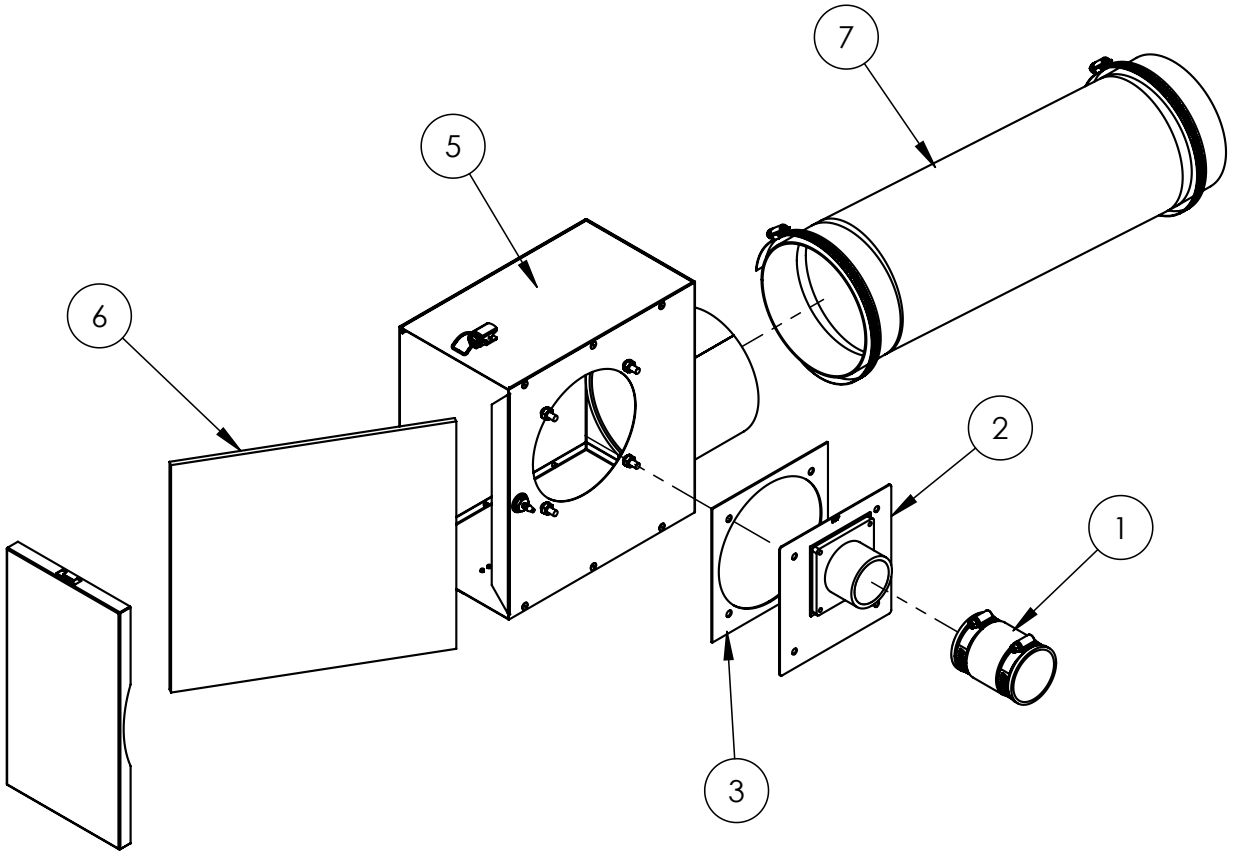

Table 6: Combustion Air Intake Assembly

Item No.	Descriptions	Model Size					
		400	500	650	800	1000	1250/1500
1	Flex Coupling	112070-05		N/A			
2	Filter Box Adapter Assy.	112070-02		N/A			
3	Filter Box/Mixer gasket	112070-04					
5	Filter Box Assembly	112070-01					
6	Intake Filter	112108-01					
7	Intake Flex Duct (with clamps)	112070-03 (38", Cut down to 22" for 400-500)					

I. 400-1500 Parts Lists

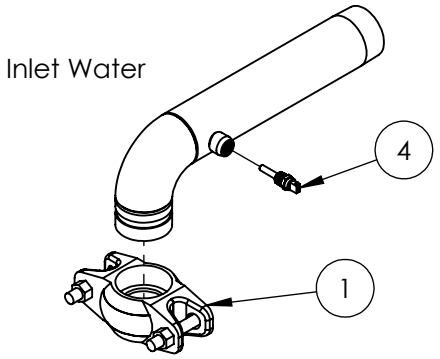

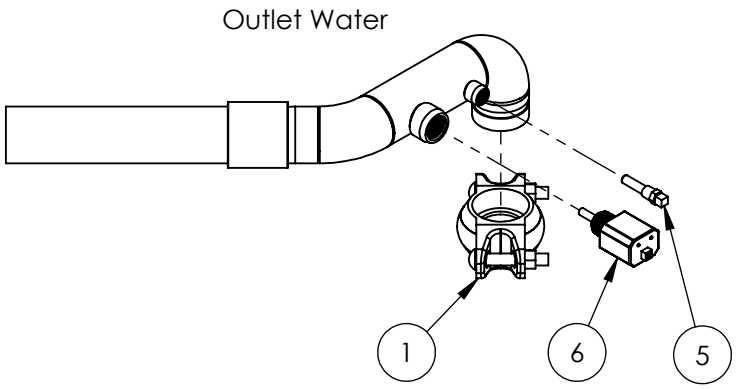

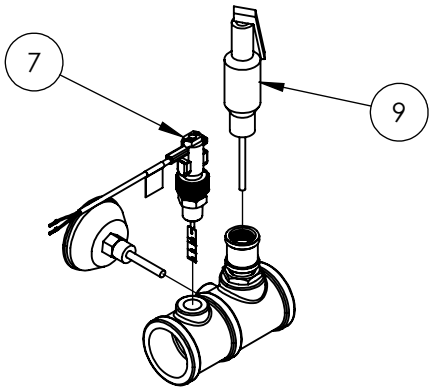

Water Heater (V) Models

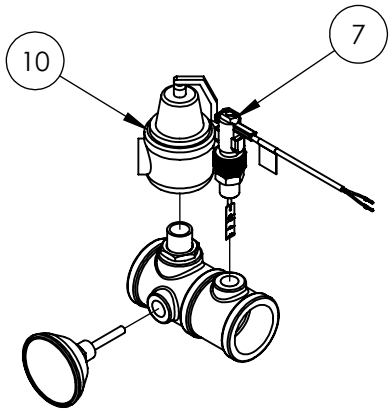

Boiler (C) Models

Table 7: Water Piping Assemblies

Item No.	Descriptions	Model Size					
		400	500	650	800	1000	1250/1500
1	Victaulic Coupling	112243-01					
4	Inlet Temp Sensor	112061-01					
5	Outlet Temp Sensor	112061-02					
6	Low Water Cut Off	113129-01					
7	Water Flow Switch	112063-02					
9	T&P Relief Valve (Water Heater)	112272-02 (125 PSI) 112272-01 (150 PSI)					
10*	**Pressure Relief Valve (Boiler)**						
	30 psi	112273-01		112273-02			
	50 psi	112273-03			112273-04		112273-12
	60 psi	112273-05				112273-06	
	75 psi (standard)	112273-07					
	100 psi	112273-08					
	125 psi	112273-09					
	150 psi	112273-10					

*Includes relief valve only. See Table 11 for converting to relief valve pressure settings other than standard.

I. 400-1500 Parts Lists

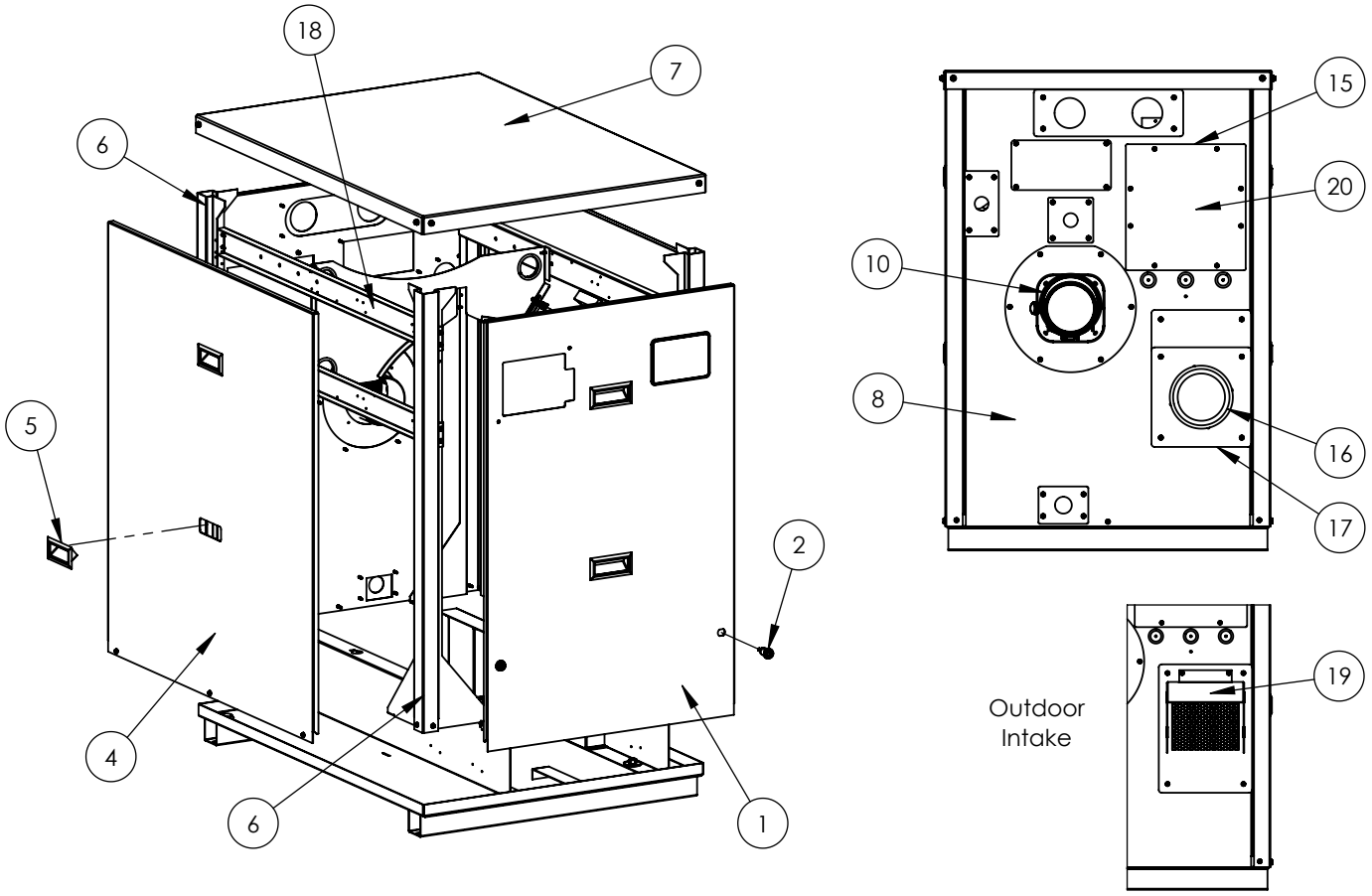

Table 8: Jacket Panels

Item No.	Descriptions	Model Size					
		400	500	650	800	1000	1250/1500
1	Front Panel	113130-01					
2	Front Panel Latch	112246-01					
4	Side Panel	112099-21		112099-22			113400-02
5	Panel Handle	112246-03					
6	Corner Post	112099-01					
7	Top Panel	112099-02		112099-03			113400-01
8	Rear Panel	113130-02					
10	Vent Adapter	107034-02		109227-01			112083-01
10a	Internal Gasket for Stainless	*111335-01*		*111338-01*			-
10b	Internal Gasket for PVC/CPVC	*111336-01*		*111339-01*			-
10c	Internal Gasket for Polypropylene	*111337-01*		*111340-01*			-
15	Rear Control Box Gasket (pair)	113131-01					
16	Intake Adapter	107017-02		112070-06			
17	Intake Panel Gasket	112247-02		N/A			
18	Control Mounting Rails	112099-24		112099-25			113399-01
19	Outdoor Intake Panel	113132-01					
20	Rear Control Panel Cover	113178-01					

II. 400-1500 Optional Parts List

Table 9: Optional Accessories and Service Kits

Accessory/Kit	Model Sizes	Part Number
Annual maintenance kit	400-1500	113021-01
Heat exchanger cleaning service kit	all	112267-01
Condensate neutralizer kit	400-500	107860-08
Condensate neutralizer kit	650-800	107860-09
Condensate neutralizer kit	1000	107860-06
Condensate neutralizer kit	1250-1500	107860-07
Header sensor 1/2" direct immersion	all	109196-01
Remote System Water Temp Sensor with 1/2" NPT Well	all	109847-01
Outdoor Air Temperature Sensor	all (boilers only)	108681-01
Gateway, LonWorks	400-1500	106433-01
Gateway, Protoair Wireless (Wi-Fi)	400-1500	112316-02
Gateway, Protoair with Wireless Enclosure	400-1500	112736-01
Service tool replacement PCB	400-1500	113127-01
EMS Signal Converter Kit	all	108596-02
High Limit w/ Manual Reset Kit:	all	106056-01
Alarm Buzzer w/ Silencing Switch:	400-1500	111736-02
Outdoor venting kit, 4"	400-500	110644-01
Outdoor venting kit, 6"	650-1500	110645-01
Outdoor venting kit, 8"	1250-1500	113442-01
PVC Venting (CPVC Starter Kit)	400-500	111569-01
PVC Venting (CPVC Starter Kit)	650-1000	111569-02
PVC Venting (CPVC Starter Kit)	1250-1500	113404-01
8" CPVC Adapter (1250 - 1500)	1250-1500	112308-01

Table 10: Optional Pump/Hydronic Kits

Accessory/Kit	Model Sizes	Part Number
Heating Boiler Applications		
Hydronic kit, 115/120V Pump (Grundfos), Flanges, Neutralizer	400-500C	109938-21
Hydronic kit, 115/120V Pump (Taco), Flanges, Neutralizer	400C	111851-01
Hydronic kit, 115/120V Pump (Taco), Flanges, Neutralizer	500C	111851-02
Hydronic kit, 115/120V Pump (Grundfos), Flanges, Neutralizer	650-800C	109938-22
Hydronic kit, 115/120V Pump (Taco), Flanges, Neutralizer	650C	111851-03
Hydronic kit, 115/120V Pump (Taco), Flanges, Neutralizer	800C	111851-05
Hydronic kit, 115/120V Pump (Grundfos), Flanges, Neutralizer	1000C	109938-23
Hydronic kit, 115/120V Pump (Taco), Flanges, Neutralizer	1000C	111851-04
Hydronic kit, 115/120V Pump (Grundfos), Flanges, Neutralizer	1250C	109938-05
Hydronic kit, 115/120V Pump (Grundfos), Flanges, Neutralizer	1500C	109938-24
Water Heater or Hot Water Supply Boiler Applications (Stainless Steel Pumps)		
115/120V Pump (Stainless), Flanges	400 (4-12 gpg)	112780-01
115/120V Pump (Stainless), Flanges	400 (12-15 gpg) 500 (4-12 gpg)	112780-02
115/120V Pump (Stainless), Flanges	500, 650, 800 (12-15 gpg) 650, 800, 1000 (4-12 gpg)	112780-03
115/120V Pump (Stainless), Flanges	1000 (12-15 gpg) 1250 (4-12 gpg)	112780-04
115/120V Pump (Stainless), Flanges	1250 (12-15 gpg) 1500 (4-12 gpg)	112780-08
208/230V 1 Ph Pump (stainless), Flanges	1500 (12-15 gpg)	112780-06

Note: Water hardness affects flow rate and pump selection. See I&O manual for more information.

I. 400-1500 Optional Parts list

Table 11: Optional Relief Valve Conversion Kits

Pressure Relief Setting	Model Size					
	400	500	650	800	1000	1250/1500
30 psi	113149-01		113149-02			
50 psi	113149-03			113149-04		113413-01
60 psi	113149-05				113149-06	
75 psi (standard)	113149-07					
100 psi	113149-08					
125 psi	113149-09					
150 psi	113149-10					
Water Heater Relief Valves						
125 psi (standard)	113149-11					
150 psi	113149-12					

Note: Includes relief valve, temperature and pressure gauge, and any necessary fittings.

Notes



Bryan Steam
Peru, IN 46970
Phone: 765-473-6651
Inquiry@bryansteam.com
www.bryanboilers.com