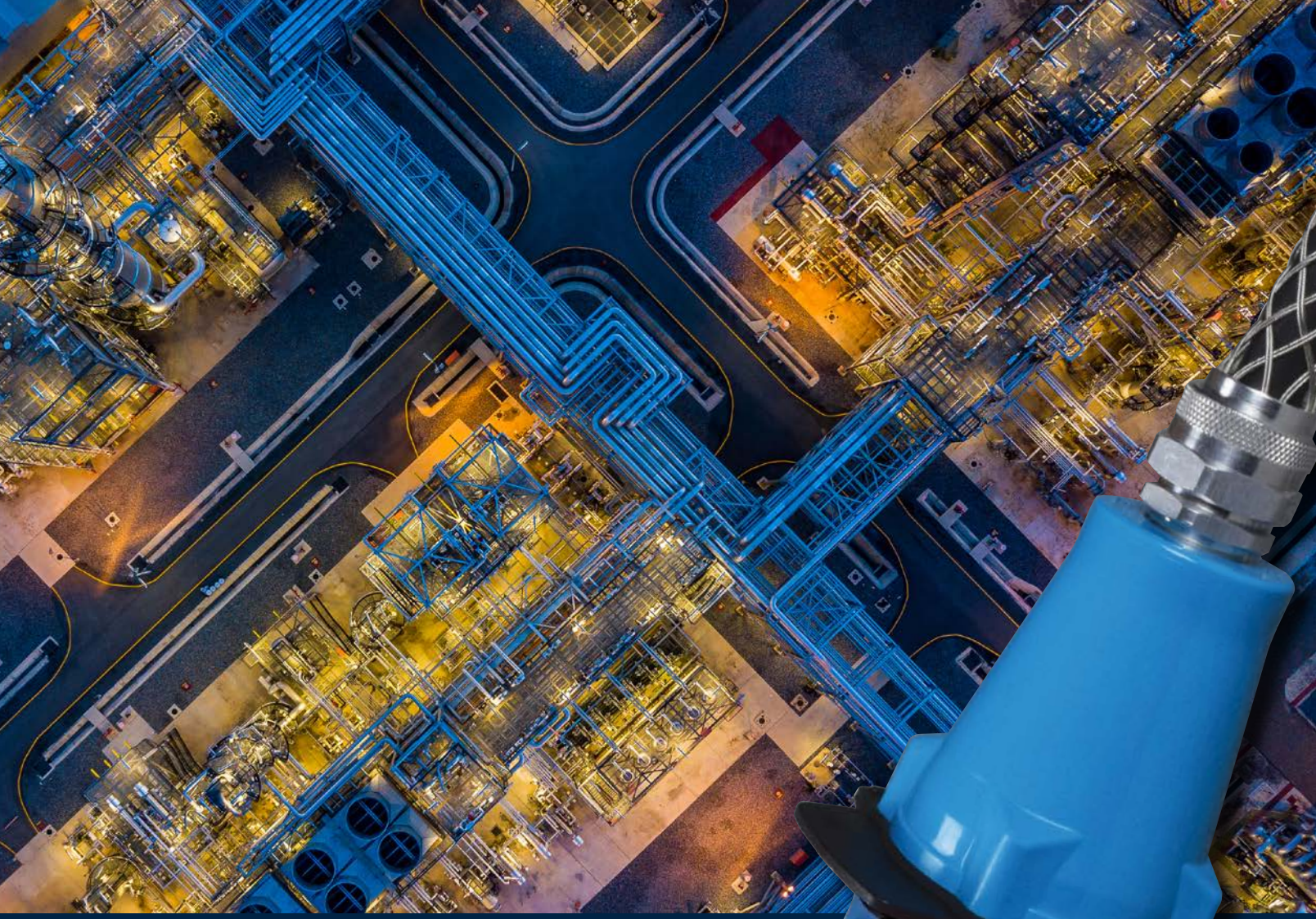

PRODUCT CATALOG

Industrial Plugs & Receptacles



MELTRIC
A COMPANY OF MARECHAL ELECTRIC

Plug into BLUE®

meltric.com

MELTRIC
A COMPANY OF MARECHAL ELECTRIC

PRODUCT CATALOG

INDUSTRIAL PLUGS and RECEPTACLES

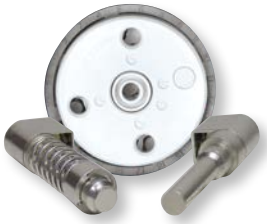









- **Introduction**
  - MELTRIC Overview pg 3
  - Product Features & Benefits pg 5
  - Part Number & Ordering Guide pg 9
- **Switch-Rated Plugs & Receptacles**
  - The Main Differences pg 11
  - Product Summary & Selection Guide pg 17
  - DSN
    Type 4X/IP69/IP69K rated, metal or poly casings. From 20-150 A (3/4-75 hp) pg 25
  - DS
    Type 3R rated (4X option), metal, or poly casings. From 20-200 A (3/4-100 hp) pg 41
- **Multipin Plugs and Receptacles**
  - Multipin
    6-37 pin connectors in poly and metal. From 2 - 50 A pg 57
- **RETTBOX® S**
  - Electromagnetic Self-Ejection
    20 - 30 A pg 83
- **Standard Duty Plugs & Receptacles**
  - DR
    Type 3R rated (4X option), poly, or metal casings. From 30 - 400 A pg 89
  - PN
    IP66/IP67 rated or IP55 rated, poly, or metal. 20 A pg 105
  - PNHT
    For environments up to 465° F (240°C) pg 113
  - DSDC
    DC current rated, poly, or metal casings. From 20 - 200 A (up to 750 VDC) pg 117
- **High Ampacity Plugs & Receptacles**
  - PF/PFQ
    IP66/IP67 rated, metal construction. From 300 - 600 A pg 123
  - DR400
    Type 3R rated, metal casings. 400 A pg 131
  - P66
    IP66/IP67 rated, connectors up to 660 A pg 135
  - CS1000
    Single pole, connectors up to 400 A pg 141
  - SP
    Single Pole, connectors up to 600 A pg 145
  - DSP400
    Single Pole plus contacts pg 149











- **Hazardous Location Plugs & Receptacles**

Hazardous Duty Selection Guide pg 158

DXN

Hazardous rated, poly casings. From 20 - 60 A (3/4-20 hp) pg 159

DXA1

Hazardous rated, metallic casings. 20 A pg 171

Zone 2 DSN/DS/DR/DSDC

Hazardous rated, metallic, or poly casings. 2-250 A (up to 100 hp) pg 175

DX

Hazardous rated, metallic casings. From 20-125 A pg 197

PNCX

Hazardous rated, poly casings. From 5 A pg 207

Multipin

Hazardous rated, 12 to 37 pins. 10 A pg 209

SPeX

Hazardous rated, up to 680 A, 1000 VAC pg 215

- **Power Distribution**

Custom Power Distribution Solutions pg 223

Rubber Power Distribution Boxes pg 225

Disconnect Combinations pg 227

- **Specialty Products**

Cord Grips pg 231

Phase Rotation/Voltage Indicator Assemblies pg 233

- **Reference**

Accessories/Options pg 235

Pilot Contacts pg 237

Pawl Options pg 238

Self-Ejecting Devices pg 239

Lid Configurations pg 241

Microswitch pg 242

Additional Watertightness pg 242

Handles pg 243

Plug Caps pg 245

Adapter Plates pg 246

Technical Manual/Reference pg 247

Parts Index pg 263

MELTRIC® Corporation

Engineered for Safety. Built for Reliability.



At MELTRIC Corporation, our only business is electrical plugs and receptacles. We are focused on providing our customers with the best overall value by offering the safest, highest quality, and most reliable plugs and receptacles. We back them with outstanding service and support.

Product Technology and Safety

The technology behind MELTRIC products was developed specifically to address the shortcomings and safety hazards that occur with the use of traditional plugs and receptacles. In 1952, following the observation of an accident with a pin and sleeve device, Gilles Marechal devised a product that combines silver-nickel, butt-style contacts and the load making and breaking capabilities of a switch in the convenience of a plug and receptacle. MELTRIC licensed this technology in the early 1980s and has been supplying its products to North American customers ever since.

Value

With their unique features and capabilities, MELTRIC products provide users with a safer, more reliable electical connection device. MELTRIC butt-style contacts provide longer operating lives, help users reduce equipment costs and remove arcing hazards caused by live contacts or wrongful disconnection. These advantages, together with competitive pricing, short lead times, and 5-year warranty on electrical contacts make MELTRIC products the best overall value in the plug and receptacle/connector market.

Worldwide Availability

MELTRIC supplies product directly from its factory in Franklin, Wisconsin to customers in the United States, Canada, and Mexico. We can supply outside of North America using our parent company, Marechal Electric Group. Marechal Technology products are manufactured in North America, Europe, South Africa, and Australia.

MARECHAL ELECTRIC
MARECHAL® TECHNOR® MELTRIC®

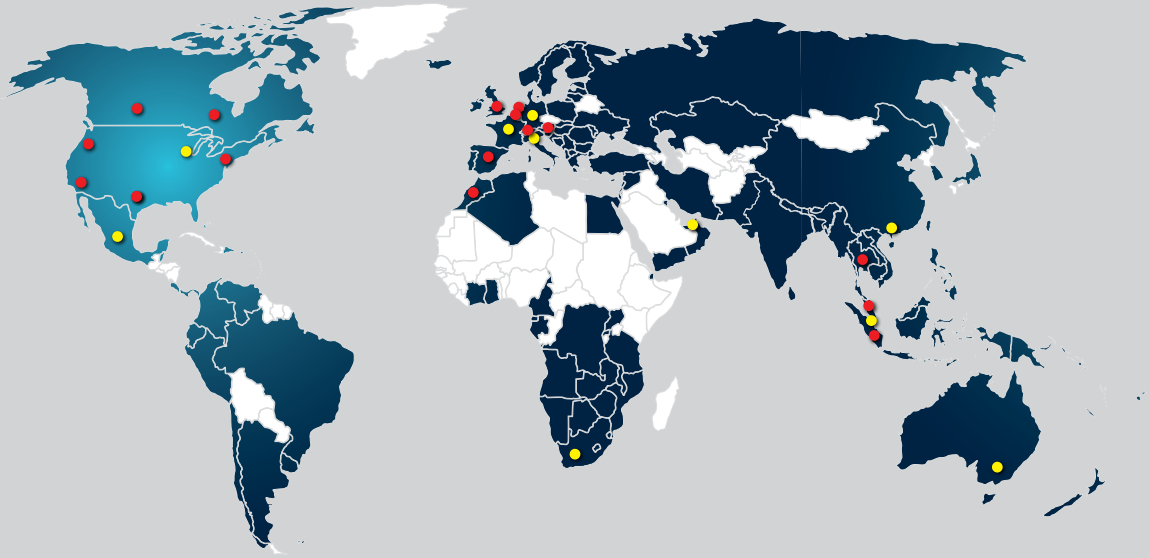

SALES OFFICES & MANUFACTURING PLANTS
COMPANY SALES PRESENCE
SALES AGENTS & DISTRIBUTORS

Service and Support

MELTRIC backs its superior products with outstanding service and support. A network of over 150 sales associates and over 2,000 distributor locations throughout the US, Canada, and Mexico makes purchasing MELTRIC product simple.

MELTRIC's Customer Service group is trained to answer your questions, and is located at our manufacturing facility to help streamline the order fulfillment process. Our engineering team stands ready to provide both application support and custom design solutions incorporating MELTRIC products tailored to meet your needs. Friendly and personal assistance is a call away at **800-433-7642**. The efficient order handling by Customer Service, and engineering help-line allows MELTRIC to provide the fastest answers and shortest lead times in the industry.

Quality

Quality is not just an inspection function at MELTRIC, it starts with intelligent designs, robust materials, clear procedures, process measurement and controls, as well as effective communications. The MELTRIC mission is completed through the care, commitment, and involvement of each of its employees.

MELTRIC is dedicated to the continuous improvement of its critical production and support processes and is ISO 9001:2015 certified. MELTRIC designs and manufactures its products to exceed the requirements of applicable UL, CSA, and IEC standards.





MELTRIC® PRODUCT FEATURES...

Spring-Loaded, Butt-Style Contacts

MELTRIC products feature unique spring-loaded, butt-style contacts. These help improve electrical performance and user safety. Butt-style contacts ensure a consistent connection. The spring loading of these contacts provides a high contact force that remains consistent over thousands of operations reducing the chance of hazard caused by wear and tear.

In conjunction with the ejection springs used on many MELTRIC products, the spring-loaded contacts ensure a quick breaking of the connection. This disconnection style serves as a safety feature arresting arcs and reducing hazards independent of personnel input. The operator will simply push the red button for disconnection.

MELTRIC devices also gradually reach temperature equilibrium and absorb temporary overloads without excessive heating. The unique silver-nickel contact material lowers resistance to ensure optimal energy transfer during working lifespan.

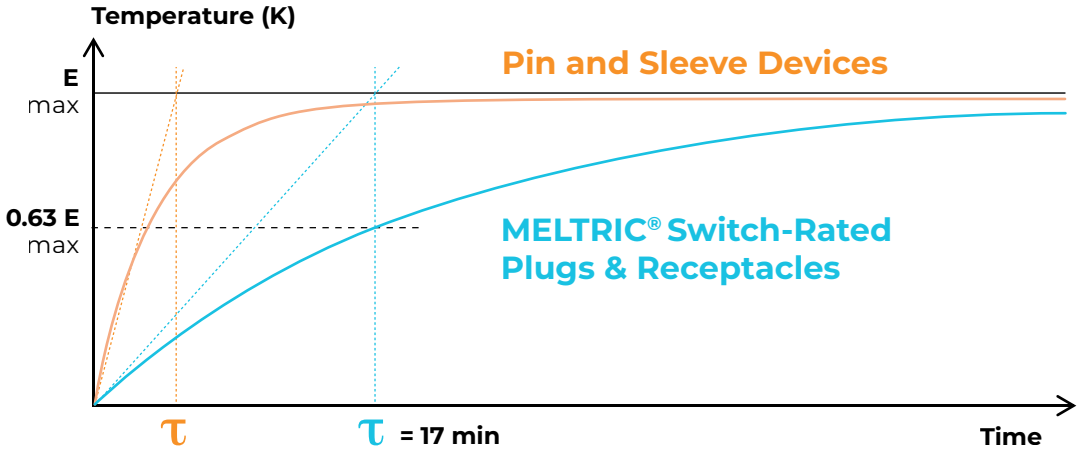

...AND BENEFITS

Silver-Nickel Contact Material

MELTRIC uses solid silver-nickel alloy contacts. The silver-nickel alloy has significant advantages over the brass contacts commonly used on competitive devices.

Silver has very low initial contact resistance and is not negatively affected by oxidation. This helps to give it excellent electrical properties that are maintained even at high temperatures and after tarnishing. Nickel is used to provide hardness and improve mechanical properties.

This combination results in a contact material that has superior electrical capabilities and excellent resistance to wear. Silver-nickel also withstands arcing better than alternative materials.

MELTRIC provides added safety and reliability by providing an arc, wear, and tarnish resistant silver-nickel contact that will stand up in the most demanding of environments.

By contrast, the brass material used in most competitive plug and receptacles has a much higher initial contact resistance and is negatively affected by oxidation. In an oxidized state, the contact resistance of brass is more than 20 times higher than that of silver-nickel. In addition, brass is a soft material that wears rapidly. As the oxidation and wear induced reductions in contact force occur on the brass, contact resistance increases. This increases operating temperature, which causes further oxidation and wear, perpetuating a vicious cycle of degradation. Brass is not arc resistant and is not suitable for making and breaking under load.





Dead-Front Construction

Most MELTRIC products feature dead-front construction, which greatly enhances safety by eliminating access to live parts. On most MELTRIC products, the dead-front is accomplished using a safety shutter that closes upon disconnection and can be opened only by an appropriate mating plug. This ensures the live contacts can only be accessed after the plug is inserted into the receptacle.

The design of the product also ensures that the contacts are de-energized prior to the user removing the plug from the receptacle. On competitive devices access to live receptacle contacts is possible, and on some devices the plug contacts may be accessible, while live, when the plug is being removed. MELTRIC eliminates the risk of contact with live contacts by providing the Dead-front Shutter.



MELTRIC PRODUCT FEATURES...

Push-Button Circuit Disconnection

To disconnect most MELTRIC products, the user simply needs to press the red circle located on the pawl. This automatically disconnects the circuit and ejects the plug to its rest (off) position in the receptacle. If desired, the user can then remove the plug from the receptacle by rotating it slightly then withdrawing it. This mode of operation ensures that it is only possible to remove the plug after its contacts have been de-energized, reducing risk of arc flash and electric shock.



Enclosed Arc Isolation Chambers

The contacts on most MELTRIC products make and break within enclosed arc chambers. This ensures that the arcing, which normally occurs during the making and breaking of the contacts, is contained inside the MELTRIC device. This greatly enhances safety and avoids potential injury to users and/or harm to the outside environment.

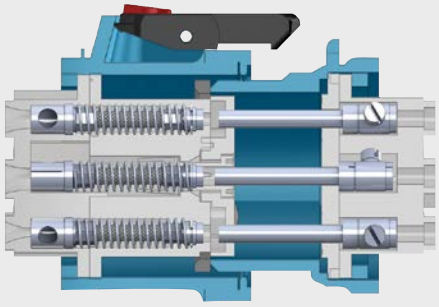

Optional Auxiliary/Pilot Contacts

Many MELTRIC products are available with optional auxiliary/pilot contacts. These integral pilot contacts allow users the convenience and flexibility of controlling auxiliary equipment, monitoring parameters (such as motor temperature), and/or communicating alarms through the same plug and receptacle used to supply power to the equipment. Because the pilot contacts are integral, they also facilitate the rapid change-out or reconfiguration of equipment by eliminating the need for hardwiring or multiple plug connections. Saving both time and effort for monitoring and replacement of equipment.

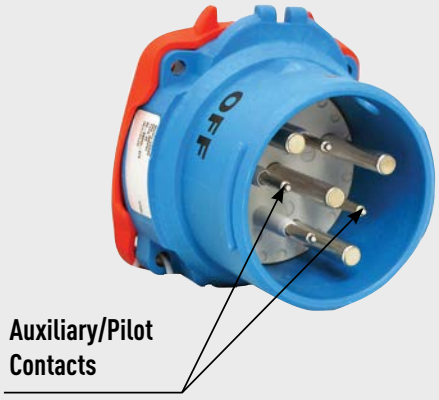

Automatic Watertightness

MELTRIC DS and DSN Series Switch-Rated plugs and receptacles offer Type 4X/IP69/IP69K watertightness as soon as the plug is latched to the receptacle, or the receptacle lid is closed. These devices provide automatic and enhanced protection against windblown dust or rain, splashing water, and hose-directed water.

Most pin and sleeve devices require a user to tighten an additional plastic ring to achieve rated weathertightness. Users frequently fail to do this, resulting in leakage.



...AND BENEFITS

Spring-Assisted Terminals

The loosening of terminal screws is a common cause for failure on standard plugs and receptacles. MELTRIC provides a more secure and reliable connection with its unique and patented spring-assisted terminal design.

As the terminal screw is tightened against the conductor, the associated pressure expands the split terminal body, causing the spring ring surrounding the terminal to deform into an elliptical shape. The natural tendency for the spring ring to return to its original size and shape ensures that a constant pressure is maintained on the conductor. This allows the terminal to effectively provide superior resistance to vibration, shock, strand settlement, material creep, and thermal cycling, reducing the chance for unwanted disconnection during use.

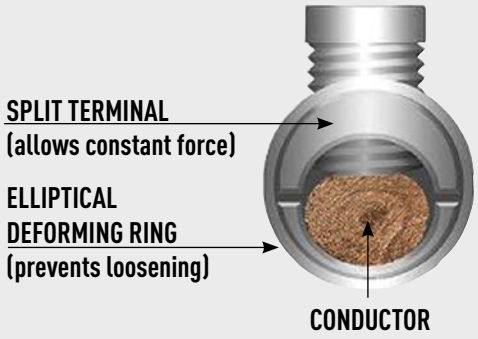

Lockout/Tagout Capability

Most MELTRIC plugs and receptacles facilitate compliance with OSHA Lockout/Tagout requirements. Only a lock or lockout hasp and tag are needed to ensure that the plug is properly locked out and tagged out. Because the lockout provisions are integrated into the device – it is always available when you need it. On most models, the lockout provision is a simple 5/16" hole in the inlet shroud, this facilitates the insertion of a lockout hasp which prevents the mating of inlet and receptacle.

An optional provision for locking out MELTRIC receptacles is also available. In most cases this is accomplished via a specially machined hole in the receptacle pawl which allows insertion of a padlock to secure the receptacle lid in a closed position. This same optional provision can be used to prevent removal of the plug if desired.

By comparison, to lock out most competitive devices, an additional third-party 'lockout shield or 'plug cap' is required. These devices can be expensive and are often lost, broken, or not available when you need them. MELTRIC makes your lockout/tagout provisions easier to perform with integrated lockout provisions located on the electrical device close to the work area.

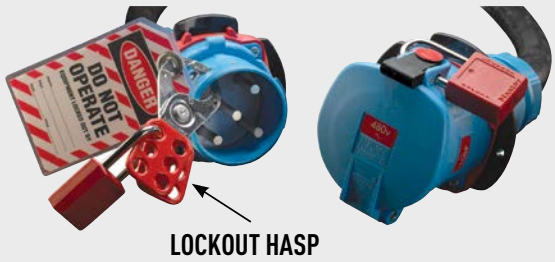

Engineered Solutions

At MELTRIC, our products are ordered and assembled to meet precise use and installation requirements. This dedication ensures that you benefit from The MELTRIC Advantage, offering versatility, efficiency, and functionality often overlooked by other manufacturers. Once you select male inlets, female receptacles, and matching accessories, our skilled team gathers the components, shipping them quickly. With MELTRIC, modular thinking is key. This approach allows us to build devices tailored to your specifications and deliver them in record time.



MELTRIC PART NUMBERING...



First seven (7) digits for a basic inlet or receptacle part number

One (1) to six (6) suffixes for special features

6 3	—	3	4	0 4	3	X	X	X	—	Y	Y	Y

MELTRIC Product Line Type and Casing Material

PN/PN7c
01 = Blue Poly
09 = Blue Metal

PN12c
03 = Blue Poly
07 = Blue Metal

PXN12c
06 = Black Metal

PNCX
06 = Black Poly

RETTBOX
15 = Blue Poly

DN
19 = Blue Metal

DXN
22 = Black Poly

DXA1
28 = Black Metal

DX
26 = Black Metal

DS
33 = Blue Poly
35 = Black Poly
36 = Black Metal (HazLoc)
37 = Blue Metal

DXN25/37c
36 = Black Metal

DR
31 = Blue Poly
35 = Black Poly
36 = Black Metal (HazLoc)
39 = Blue Metal

SPeX
42 = Black Poly

CS1000/SP
44 = Black Poly

DSP
31 = Blue Poly

P66
41 = Gray Metal

PFQ/PF
47/49 = Gray Metal

DSN
63 = Blue Poly
65 = Black Poly
66 = Black Metal (HazLoc)
67 = Blue Metal

AMP (A) Rating

DSN
1 = 20
3 = 30
6 = 60
8 = 100
9 = 150

DS
1 = 20
3 = 30
6 = 60
9 = 100
2 = 200*

DR
1 = 30
3 = 50
6 = 100
9 = 150
2 = 250*
4 = 400*

PN20
N = 20 (IP66/IP67)

PNCX
E = 5

PNHT
2 = 20

DXN
1 = 20
3 = 30
6 = 60

DXA1
1 = 20

DX
2 = 20*
3 = 32*
6 = 63*
9 = 125*

P66
6 = 660

PF
3 = 300*
4 = 400*
6 = 600*

PFQ
3 = 300*

DN
1 = 20*(DN9)
6 = 20*(DN20)

* Available in metal only.

Form and Mounting

Female
4 = Receptacle

Male
8 = Inlet

DX, DXN37c, PXN12c, SPeX Only

Female
0 = Receptacle on box
3 = Connector
4 = Receptacle

Male
1 = Plug
6 = Inlet on Box

Voltage Polarization

Position		Voltage	Hz
01	=	220 - 250 / 380 - 440	50
02	=	20 - 24	60
03	=	110 - 130 / 190 - 230	50
04	=	277/480	60
06	=	25 - 28	50
07	=	125/250	60
08	=	20 - 24	50
09	=	480 - 500	50
10	=	110 - 130	DC
11	=	115 - 127 / 200 - 220	400
12	=	115 - 127 / 200 - 220	200
13	=	40 - 48	50
14	=	347/600	60
16	=	120/208	60
17*	=	125/250	60
18*	=	347/600	60
19	=	380 - 440 / 660 - 690	50
20	=	220 - 250	DC
22	=	577/1000	50
23*	=	120/208	60
24*	=	277/480	60

* For DR devices.

Phasing

AC
2 = 2P+G
3 = 3P+G
5 = 1P+N+G
6 = 2P+N+G
7 = 3P+N+G
A+ = 2P
B+ = 3P
C+ = 3P+N
D+ = 1P+N
G+ = 2P+N

DC
8++ = 2P+G
9 = 2P+G
Z+ = 2P
P = 2P+2P+G

+ For 50 V or less only.
++ Includes jumpers.

Notes:
- On metal devices, inlets are not painted, receptacles are painted.
- This is the Keying Standard for MELTRIC products. Suffixes are available to accommodate non-interchangeable devices of the same size at the same voltage. Please ask for more details.

...AND ORDERING GUIDE

A MODULAR SYSTEM

MELTRIC products are ordered and assembled in a modular fashion. Customers should select the desired male inlet and female receptacle part numbers. Then matching accessories such as handles, angles, and junction boxes should be identified and added to the order to create plugs, connectors, or other configurations. This modular system allows MELTRIC to build and ship product to customer specifications in a very short time.

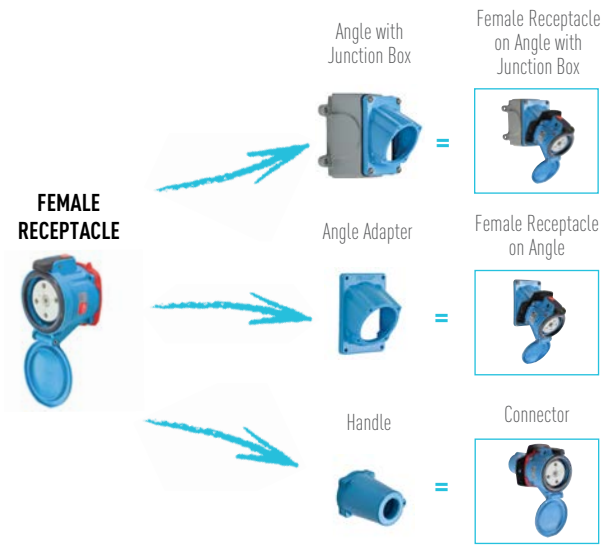

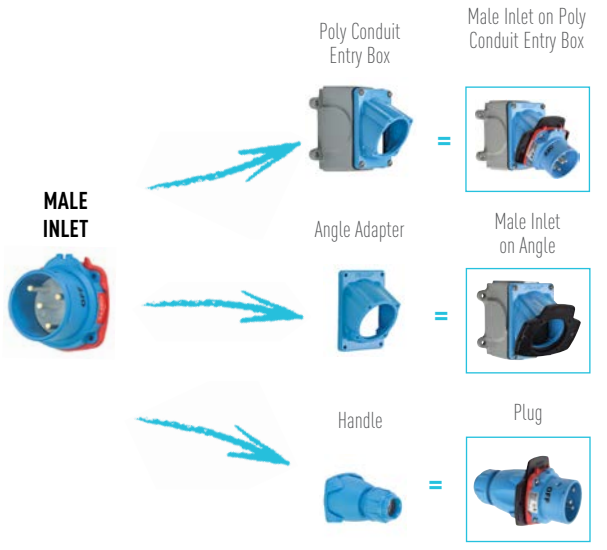

EXAMPLE



EXAMPLE



TYPICAL ORDER

	63-34047	Female Receptacle
	512M3	Angle Adapter for Female
	63-38047	Male Inlet
	61-3A346	Finger Drawplates
	512P0D21	Handle for Male

SWITCH-RATED
Plugs & Receptacles

THE MELTRIC® ADVANTAGE



DECONTACTOR™ Technology

Pressing the pawl/button on the receptacle will safely switch off power to the load. The plug can then be withdrawn in complete safety. (Cutaway model shown for illustration purposes)

Like most MELTRIC products, Switch-Rated plugs and receptacles feature:

- Spring-loaded, butt-style contacts
- Silver-nickel contact materials
- Dead-front design
- Enclosed arc isolation chambers
- Spring-assisted terminals
- Auxiliary contacts

MELTRIC Switch-Rated plugs and receptacles have additional features, including:

- UL & CSA switch-ratings
- Horsepower ratings
- Short circuit ratings up to 100 kA with appropriate overcurrent protection

Switch and Horsepower Ratings

MELTRIC Switch-Rated products are a combination plug, receptacle and non-fusible disconnect switch in the same device. Their integral switch technology ensures the safe breaking of resistive and inductive loads (up to 100 hp or 200 A) before an operator can physically remove the plug from the receptacle.

They are UL and CSA approved for both "branch circuit" and "motor circuit" disconnect switching, making them ideal for connecting motors, welding machines, and virtually any other electrical equipment.



To match the functionality of a Switch-Rated device, it would take a pin and sleeve plug plus a squared interlock..

Short Circuit Ratings

MELTRIC Switch-Rated plugs and receptacles help ensure worker safety, even in fault conditions. They are rated to close into and withstand short circuit currents of up to 100 kA. The protection far surpasses that offered by other plugs and receptacles—even surpassing the short circuit protection offered by most manual motor controllers and mechanical interlocks.

UL & CSA Standards

To achieve their UL 2682 switch ratings, MELTRIC Switch-Rated plugs and receptacles have passed tests that far exceed those of ordinary UL 1682 listed pin and sleeve devices. These tests include horsepower/locked rotor overload tests from the UL 508 standard for Industrial Control Equipment and electrical endurance and short-circuit make-and-withstand testing from the UL 98 standard for Enclosed and Dead-Front Switches.

To illustrate how the electrical and mechanical endurance of MELTRIC Switch-Rated plugs and receptacles far exceeds standard plugs, the following chart compares the test requirements for achieving a Switch-Rated plug & receptacle listing with those required for a standard pin and sleeve plug & receptacle listing. (Note: p.f. = Power Factor - for more information see pg 246)

Test Requirements and Ratings Comparison Table

TEST	UL SUBJECT 2682 (used for both UL & CSA listings) SWITCH-RATED PLUGS & RECEPTACLES MOTOR CIRCUIT/BRANCH CIRCUIT DISCONNECT SWITCHING (Tests passed by MELTRIC devices)	UL 1682 & CSA 22.2 No. 182.1 PLUGS, RECEPTACLES & CABLE CONNECTORS OF THE PIN & SLEEVE TYPE	
		CURRENT INTERRUPTING (minimum requirements)	NON-CURRENT INTERRUPTING (minimum requirements)
Temperature Rise	< 30°C	< 30°C	< 30°C
Voltage Withstand	3,000 VAC for 1 minute	3,000 VAC for 1 minute	3,000 VAC for 1 minute
Overload General Use Devices	50 Operations @ 150% rated current (p.f. = .75 - .80)	50 Operations @ 150% rated current (p.f. = .75 - .80)	3 Operations @ 150% rated current (p.f. = .75 - .80)
Mechanical Endurance (including Electrical Operations)	6000 Operations	15-20 A = 5000 Operations 21-63 A = 2000 Operations 64-250 A = 500 Operations	15-20 A = 5000 Operations 21-63 A = 2000 Operations 64-250 A = 250 Operations
Electrical Endurance (with load)	6000 Operations @ rated current & voltage (p.f. = .75 - .80)	15-20 A = 5000 Operations 21-63 A = 1000 Operations[1] 64-250 A = 250 Operations[1] @ rated current & voltage (p.f. = .75 - .80)	–
Overload - Locked Rotor (Horsepower Rated Devices) and Electrical Endurance	50 Operations @ 600% of Full Load Amperage (p.f.=.40-.50) + 6000 Operations @ rated horsepower FLA (p.f. = .75 - .80)	50 Operations @ 600% of Full Load Amperage (p.f. = .40 - .50)	–
Short Circuit Withstand	≥ 10 kA+ (600 V and ≤ .50 p.f)	≥ 10 kA (600 V and ≤ .50 p.f)	–
Short Circuit Closing	≥ 10 kA+ (600 V and ≤ .50 p.f)	–	–

[1] Testing alternates between mechanical & electrical operations. This reduces the severity of the electrical test by allowing additional cooling time during electrical testing.
+ All MELTRIC Switch-Rated devices (except DS200) are UL listed with short circuit ratings of at least 65 kA achieved at 600 VAC and ≤ .15 power factor.

See page 252 for specific ratings and associated fusing for each model.





BENEFITS OF USING MELTRIC SWITCH-RATED DEVICES

Ensure Worker Safety

Switch-Rated plugs and receptacles ensure safety by eliminating hazards associated with pin and sleeve and twist-type devices.

- The integral switching function ensures that the plug contacts are de-energized before an operator can remove the plug from the receptacle. The dead-front design prevents unintended access to live parts.
- Spring-loaded, silver-nickel butt-style contacts maintain proper contact force, withstand arcing, resist wear, and maintain low contact resistance. This ensures the integrity of the connection over thousands of operations and eliminates performance and safety problems common to plugs with brass contacts.
- Spring-loaded plug and receptacle disengagement with push button operation ensures fast and easy load breaking, which minimizes arcing during disconnection. Enclosed arc isolation chambers eliminate arc flash hazards.
- Horsepower, switch, and short-circuit ratings provide additional protection during locked-rotor or other significant overload situations.



Simplify Code Compliance

Switch-Rated devices provide a simple and cost-effective means of helping facilities achieve compliance with the National Electrical Code and NFPA 70E.

NEC Compliance

Articles 430.101 to 430.113 of the National Electrical Code regulate the means of motor disconnection (Canadian Electrical Code section 28-600 to 28-604). They require motors to have readily accessible, line-of-sight disconnects that are an approved switch or a properly rated plug and receptacle.

- ***430.102*** *A disconnecting means must be located in sight of the motor and driven equipment.*
- ***430.107*** *The disconnecting means must be readily accessible.*
- ***430.109*** *The disconnecting means may be an approved switch or horsepower rated plug and receptacle.*

MELTRIC Switch-Rated plugs and receptacles are both horsepower and Switch-Rated. They can function as a line-of-sight disconnect in addition to providing a convenient plug and play power connection for the motor. Installing a Switch-Rated device eliminates the need for an auxiliary disconnect switch.

NFPA 70E (CSA Z462)

This OSHA consensus standard covers electrical safety-related work practices and procedures for employees who work on or near exposed energized electrical conductors or other live circuit parts. Relevant requirements include:

Power must be proven to be off before work can be performed. This requires:

- The safe interruption of the load and opening of the disconnect
- Visual verification or voltage testing to ensure de-energization

The potential electrical hazard must be identified and documented.

- An arc flash risk assessment must be performed
- Flash protection boundaries must be determined

Appropriate steps must be taken to protect persons working near live parts or within the flash protection boundary.

- PPE must be worn based on incident energy exposure levels (cal/cm2)
- Only properly qualified persons are allowed to perform work

...THROUGHOUT YOUR FACILITY

Wiring and connection systems utilizing conventional switches and/or pin and sleeve devices would typically require all of the previously listed protective measures to comply with NFPA 70E or CSA Z462. By using MELTRIC Switch-Rated plugs and receptacles to connect equipment, users can very simply comply with these requirements.

Switch ratings ensure the safe interruption of the load. Visual verification that the power is off is provided when the plug is removed from the receptacle. A dead-front design prevents an operator from being exposed to live parts, eliminating the need to perform hazard analysis, establish flash protection boundaries and use electrical personal protective equipment.

A Comparison of the Motor Change-Out Process

MOTOR CONNECTED WITH A MELTRIC MOTOR PLUG	MOTOR CONNECTED WITH A COMPETING PLUG & RECEPTACLE	MOTOR HARDWIRED TO A BLADED DISCONNECT SWITCH
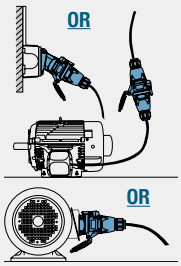 ▸ Cord connection allows easy line-of-sight location ▸ Dead-front eliminates access to live parts and need for cumbersome PPE ▸ Ability to safely make & break under load eliminates the need for interlocks ▸ ≥10kA short circuit make-and-withstand rating ensures safety during reenergization	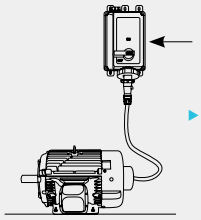 ▸ Expensive mechanical interlocks are required since these plugs & receptacles cannot safely make & break under load ▸ The interlock must be mounted on a fixed surface this may make line-of-sight location more difficult	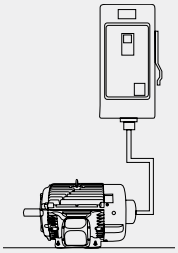 The disconnect switch may be difficult to install in line-of-sight of the motor. 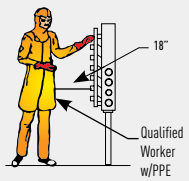
MOTOR CHANGE-OUT PROCESS	**MOTOR CHANGE-OUT PROCESS**	**MOTOR CHANGE-OUT PROCESS**
1. Depress the pawl on the receptacle to break the circuit 2. Mechanic removes plug from receptacle 3. Apply lockout/tagout as required 4. Mechanic removes old/installs new motor 5. Mechanic inserts plug into receptacle **MELTRIC** makes it Safe and Easy	1. Open interlock switch 2. Determine PPE requirements and obtain permit for electrical work 3. Remove interlock cover 4. Verify de-energization with a voltmeter test 5. Remove plug 6. Apply lockout/tagout as required 7. Remove old/install new motor 8. Insert plug into receptacle	1. Switch disconnect to OFF position 2. Apply lockout/tagout 3. Perform shock/arc flash risk assessment 4. Obtain permit for energized electrical work 5. Suit up with appropriate PPE 6. Remove the disconnect switch cover 7. Voltage test to verify de-energization 8. Disconnect motor from hardwiring 9. Remove old/install new motor 10. Connect new motor to hardwiring 11. Jog the motor to ensure proper rotation

Reduce Equipment and Installation Costs

The ability of MELTRIC Switch-Rated devices to safely make and break under full load eliminates the need for the expensive interlocks that are required with pin and sleeve devices. Their ability to function as the NEC required line-of-sight disconnect switch eliminates the need for auxiliary disconnect switches. Optional pilot contacts can eliminate the need of auxiliary connectors in control circuits.

Reduce Equipment Changeout Downtime and Cost

Using MELTRIC Switch-Rated plugs and receptacles to connect motors and other equipment instead of hardwiring can help reduce equipment change-out time by as much as 50%. With new motors pre-wired with MELTRIC plugs or inlets, the only electrical connection required during the change-out will be to plug in the new motor. Thus, a mechanic will be able to perform the change-out without the immediate aid of an electrician. This avoids the inconvenience of scheduling an electrician for a service call eliminating extra downtime required for wiring. The pre-wiring of replacement motors with MELTRIC plugs or inlets can be done off-site and during the convenience of non-downtime periods. This makes MELTRIC plugs and receptacles an ideal choice for 'plug and play' and modular process applications.

SELECTING THE RIGHT MELTRIC SWITCH-RATED PLUG & RECEPTACLE

All SWITCH-RATED devices (DSN and DS) feature DECONTACTOR™ Technology:



- UL and CSA switch-ratings
- Short circuit closing and withstand protection (10 kA to 100 kA)



- Silver-nickel contact material
- Spring-loaded, butt-style contacts



- Dead-front safety shutter
- Optional auxiliary contacts



DSN Series
(pages 25-40)

Choose DSN Series for its...

- Compact, lightweight design
- Automatic Type 4X/IP69/IP69K watertightness
- Horsepower ratings up to 75 hp

Common Applications

- Wet or washdown environments
- Plug and play electrical connections



DS Series
(pages 41-56)

Choose DS Series for its...

- Amperage range (up to 200 A)
- Larger conductor capacities
- Horsepower ratings up to 100 hp

Common Applications

- Heavy industry
- High amperage equipment



DSN Models and Ratings

MODEL	CASING MATERIAL	MAXIMUM VOLTAGE (VAC)	AMPERAGE RATING	MAXIMUM NUMBER OF CONTACTS		ENVIRONMENTAL RATING	MAXIMUM HORSEPOWER RATING	
				MAIN	AUXILIARY		480 VAC	600 VAC
DSN20	POLY	600	20 A	3P+N+G	2*	Type 4X/IP69/IP69K	7.5 hp	7.5 hp
DSN30	POLY	600	30 A	3P+N+G	2	Type 4X/IP69/IP69K	15 hp	15 hp
DSN60	POLY	600	60 A	3P+N+G	4	Type 4X/IP69/IP69K	20 hp	20 hp
DSN100	POLY OR METAL	600	100 A	3P+N+G	4	Type 4X/IP69/IP69K	50 hp	50 hp
DSN150	POLY OR METAL	600	150 A	3P+N+G	6	Type 4X/IP69/IP69K	75 hp	75 hp

* DSN20 uses shunt contacts

DS Models and Ratings

MODEL	CASING MATERIAL	MAXIMUM VOLTAGE (VAC)	AMPERAGE RATING	MAXIMUM NUMBER OF CONTACTS		ENVIRONMENTAL RATING	MAXIMUM HORSEPOWER RATING	
				MAIN	AUXILIARY		480 VAC	600 VAC
DS20	POLY	600	20 A	3P+N+G	2	Type 3R	7.5 hp	10 hp
DS30	POLY	600	30 A	3P+N+G	4	Type 3R	15 hp	15 hp
DS60	POLY OR METAL	600	60 A	3P+N+G	4	Type 4X/IP69/IP69K	25 hp	25 hp
DS100	POLY OR METAL	600	100 A	3P+N+G	6	Type 4X/IP69/IP69K	30 hp	–
DS200	METAL	600	200 A	3P+N+G	6	Type 4X/IP69/IP69K	100 hp	100 hp

MELTRIC PRODUCT SUMMARY...

		Model	Size	Amp (A) Rating	Maximum Voltage Rating		Environmental Ratings		Available Casing Materials			Maximum Number of Contacts	
					VAC	VDC	Type	IP	POLY	METAL	SS	Main	Aux.
Switch-Rated		**DSN20**	1	20	600	-	4X	69/69K	POLY	-	-	3P+N+G	2**
		DSN30	2	30	600	-	4X	69/69K	POLY	-	-	3P+N+G	2
		DSN60	3	60	600	-	4X	69/69K	POLY	-	-	3P+N+G	4
		DSN100	4	100	600	-	4X	69/69K	POLY	METAL	-	3P+N+G	4
		DSN150	5	150	600	-	4X	69/69K	POLY	METAL	-	3P+N+G	6
		**DS20**	2	20	600	-	3R+	-	POLY	-	-	3P+N+G	2
		DS30	3	30	600	-	3R+	-	POLY	-	-	3P+N+G	4
		DS60	4	60	600	-	4X	69/69K	POLY	METAL	-	3P+N+G	4
		DS100	5	100	600	-	4X	69/69K	POLY	METAL	-	3P+N+G	6
		DS200	6	200	600	-	4X	69/69K	-	METAL	-	3P+N+G	6
Multipin		**PN7c**	1	15	480	130	-	66/67*	POLY	METAL	SS	6P+G	-
		PN12c	1	15	480	480	4X*	66/67*	POLY	METAL	SS	11P+G	-
		DSN12c	1	15	480	480	4X	69	POLY	-		11P+G	
		DSN24c	2	10	480	480	4X	69	POLY	-	-	23P+G	-
		DS24c	2	10	250	250	3R	54/55	-	-	SS	23P+G	-
		**DSN37c**	3	8	480	480	4X	69	POLY	-	-	36P+G	-
		DS37c	3	8	480	480	3R	54/55	-	-	SS	36P+G	-
		DN9c	3	20	480	130	-	54/55	-	METAL	-	8P+G	-
		DN20c	5	20	480	130	-	54/55	-	METAL	-	19P+G	-
		**DS7c**	4	30	600	130	4X	69/69K	POLY	METAL	-	6P+G	3
		DR7c	4	50	600	130	4X	69/69K	POLY	METAL	-	6P+G	3

* The indicated ratings do not apply to devices with SS casings.
\+ Type 4X optional
** DSN20 auxiliary contacts just provide a continuity loop thru the receptacle to indicate that a plug is connected.

...AND SELECTION GUIDE

Model	Current Interruption Rating*	Horsepower Ratings (see catalog section for other voltages)			Main Contacts Wire Size Capacity		Terminal Type
		240 V - 3Ø	480 V - 3Ø	600 V - 3Ø	Min	Max	
DSN20	SWITCH-RATED	3 hp	7.5 hp	7.5 hp	14 AWG	12 AWG	SCREW TERMINAL
DSN30	SWITCH-RATED	5 hp	15 hp	15 hp	14 AWG	8 AWG	SCREW TERMINAL
DSN60	SWITCH-RATED	7.5 hp	20 hp	20 hp	14 AWG	4 AWG	SCREW TERMINAL
DSN100	SWITCH-RATED	20 hp	50 hp	50 hp	10 AWG	2 AWG	SCREW TERMINAL
DSN150	SWITCH-RATED	30 hp	75 hp	75 hp	4 AWG	2/0 AWG	SCREW TERMINAL
DS20	SWITCH-RATED	5 hp	7.5 hp	10 hp	14 AWG	8 AWG	SCREW TERMINAL
DS30	SWITCH-RATED	5 hp	15 hp	15 hp	14 AWG	4 AWG	SCREW TERMINAL
DS60	SWITCH-RATED	10 hp	25 hp	25 hp	10 AWG	2 AWG	SCREW TERMINAL
DS100	SWITCH-RATED	10 hp	30 hp	-	4 AWG	2/0 AWG	SCREW TERMINAL
DS200	SWITCH-RATED	40 hp	100 hp	100 hp	4 AWG	4/0 AWG	SCREW TERMINAL
PN7c	CURRENT INTERRUPTING	-	-	-	18 AWG	10 AWG	SCREW TERMINAL
PN12c	NON-CURRENT INTERRUPTING	-	-	-	18 AWG	14 AWG	SOLDER/CRIMP TERMINAL
DSN12c	NON-CURRENT INTERRUPTING	-	-	-	18 AWG	14 AWG	SOLDER/CRIMP TERMINAL
DSN24c	NON-CURRENT INTERRUPTING	-	-	-	18 AWG	14 AWG	SOLDER/CRIMP TERMINAL
DS24c	NON-CURRENT INTERRUPTING	-	-	-	18 AWG	14 AWG	SOLDER/CRIMP TERMINAL
DSN37c	NON-CURRENT INTERRUPTING	-	-	-	18 AWG	14 AWG	SOLDER/CRIMP TERMINAL
DS37c	NON-CURRENT INTERRUPTING	-	-	-	18 AWG	14 AWG	SOLDER/CRIMP TERMINAL
DN9c	CURRENT INTERRUPTING	3 hp	5 hp	-	16 AWG	10 AWG	SCREW TERMINAL
DN20c	CURRENT INTERRUPTING	1 hp	3 hp	-	16 AWG	10 AWG	SCREW TERMINAL
DS7c	SWITCH-RATED (POLY only)	-	-	-	14 AWG	8 AWG	SCREW TERMINAL
DR7c	NON-CURRENT INTERRUPTING	-	-	-	14 AWG	8 AWG	SCREW TERMINAL

* 'Switch-Rated' and 'Current Interrupting' ratings apply to alternating current only.

MELTRIC PRODUCT SUMMARY...

	Model	Size	Amp (A) Rating	Maximum Voltage Rating		Environmental Ratings		Available Casing Materials			Maximum Number of Contacts	
				VAC	VDC	Type	IP	Poly	Metal	SS	Main	Aux.
Standard	DR30	2	30	600	-	3R+		POLY	-	-	3P+N+G	2
	DR50	3	50	600	-	3R+		POLY	-	-	3P+N+G	4
	DR100	4	100	600	-	4X	69/69K	POLY	METAL	-	3P+N+G	4
	DR150	5	150	600	-	4X	69/69K	POLY	METAL	-	3P+N+G	6
	DR250	6	250	600	-	4X	69/69K	-	METAL	-	3P+N+G	6
	PN20	1	20	480*	-	4X	-	POLY	METAL	SS+*	3P+N+G	-
	PNHT	1	30	480	130	-	44	-	METAL	-	3P+N+G	-
Direct Current	DSDC1	2	20	-	250	3R+	-	POLY	-	-	2P+G	-
	DSDC1	2	15	-	600	3R+	-	POLY	-	-	2P+G	-
	DSDC1	2	10	-	750	3R+	-	POLY	-	-	2P+G	-
	DSDC3	3	30	-	250	3R+	-	POLY	-	-	2P+G	-
	DSDC3	3	30	-	600	3R+	-	POLY	-	-	2P+G	-
	DSDC3	3	20	-	750	3R+	-	POLY	-	-	2P+G	-
	DSDC6	4	60	-	250	4X	69/69K	POLY	METAL	-	2P+G	-
	DSDC6	4	50	-	600	4X	69/69K	POLY	METAL	-	2P+G	-
	DSDC6	4	30	-	750	4X	69/69K	POLY	METAL	-	2P+G	-
	DSDC9	5	100	-	250	4X	69/69K	POLY	METAL	-	2P+G	-
	DSDC9	5	60	-	600	4X	69/69K	POLY	-	-	2P+G	-
	DSDC2	6	200	-	250	4X	69/69K	-	METAL	-	2P+G	-
	DSDC2	6	100	-	600	4X	69/69K	-	METAL	-	2P+G	-
High Ampacity	P66	8	660	1,100	1,500	-	66/67	-	METAL		3P+N+G	8
	P66 (LUG)	8	660	1,100	1,500	-	66/67	-	METAL		3P+N+G	8
	PFQ300	C	300	600	250	-	66/67	-	METAL	-	3P+N+G	8
	PF300	C	300	600	250	-	66/67	-	METAL	-	3P+N+G	4
	PF400	F	400	600	250	-	66/67	-	METAL	-	3P+N+G	4
	PF600	F	600	600	250	-	66/67	-	METAL	-	3P+N+G	4
	DR400	7	400	600	-	4X	69/69K	-	METAL	-	3P+G	2
	CS1000	M	400	600	600	-	66/67	POLY	-	-	1P	-
	SP	S	600	600	600	-	66/67	POLY	-	-	1P	2++
	DSP400	4	400	480	-	4X	69/69K	POLY	-	-	1P	2

* 600 VAC available at 15 A and less
+ Type 4X optional
++ SP pilot contacts are provided to energize receptacle only when mated with inlet
+* Indicated environmental ratings do not apply to devices with SS casings

...AND SELECTION GUIDE

Model	Current Interruption Rating*	Horsepower Ratings (see catalog section for other voltages)			Main Contacts Wire Size Capacity		Terminal Type
		240 V - 3Ø	480 V - 3Ø	600 V - 3Ø	Min	Max	
DR30	NON-CURRENT INTERRUPTING	-	-	-	14 AWG	8 AWG	SCREW TERMINAL
DR50	NON-CURRENT INTERRUPTING	-	-	-	14 AWG	4 AWG	SCREW TERMINAL
DR100	NON-CURRENT INTERRUPTING	-	-	-	10 AWG	2 AWG	SCREW TERMINAL
DR150	NON-CURRENT INTERRUPTING	-	-	-	4 AWG	2/0 AWG	SCREW TERMINAL
DR250	NON-CURRENT INTERRUPTING	-	-	-	4 AWG	4/0 AWG	SCREW TERMINAL
PN20	CURRENT INTERRUPTING	-	-	-	14 AWG	8 AWG	SCREW TERMINAL
PNHT	NON-CURRENT INTERRUPTING	-	-	-	14 AWG	8 AWG	SCREW TERMINAL
DSDC1	NON-CURRENT INTERRUPTING	-	-	-	14 AWG	8 AWG	SCREW TERMINAL
DSDC1	NON-CURRENT INTERRUPTING	-	-	-	14 AWG	8 AWG	SCREW TERMINAL
DSDC1	NON-CURRENT INTERRUPTING	-	-	-	14 AWG	8 AWG	SCREW TERMINAL
DSDC3	NON-CURRENT INTERRUPTING	-	-	-	14 AWG	4 AWG	SCREW TERMINAL
DSDC3	NON-CURRENT INTERRUPTING	-	-	-	14 AWG	4 AWG	SCREW TERMINAL
DSDC3	NON-CURRENT INTERRUPTING	-	-	-	14 AWG	4 AWG	SCREW TERMINAL
DSDC6	NON-CURRENT INTERRUPTING	-	-	-	10 AWG	2 AWG	SCREW TERMINAL
DSDC6	NON-CURRENT INTERRUPTING	-	-	-	10 AWG	2 AWG	SCREW TERMINAL
DSDC6	NON-CURRENT INTERRUPTING	-	-	-	10 AWG	2 AWG	SCREW TERMINAL
DSDC9	NON-CURRENT INTERRUPTING	-	-	-	4 AWG	2/0 AWG	SCREW TERMINAL
DSDC9	NON-CURRENT INTERRUPTING	-	-	-	4 AWG	2/0 AWG	SCREW TERMINAL
DSDC2	NON-CURRENT INTERRUPTING	-	-	-	4 AWG	4/0 AWG	SCREW TERMINAL
DSDC2	NON-CURRENT INTERRUPTING	-	-	-	4 AWG	4/0 AWG	SCREW TERMINAL
P66	NON-CURRENT INTERRUPTING	-	-	-	300 MCM	777 MCM	SCREW TERMINAL
P66 (LUG)	NON-CURRENT INTERRUPTING	-	-	-	4/0[1] AWG	600 MCM	LUG TERMINAL
PFQ300	NON-CURRENT INTERRUPTING	-	-	-	2 AWG	750 MCM	LUG TERMINAL
PF300	NON-CURRENT INTERRUPTING	-	-	-	2 AWG	750 MCM	LUG TERMINAL
PF400	NON-CURRENT INTERRUPTING	-	-	-	2 AWG	750 MCM	LUG TERMINAL
PF600	NON-CURRENT INTERRUPTING	-	-	-	2 AWG	750 MCM	LUG TERMINAL
DR400	NON-CURRENT INTERRUPTING	-	-	-	2 AWG	500 MCM	SCREW TERMINAL
CS1000	NON-CURRENT INTERRUPTING	-	-	-	1/0 AWG	600 MCM	LUG TERMINAL
SP	NON-CURRENT INTERRUPTING	-	500 hp	500 hp	2/0 AWG	777 MCM	LUG TERMINAL
DSP400	NON-CURRENT INTERRUPTING	-	-	-	1/0 AWG	600 MCM	LUG TERMINAL

* 'Switch-Rated' and 'Current Interrupting' ratings apply to alternating current only.
1 With Reducer

MELTRIC PRODUCT SUMMARY...

Hazardous Location













Model	Size	Amp (A) Rating	Maximum Voltage Rating		Environmental Ratings		Available Casing Materials			Maximum Number of Contacts	
			VAC	VDC	Type	IP	Poly	Metal	SS	Main	Aux.
DXN20	1	20	600	-	-	66/67	POLY	-	-	3P+N+G	-
DXN30	2	30	600	-	-	66/67	POLY	-	-	3P+N+G	2
DXN60	3	60	600	-	-	66/67	POLY	-	-	3P+N+G	2
DXA1		20	600	-	-	66/67	-	METAL	-	3P+N+G	-
DS20	2	20	600	-	4X	-	POLY	-	-	3P+N+G	2
DS30	3	30	600	-	4X	-	POLY	-	-	3P+N+G	4
DS60	4	60	600	-	4X	-	-	METAL	-	3P+N+G	4
DS100C	4	100	600	-	4X	-	POLY	METAL	-	3P+N+G	4
DSN150	5	150	600	-	4X	-	-	METAL	-	3P+N+G	6
DS200	6	200	600	-	4X	-	-	METAL	-	3P+G	6
DR30	2	30	600	-	4X	-	POLY	-	-	3P+N+G	2
DR50	3	50	600	-	4X	-	POLY	-	-	3P+N+G	4
DR250	6	250	600	-	4X	-	-	METAL	-	3P+G	6
DSDC1	2	20	-	250	4X	-	POLY	-	-	2P+G	-
DSDC3	3	30	-	250	4X	-	POLY	-	-	2P+G	-
DSDC6	4	60	-	250	4X	-	POLY	METAL	-	2P+G	-
DSDC9	5	100	-	250	4X	-	-	METAL	-	2P+G	-
DSDC2	6	200	-	250	4X	-	-	METAL	-	2P+G	-
DX1	8	20	750	-	-	65	-	METAL	-	3P+N+G	-
DX3	8	32	750	-	-	65	-	METAL	-	3P+N+G	-
DX6	9	63	750	-	-	65/66	-	METAL	-	3P+N+G	-
DX9	9	125	750	-	-	65/66	-	METAL	-	3P+N+G	-
PNCX	P	5	250			66/67/69	POLY	-		4P +G	-
PXN12c	1	10	220	-	-	65/66	-	METAL	-	11P+G	-
DXN25c	3	10	440	-	-	66/67	-	METAL	-	24P+G	-
DXN37c	3	10	230	-	-	66/67	-	METAL	-	36P+G	-
SPeX	S	600 A	1000	-	-	65/66	POLY	-	-	1P	2*

* SPeX pilot contacts are provided to energize receptacle only when mated with inlet

...AND SELECTION GUIDE

Model	Current Interruption Rating	Horsepower Ratings (see catalog section for other voltages)			Main Contacts Wire Size Capacity		Terminal Type
		240 V - 3Ø	480 V - 3Ø	600 V - 3Ø	Min	Max	
DXN20	CURRENT INTERRUPTING	2 hp	7.5 hp	7.5 hp	16 AWG	10 AWG	SCREW TERMINAL
DXN30	CURRENT INTERRUPTING	5 hp	10 hp	15 hp	14 AWG	6 AWG	SCREW TERMINAL
DXN60	CURRENT INTERRUPTING	7.5 hp	20 hp	20 hp	10 AWG	4 AWG	SCREW TERMINAL
DXA1	CURRENT INTERRUPTING	2 hp	7.5 hp	7.5 hp	16 AWG	10 AWG	SCREW TERMINAL
DS20	NON-CURRENT INTERRUPTING	5 hp	7.5 hp	10 hp	14 AWG	8 AWG	SCREW TERMINAL
DS30	NON-CURRENT INTERRUPTING	5 hp	15 hp	15 hp	14 AWG	4 AWG	SCREW TERMINAL
DS60	NON-CURRENT INTERRUPTING	10 hp	25 hp	25 hp	10 AWG	2 AWG	SCREW TERMINAL
DS100C	NON-CURRENT INTERRUPTING	20 hp	50 hp	50 hp	10 AWG	2 AWG	SCREW TERMINAL
DSN150	NON-CURRENT INTERRUPTING	30 hp	75 hp	75 hp	4 AWG	2/0 AWG	SCREW TERMINAL
DS200	NON-CURRENT INTERRUPTING	40 hp	100 hp	100 hp	4 AWG	4/0 AWG	SCREW TERMINAL
DR30	NON-CURRENT INTERRUPTING	-	-	-	14 AWG	8 AWG	SCREW TERMINAL
DR50	NON-CURRENT INTERRUPTING	-	-	-	14 AWG	4 AWG	SCREW TERMINAL
DR250	NON-CURRENT INTERRUPTING	-	-	-	4 AWG	4/0 AWG	SCREW TERMINAL
DSDC1	NON-CURRENT INTERRUPTING	-	-	-	14 AWG	8 AWG	SCREW TERMINAL
DSDC3	NON-CURRENT INTERRUPTING	-	-	-	14 AWG	4 AWG	SCREW TERMINAL
DSDC6	NON-CURRENT INTERRUPTING	-	-	-	10 AWG	2 AWG	SCREW TERMINAL
DSDC9	NON-CURRENT INTERRUPTING	-	-	-	4 AWG	2/0 AWG	SCREW TERMINAL
DSDC2	NON-CURRENT INTERRUPTING	-	-	-	4 AWG	4/0 AWG	SCREW TERMINAL
DX1	CURRENT INTERRUPTING	-	-	-	14 AWG	8 AWG	SCREW TERMINAL
DX3	CURRENT INTERRUPTING	-	-	-	14 AWG	8 AWG	SCREW TERMINAL
DX6	CURRENT INTERRUPTING	-	-	-	6 AWG	1/0 AWG	SCREW TERMINAL
DX9	CURRENT INTERRUPTING	-	-	-	2 AWG	2/0 AWG	SCREW TERMINAL
PNCX	NON-CURRENT INTERRUPTING	-	-	-	18 AWG	12 AWG	SCREW
PXN12c	NON-CURRENT INTERRUPTING	-	-	-	16 AWG	14 AWG	SOLDER/CRIMP TERMINAL
DXN25c	NON-CURRENT INTERRUPTING	-	-	-	18 AWG	14 AWG	SOLDER/CRIMP TERMINAL
DXN37c	NON-CURRENT INTERRUPTING	-	-	-	18 AWG	14 AWG	SOLDER/CRIMP TERMINAL
SPeX	NON-CURRENT INTERRUPTING	-	-	-	2/0 AWG	750 MCM	LUG



SWITCH-RATED
Plugs & Receptacles

WATCH ME >>

The MELTRIC Switch-Rated product line features DECONTACTOR™ technology devices rated from 20 to 200 A with 3-phase horsepower ratings from 0.75 to 100 hp. An integral switch mechanism enables workers to safely connect and disconnect motors, welding machines and other industrial equipment at the touch of a button. DSN and DS devices are ideal for pumps, motors, conveyors and cord drops in industrial settings such as data centers, food and beverage, water treatment, welding, and HVAC.



DSN COMPACT SIZE WITH IP69K WATERTIGHTNESS P. 25

- 20 A to 150 A (up to 75 hp)
- Poly or metal casings (100 A and above for metal)
- Automatic Type 4X/IP69/IP69K watertightness

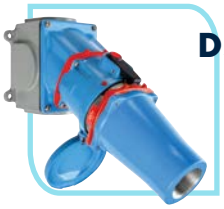

DS LARGER WIRING AND AMPERAGE CAPACITY P. 41

- 20 A to 200 A, (up to 100 hp)
- Poly or metal casings (60 A and above for metal)
- Type 3R or 4X/IP69/IP69K
- Larger conductor capacities



DSN
Switch-Rated

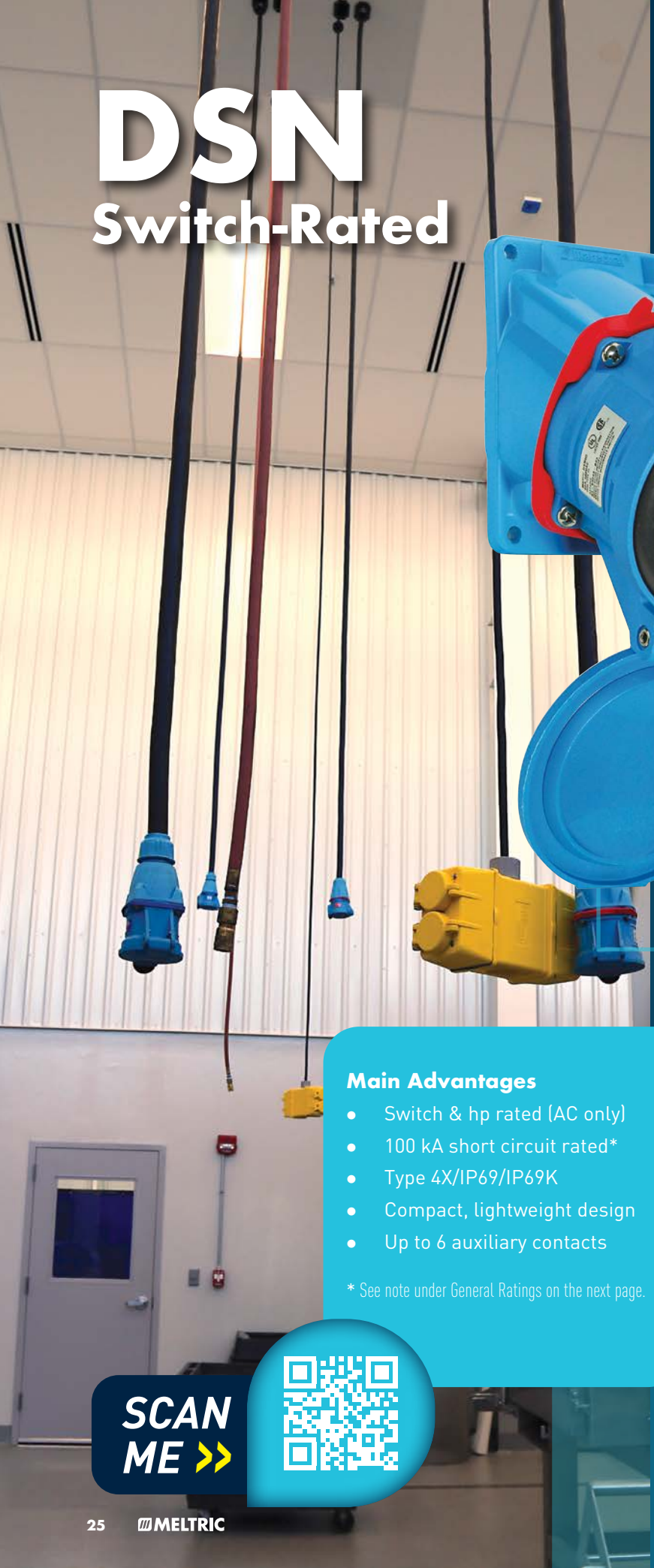





Main Advantages

- Switch & hp rated (AC only)
- 100 kA short circuit rated*
- Type 4X/IP69/IP69K
- Compact, lightweight design
- Up to 6 auxiliary contacts

* See note under General Ratings on the next page.

SCAN ME >>

- Features and Ratings p. 26
- DSN20 p. 27
- DSN30 p. 29
- DSN60 p. 31
- DSN100 p. 33
- DSN150 p. 35
- Spare Parts p. 37
- Dimensions p. 39

PRODUCT FEATURES

DECONTACTOR™ Technology

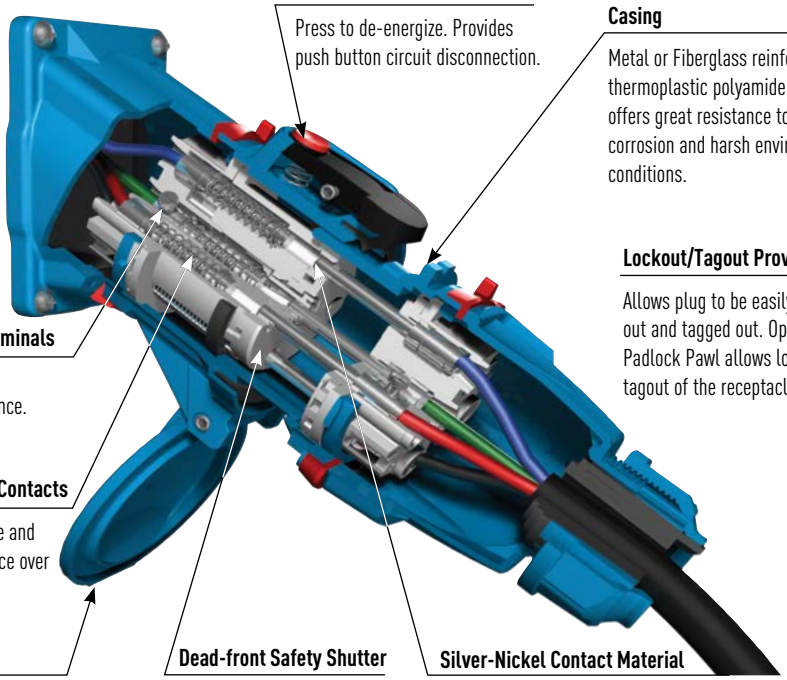

OFF Button

Press to de-energize. Provides push button circuit disconnection.

Casing

Metal or Fiberglass reinforced thermoplastic polyamide material offers great resistance to impact, corrosion and harsh environmental conditions.

Lockout/Tagout Provisions

Allows plug to be easily locked out and tagged out. Optional Padlock Pawl allows lockout/ tagout of the receptacle.

Spring Assisted Screw Terminals

Patented design ensures "Tighten and Forget" confidence.

Spring-Loaded Butt-Style Contacts

Ensures optimal contact force and superior electrical performance over thousands of operations.

Lid

Provides 4X/IP69/IP69K for additional protection in harsh environments.

Dead-front Safety Shutter

Ensures safety by preventing user access to live parts.

Silver-Nickel Contact Material

Solid silver-nickel contact surfaces provide superior conductivity, durability and corrosion resistance.

General Ratings

Amperage	20 to 150 A
Voltage	600 VAC Max
Frequency	50-400 Hz
Horsepower	.75 to 75 hp
Short-Circuit (Withstand & Close)	100 kA*
Environmental	Type 4X/IP69/IP69K
Temperature	Min -40°F/Max 140°F

* DSN20, 30, 60 and 100: Testing was performed with RK1 current limiting fuses sized at 400% or more of the highest full load motor ampacity associated with the devices horsepower ratings.

* DSN 150: 100 kA testing was performed with 225 A RK1 non-time delay Mersen fuses. 10 kA testing was performed with 400 A RK1 non-time delay Mersen fuses.

Highlighted Feature

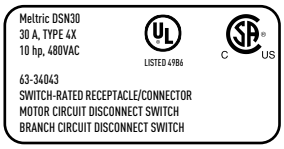

MELTRIC DSN Series Switch-Rated devices are UL & CSA rated for motor circuit and branch circuit disconnect switching – up to 75 hp and up to 150 A.

Listings

Category	UL	CSA	IEC	NOM
Plugs and Receptacles	UL 1682	C22.2 No. 182.1	60309-1	NOM-003-SCFI-2014
Branch Circuit Disconnect Switching (AC only)	UL Subject 2682 (Performance tests from UL 98)	UL Subject 2682	60947-3, AC22, AC23	
Motor Circuit Disconnect Switching (AC only)	UL Subject 2682 (Performance tests from UL 98)	UL Subject 2682	60947-3, AC22, AC23	

Operating Instructions



When the plug and receptacle are latched together the circuit is connected.



Pressing the pawl breaks the connection and opens the circuit. The plug is ejected to its rest position; the contacts are now de-energized.



Rotating the de-energized plug 30˚ counterclockwise closes the safety shutter and frees the plug to be withdrawn from the receptacle.



The plug and the receptacle are separated. The safety shutter prevents access to live parts.

5 To reconnect, align red dots, insert plug into receptacle, rotate 30° clockwise, and apply insertion force.

DSN20 Switch-Rated - 20 A

UL/CSA Ratings

- **Max Amperage & Voltage**
  20 A, 600 VAC
- **Switch-Rating (AC Only)**
  Branch Circuit & Motor Circuit Disconnect Switching
- **Horsepower Ratings**

120 V	1Ø	.75 hp
240 V	1Ø	2 hp
208 V	3Ø	3 hp
240 V	3Ø	3 hp
480 V	3Ø	7.5 hp
600 V	3Ø	7.5 hp

- **Short Circuit Rating**
  100 kA Close & Withstand
  Testing was performed with 35 A RK1 fast-acting Mersen fuses.
  10 kA Close & Withstand
  Testing was performed with 80 A RK1 fast-acting Mersen fuses.
- **Environmental Ratings**
  Type 4X/IP66/IP67/IP69/IP69K
- **Temperature Range**
  Min -40°F/Max 140°F
  See pg 260 for temperatures outside of this range.
- **Wiring Capacity**
  Based on THHN wire sizes
  Min 14 AWG Max 12 AWG
  Aux Contacts: Prewired 18 AWG
- **Certifications**
  UL 2682, UL 1682,
  CSA C22.2 NO. 182.1, NOM

Receptacle (female)



Inlet (male)



! Remember to add installation accessories to your order

North American UL/CSA Configurations

VOLTAGE	POLARITY	PART # POLY	PART # POLY
120 V	1P+N+G	63-14125-K16•	63-18125-K16•
120 208 V	3P+N+G	63-14127-K16•	63-18127-K16•
125 V	1P+N+G	63-14075	63-18075
125 250 V	2P+N+G	63-14076	63-18076
208 V	2P+G	63-14122-K16•	63-18122-K16•
208 V	3P+G	63-14123-K16•	63-18123-K16•
250 V	2P+G	63-14072	63-18072
250 V	3P+G	63-14073	63-18073
277 V	1P+N+G	63-14045	63-18045
277 480 V	3P+N+G	63-14047	63-18047
347 600 V	3P+N+G	63-14147	63-18147
480 V	2P+G	63-14042	63-18042
480 V	3P+G	63-14043	63-18043
600 V	2P+G	63-14142	63-18142
600 V	3P+G	63-14143	63-18143

For international configurations and ratings (IEC,CE) visit meltric.com/international-catalog or contact Customer Service at 800-433-7642.

Main Options



Mushroom Pawl



Padlock Pawl



Self-Returning Lid
Recommended for cord applications to keep lid tucked in to avoid damage.

RECEPTACLE OPTIONS	SUFFIX #
With Shunt Contact	**Recept # -972**[1]
Straight Insertion	**Recept # -352**[2]
Self-Ejecting Connector Release**	**Recept # -354**[2]
Mushroom Pawl	**Recept # -375**
Padlock Pawl	**Recept # -843**
Metal Pawl	**Recept # -824**
Self-Returning Lid (Manual Close)	**Recept # -NC**

INLET OPTIONS	SUFFIX #
Self-Ejecting Plug Release**	**Inlet # -338**
Without Lockout Hole	**Inlet # -A155**

• Notice: Product has changed and will not mate with prior 63-1416x and 63-1816x 120 V and 208 V configurations. Please contact customer service if product will be used with devices purchased prior to January 31, 2021.

Notes: [1] Unlike other DSN & DS products, the DSN20 pilots are only on the receptacle side and create a continuity loop that is completed when a plug is connected to the receptacle.

** For self-ejecting connectors and plugs, a 443 suffix must be added to the handle part number. See pages 239-240 for more information.
[2] This option includes the Self-Returning Lid.

! See pages 237-246 for detailed information on these options

Order Example: 480 V DSN20 with padlock pawl
DSN20 Receptacle 3P+G = 63-14043-***843***

Handle Option Guide pgs 243-244

INSTALLATION ACCESSORIES – SIZE 1

When properly installed, all accessories meet or exceed the environmental ratings of the devices they are mounted to; unless otherwise noted.

HANDLES

HANDLE WITH NPT		PART # POLY	PART # METAL
 Poly / Metal	1/2"	511P0N05	791P0N05L
	3/4"	511P0N07	791P0N07L
	1"	511P0N10	791P0N10L

For available cord grips, see pg 231.

POLY HANDLE WITH CORD GRIP	CABLE RANGE	PART #
	.350-.520"	711P0BP6
	.520-.680"	711P0CP5
	.680-.980"	711P0DP4

METAL HANDLE WITH CORD GRIP		
	.438-.500"	791P0BS3L
	.500-.562"	791P0BS4L
	.562-.625"	791P0CS1L
	.625-.750"	791P0CS4L

POLY HANDLE		
	.350-.700"	511P0D18

POLY EXTENDED HANDLE		
	.200-.820"	511P0D21

POLY ANGLED HANDLE		
	.354-.708"	511P6D18

BOXES

POLY CONDUIT ENTRY WITH NPT			
 * 6.7 in³	30°	1/2"	511B3N05
	30°	3/4"	511B3N07

* Interior volume with receptacle installed.

POLY WALL BOX WITH ANGLE			
 * 82.0 in³	70°		511C7000
		Ground Bar	51AA089

70° poly boxes are not drilled.

* Interior volume with receptacle installed.

POLY ANGLE WITH METAL BOX WITH NPT			
 * 74.6 in³	70°	1/2"	711C7N05
	70°	3/4"	711C7N07
	70°	1"	711C7N10
	70°	1 1/4"	711C7N12
	70°	1 1/2"	711C7N15

* Interior volume with receptacle installed.

METAL BOX WITH NPT			
	0°	1/2"	7T1F0N05
	0°	3/4"	7T1F0N07
	0°	1"	7T1F0N10
	0°	1 1/4"	7T1F0N12

POLY ANGLE WITH METAL BOX WITH NPT			
 * 29.8 in³	30°	1/2"	711C3N05
	30°	3/4"	711C3N07
	30°	1"	711C3N10
	30°	1 1/4"	711C3N12

* Interior volume with receptacle installed.

NPT on top or bottom (if rotated). For other configurations, contact Customer Service.

ANGLES

POLY ANGLE			
	30°	511M3	
	70°	511M7	Panel mounting only.

METAL ANGLE			
	0°	591M0	
	FS/FD 30°	791M3FS	Base measures approximately 4.2" x 2.7". Due to the variation in sizes of FS boxes, please verify that your FS box matches our dimensions, if not call Customer Service for other solutions.
	45°	591M4	

MISCELLANEOUS ACCESSORIES

FINGER DRAWPLATES		
	61-1A346	Set of Two (2) Recommended for cord to cord assembly applications, for facilitated mating.

PROTECTIVE INLET/PLUG CAP		
	61-1A426	For Inlets/Plugs Only.

PADLOCKABLE INLET/PLUG CAP		
	61-1A826	For Inlets/Plugs Only.

SCREWDRIVER FOR TERMINAL SCREWS		
	SD18	Klein 608-3 1/8" cabinet with 3" round shank.

EASY RETROFIT ADAPTER PLATES		
	see pg 246	Mount to existing boxes.

RECEPTACLE LOCKING PIN		
	LP-843	Requires Padlockable Pawl option (-843) on receptacle.

DSN30 Switch-Rated - 30 A

UL/CSA Ratings

- **Max Amperage & Voltage**
  30 A, 600 VAC
- **Switch-Rating (AC Only)**
  Branch Circuit & Motor Circuit Disconnect Switching
- **Horsepower Ratings**

120 V	1Ø	2 hp
240 V	1Ø	3 hp
208 V	3Ø	5 hp
240 V	3Ø	5 hp
480 V	3Ø	15 hp
600 V	3Ø	15 hp

- **Short Circuit Rating**
  100 kA Close & Withstand
  Testing was performed with 125 A RK1 fast-acting Mersen fuses.
- **Environmental Ratings**
  Type 4X/IP66/IP67/IP69/IP69K
- **Temperature Range**
  Min -40°F/Max 140°F
  See pg 260 for temperatures outside of this range.
- **Wiring Capacity**
  Based on THHN wire sizes
  Min 14 AWG Max 8 AWG
  Aux Contacts: 14 AWG
- **Certifications**
  UL 2682, UL 1682,
  CSA C22.2 NO. 182.1, NOM

Receptacle (female)



Inlet (male)



! Remember to add installation accessories to your order

North American UL/CSA Configurations

VOLTAGE	POLARITY	PART # POLY	PART # POLY
120 V	1P+N+G	63-34165	63-38165
120 208 V	3P+N+G	63-34167	63-38167
125 V	1P+N+G	63-34075	63-38075
125 250 V	2P+N+G	63-34076	63-38076
208 V	2P+G	63-34162	63-38162
208 V	3P+G	63-34163	63-38163
250 V	2P+G	63-34072	63-38072
250 V	3P+G	63-34073	63-38073
277 V	1P+N+G	63-34045	63-38045
277 480 V	3P+N+G	63-34047	63-38047
347 600 V	3P+N+G	63-34147	63-38147
480 V	2P+G	63-34042	63-38042
480 V	3P+G	63-34043	63-38043
600 V	2P+G	63-34142	63-38142
600 V	3P+G	63-34143	63-38143

For international configurations and ratings (IEC,CE) visit meltric.com/international-catalog or contact Customer Service at 800-433-7642.

Main Options



Auxiliary/Pilot Contacts



Mushroom Pawl



Padlock Pawl



Self-Returning Lid
Recommended for cord applications to keep lid tucked in to avoid damage.

RECEPTACLE OPTIONS	SUFFIX #
With 2 Auxiliary/Pilot Contacts	Recept # -972
Straight Insertion	Recept # -352[2]
Self-Ejecting Connector Release**	Recept # -354[2]
Mushroom Pawl	Recept # -375
Padlock Pawl	Recept # -843
Metal Pawl	Recept # -824
Self-Returning Lid (Manual Close)	Recept # -NC
With Microswitch	Recept # -270[3,4]

INLET OPTIONS	SUFFIX #
With 2 Auxiliary/Pilot Contacts	Inlet # -972
Self-Ejecting Plug Release**	Inlet # -338
Without Lockout Hole	Inlet # -A155
For Microswitch	Inlet # -270[3,4]

Notes:

** For self-ejecting connectors and plugs, a 443 suffix must be added to all handles except the Poly Handle with NPT and Poly Handle with Cord Grip as these handles come with an integrated cable guide. See pages 239-240 for more information.

[2] This option includes the Self-Returning Lid.

[3] Not UL/CSA listed.

[4] Not available on 3P+N+G configurations.

! See pages 237-246 for detailed information on these options

Order Example: 480 V DSN30 + 2 auxiliary contacts
DSN30 Inlet 3P+G = 63-38043-***972***

Handle Option Guide pgs 243-244

INSTALLATION ACCESSORIES – SIZE 2

When properly installed, all accessories meet or exceed the environmental ratings of the devices they are mounted to; unless otherwise noted.

HANDLES

HANDLE WITH NPT		PART # POLY WITH DRAWPLATES	PART # POLY	PART # METAL
NEW Poly with drawplates	1/2"	512P0N05	512P0N05E2615	592P0N05
	3/4"	512P0N07	512P0N07E2615	592P0N07
	1"	512P0N10	512P0N10E2615	592P0N10
Poly	1 1/4"	512P0N12	512P0N12E2615	-
Metal				

For available cord grips, see pg 231.

POLY HANDLE WITH CORD GRIP	CABLE RANGE	PART # WITH DRAWPLATES	PART #
NEW with drawplates	.350-.520"	712P0BP6	712P0BP6E2615
	.520-.680"	712P0CP5	712P0CP5E2615
	.680-.980"	712P0DP4	712P0DP4E2615
	.980-1.260"	712P0EP4	712P0EP4E2615

METAL HANDLE WITH CORD GRIP		
.438-.500"	792P0BS3	
.500-.562"	792P0BS4	
.562-.625"	792P0CS2	
.625-.750"	792P0CS4	
.770-.875"	792P0DS1	
.870-1.000"	792P0DS3	

POLY HANDLE		
.200-.820"	512P0D21	

POLY HANDLE WITH CLAMP & BUSHING		
.750-.875"	712P0S14	
.875-1.000"	712P0S16	
1.000-1.125"	712P0S18	
1.125-1.250"	712P0S20	
1.250-1.375"	712P0S22	

ANGLES

POLY ANGLE			
30°	512M3		
70°	512M7	Panel mounting only.	

METAL ANGLE		
0°	592M0	
30°	592M3	
FS/FD 30°	792M3FS	Base measures approximately 4.2" x 2.7". Due to the variation in sizes of FS boxes, please verify that your FS box matches our dimensions, if not call Customer Service for other solutions.

BOXES

POLY CONDUIT ENTRY WITH NPT		PART #	
30°	1/2"	512B3N05	* Interior volume with receptacle installed.
30°	3/4"	512B3N07	

* 8.5 in^3

POLY WALL BOX WITH ANGLE			
70°		512C7000	70° poly boxes are not drilled. * Interior volume with receptacle installed.
Ground Bar		51AA089	

* 82.0 in^3

POLY ANGLE WITH METAL WALL BOX WITH NPT			
70°	1/2"	712C7N05	* Interior volume with receptacle installed.
70°	3/4"	712C7N07	
70°	1"	712C7N10	
70°	1 1/4"	712C7N12	
70°	1 1/2"	712C7N15	

* 74.6in^3

METAL BOX WITH NPT		
0°	1/2"	7T1F0N05
0°	3/4"	7T1F0N07
0°	1"	7T1F0N10
0°	1 1/4"	7T1F0N12

POLY ANGLE WITH METAL BOX WITH NPT			
30°	1/2"	712C3N05	* Interior volume with receptacle installed.
30°	3/4"	712C3N07	
30°	1"	712C3N10	
30°	1 1/4"	712C3N12	

* 28.7 in^3

NPT on top or bottom (if rotated). For other configurations, contact Customer Service.

MISCELLANEOUS ACCESSORIES

FINGER DRAWPLATES		
61-3A346	Set of Two (2) Recommended for all assembly applications, for facilitated mating.	

PROTECTIVE INLET/PLUG CAP		
61-3A426	For Inlets/Plugs Only.	

PADLOCKABLE INLET/PLUG CAP		
61-3A826	For Inlets/Plugs Only.	

SPRING-LOADED PADLOCKABLE INLET/PLUG CAP		
61-3A226	Metal – For Inlets/Plugs Only. In order to achieve max water ingress protection Type 3R/IP55, spring loaded caps should be ordered with inlets equipped with -A155 suffix.	

SCREWDRIVER FOR TERMINAL SCREWS		
SD18	Klein 608-3 1/8" cabinet with 3" round shank.	

RECEPTACLE LOCKING PIN		
LP-843	Requires Padlockable Pawl option (-843) on receptacle.	

DSN60 Switch-Rated - 60 A

UL/CSA RATINGS

- **Max Amperage & Voltage**
  60 A, 600 VAC
- **Switch-Rating (AC Only)**
  Branch Circuit & Motor Circuit Disconnect Switching
- **Horsepower Ratings**

120 V	1Ø	2 hp
240 V	1Ø	3 hp
208 V	3Ø	7.5 hp
240 V	3Ø	7.5 hp
480 V	3Ø	20 hp
600 V	3Ø	20 hp

- **Short Circuit Rating**
  100 kA Close & Withstand
  Testing was performed with 125 A RK1 fast-acting Mersen fuses.
- **Environmental Ratings**
  Type 4X/IP66/IP67/IP69/IP69K
- **Temperature Range**
  Min -40°F/Max 140°F
  See pg 260 for temperatures outside of this range.
- **Wiring Capacity**
  Based on THHN wire sizes
  Min 14 AWG Max 4 AWG
  Aux Contacts: 14 AWG
- **Certifications**
  UL 2682, UL 1682,
  CSA C22.2 NO. 182.1, NOM

Receptacle (female)



Inlet (male)



! Remember to add installation accessories to your order

North American UL/CSA Configurations

VOLTAGE	POLARITY	PART # POLY	PART # POLY
120 V	1P+N+G	63-64165	63-68165
120 208 V	3P+N+G	63-64167	63-68167
125 V	1P+N+G	63-64075	63-68075
125 250 V	2P+N+G	63-64076	63-68076
208 V	2P+G	63-64162	63-68162
208 V	3P+G	63-64163	63-68163
250 V	2P+G	63-64072	63-68072
250 V	3P+G	63-64073	63-68073
277 V	1P+N+G	63-64045	63-68045
277 480 V	3P+N+G	63-64047	63-68047
347 600 V	3P+N+G	63-64147	63-68147
480 V	2P+G	63-64042	63-68042
480 V	3P+G	63-64043	63-68043
600 V	2P+G	63-64142	63-68142
600 V	3P+G	63-64143	63-68143

For international configurations and ratings (IEC,CE) visit meltric.com/international-catalog or contact Customer Service at 800-433-7642.

MAIN OPTIONS



Auxiliary/Pilot Contacts



Mushroom Pawl



Padlock Pawl



Self-Returning Lid
Recommended for cord applications to keep lid tucked in to avoid damage.

RECEPTACLE OPTIONS	SUFFIX #	INLET OPTIONS	SUFFIX #
With 2 Auxiliary/Pilot Contacts	**Recept # -972**	With 2 Auxiliary/Pilot Contacts	**Inlet # -972**
With 3 Auxiliary/Pilot Contacts	**Recept # -973**	With 3 Auxiliary/Pilot Contacts	**Inlet # -973**
With 4 Auxiliary/Pilot Contacts	**Recept # -974**	With 4 Auxiliary/Pilot Contacts	**Inlet # -974**
Straight Insertion	**Recept # -352**[2]	Self-Ejecting Plug Release**	**Inlet # -338**
Self-Ejecting Connector Release**	**Recept # -354**[2]	Without Lockout Hole	**Inlet # -A155**
Mushroom Pawl	**Recept # -375**	For Microswitch	**Inlet # -270**[3,4]
Padlock Pawl	**Recept # -843**		
Metal Pawl	**Recept # -824**		
Self-Returning Lid (Manual Close)	**Recept # -NC**		
With Microswitch	**Recept # -270**[3,4]		

Notes:

** For self-ejecting connectors and plugs, a 443 suffix must be added to the handle part number. See pages 239-240 for more information.

[2] This option includes the Self-Returning Lid.

[3] Not UL/CSA listed.

[4] Not available on 3P+N+G configurations.

! See pages 237-246 for detailed information on these options

Order Example: 480 V DSN60 + 2 auxiliary contacts
DSN60 Inlet 3P+G = 63-68043-***972***

Handle Option Guide pgs 243-244

INSTALLATION ACCESSORIES – SIZE 3

When properly installed, all accessories meet or exceed the environmental ratings of the devices they are mounted to; unless otherwise noted.

HANDLES

HANDLE WITH NPT		PART # POLY	PART # METAL
 Poly	1/2"	513P0N05	593P0N05
	3/4"	513P0N07	593P0N07
 Metal	1"	513P0N10	593P0N10
	1 1/4"	513P0N12	593P0N12

For available cord grips, see pg 231.

POLY HANDLE WITH CORD GRIP	CABLE RANGE	PART #
	.520-.680"	713P0CP5
	.680-.980"	713P0DP4
	.980-1.260"	713P0EP4

METAL HANDLE WITH CORD GRIP		
	.635-.750"	793P0CS4
	.770-.850"	793P0DS1
	.875-1.000"	793P0DS3
	1.000-1.125"	793P0ES2

POLY HANDLE		
	.390-1.180"	513P0D30

POLY HANDLE WITH BUILT IN DRAWPLATES		
	.390-1.180"	513P0D30473

Makes connector closures easier.

POLY HANDLE WITH CLAMP & BUSHING		
	.750-.875"	713P0S14
	.875-1.000"	713P0S16
	1.000-1.125"	713P0S18
	1.125-1.250"	713P0S20
	1.250-1.375"	713P0S22

ANGLES

POLY ANGLE			
	30˚	513M3	
	70˚	513M7	Panel mounting only.

METAL ANGLE			
	0˚	593M0	
	30˚	593M3	
	FS/FD 30˚	793M3FS	Base measures approximately 4.2" x 2.7". Due to the variation in sizes of FS boxes, please verify that your FS box matches our dimensions, if not call Customer Service for other solutions.
	70˚	593M7	

BOXES

POLY CONDUIT ENTRY WITH NPT			PART #	
 * 13.5 in³	30˚	1/2"	513B3N05	* Interior volume with receptacle installed.
	30˚	3/4"	513B3N07	
	30˚	1"	513B3N10	

POLY WALL BOX WITH ANGLE			
 * 179.41 in³	70˚		513C7000
		Ground Bar	51AA089

70° poly boxes are not drilled.

* Interior volume with receptacle installed.

POLY ANGLE WITH METAL BOX WITH NPT			
 * 177.7 in³	70˚	1/2"	713C7N05
	70˚	3/4"	713C7N07
	70˚	1"	713C7N10
	70˚	1 1/4"	713C7N12
	70˚	1 1/2"	713C7N15

* Interior volume with receptacle installed.

METAL BOX WITH NPT		
	0˚	1/2"	7T1F0N05
	0˚	3/4"	7T1F0N07
	0˚	1"	7T1F0N10
	0˚	1 1/4"	7T1F0N12

POLY ANGLE WITH METAL BOX WITH NPT			
 * 29.6 in³	30˚	1/2"	713C3N05
	30˚	3/4"	713C3N07
	30˚	1"	713C3N10
	30˚	1 1/4"	713C3N12

* Interior volume with receptacle installed.

NPT on top or bottom (if rotated). For other configurations, contact Customer Service.

MISCELLANEOUS ACCESSORIES

FINGER DRAWPLATES		
	61-6A346	Set of Two (2) Recommended for cord to cord assembly applications, for facilitated mating.

PROTECTIVE INLET/PLUG CAP		
	61-6A426	For Inlets/Plugs Only.

PADLOCKABLE INLET/PLUG CAP		
	61-6A826	For Inlets/Plugs Only.

SPRING-LOADED PADLOCKABLE INLET/PLUG CAP		
	61-6A226	Metal – For Inlets/Plugs Only. In order to achieve max water ingress protection Type 3R/IP55, spring loaded caps should be ordered with inlets equipped with -A155 suffix.

CORD GRIP WITH OPTIONS		
	see pg 231	

RECEPTACLE LOCKING PIN		
	LP-843	Requires Padlockable Pawl option (-843) on receptacle.

DSN100 Switch-Rated - 100 A

UL/CSA Ratings

- **Max Amperage & Voltage**
  100 A, 600 VAC
- **Switch-Rating (AC Only)**
  Branch Circuit & Motor Circuit Disconnect Switching
- **Horsepower Ratings**

120 V	1Ø	5 hp
240 V	1Ø	10 hp
208 V	3Ø	20 hp
240 V	3Ø	20 hp
480 V	3Ø	50 hp
600 V	3Ø	50 hp

- **Short Circuit Rating**
  100 kA Close & Withstand
  Testing was performed with 250 A RK1 fast-acting Mersen fuses.
- **Environmental Ratings**
  Type 4X/IP66/IP67/IP69/IP69K
- **Temperature Range**
  Min -40°F/Max 140°F
  See pg 260 for temperatures outside of this range.
- **Wiring Capacity**
  Based on THHN wire sizes
  Min 10 AWG Max 2 AWG
  Aux Contacts: Prewired 14 AWG
- **Certifications**
  UL 2682, UL 1682,
  CSA C22.2 NO. 182.1, NOM

Receptacle (female) **Inlet (male)**







Remember to add installation accessories to your order

North American UL/CSA Configurations

NOTE: Poly devices should not be inter-mated with metal devices

VOLTAGE	POLARITY	PART # POLY	PART # METAL	PART # POLY	PART # METAL
120 V	1P+N+G	63-84165	67-84165	63-88165	67-88165
120 208 V	3P+N+G	63-84167	67-84167	63-88167	67-88167
125 V	1P+N+G	63-84075	67-84075	63-88075	67-88075
125 250 V	2P+N+G	63-84076	67-84076	63-88076	67-88076
208 V	2P+G	63-84162	67-84162	63-88162	67-88162
208 V	3P+G	63-84163	67-84163	63-88163	67-88163
250 V	2P+G	63-84072	67-84072	63-88072	67-88072
250 V	3P+G	63-84073	67-84073	63-88073	67-88073
277 V	1P+N+G	63-84045	67-84045	63-88045	67-88045
277 480 V	3P+N+G	63-84047	67-84047	63-88047	67-88047
347 600 V	3P+N+G	63-84147	67-84147	63-88147	67-88147
480 V	2P+G	63-84042	67-84042	63-88042	67-88042
480 V	3P+G	63-84043	67-84043	63-88043	67-88043
600 V	2P+G	63-84142	67-84142	63-88142	67-88142
600 V	3P+G	63-84143	67-84143	63-88143	67-88143

For international configurations and ratings (IEC,CE) visit meltric.com/international-catalog or contact Customer Service at 800-433-7642.

Main Options



Auxiliary/Pilot Contacts



Mushroom Pawl



Padlock Pawl



Self-Returning Lid
Recommended for cord applications to keep lid tucked in to avoid damage.

See pages 237-246 for detailed information on these options

RECEPTACLE OPTIONS	SUFFIX #	INLET OPTIONS	SUFFIX #
With 2 Auxiliary/Pilot Contacts	Recept # -972	With 2 Auxiliary/Pilot Contacts	Inlet # -972
With 3 Auxiliary/Pilot Contacts	Recept # -263	With 3 Auxiliary/Pilot Contacts	Inlet # -263
With 4 Auxiliary/Pilot Contacts	Recept # -264	With 4 Auxiliary/Pilot Contacts	Inlet # -264
Straight Insertion	Recept # -352[2]	Self-Ejecting Plug Release**	Inlet # -338
Self-Ejecting Connector Release**	Recept # -354[2]	Without Lockout Hole	Inlet # A155
Mushroom Pawl	Recept # -375	For Microswitch	Inlet # -270[3,4]
Padlock Pawl	Recept # -843		
Screw-Type Locking Pawl	Recept # -845		
Metal Pawl (on Poly Receptacle)	Recept # -824		
Self-Returning Lid (Manual Close)	Recept # -NC		
With Microswitch	Recept # -270[3,4]		

Notes:

** For self-ejecting connectors and plugs, a 443 suffix must be added to the handle part number. See pages 239-240 for more information.

[2] This option includes the Self-Returning Lid.

[3] Not UL/CSA listed.

[4] Not available on 3P+N+G configurations.

Order Example: 480 V DSN100 + 2 auxiliary contacts
DSN100 Poly inlet 3P+G = 63-88043-***972***

Handle Option Guide pgs 243-244

INSTALLATION ACCESSORIES – SIZE 4

When properly installed, all accessories meet or exceed the environmental ratings of the devices they are mounted to; unless otherwise noted.

HANDLES

HANDLE WITH NPT		PART # POLY	PART # METAL
 Poly / Metal	1/2"	514P0N05	594P0N05
	3/4"	514P0N07	594P0N07
	1"	514P0N10	594P0N10
	1 1/4"	514P0N12	594P0N12
	1 1/2"	514P0N15	594P0N15

For available cord grips, see pg 231.

POLY HANDLE WITH CORD GRIP	CABLE RANGE	PART #
	.680-.980"	714P0DP4
	.980-1.260"	714P0EP4
	1.260-1.560"	714P0FP1

METAL HANDLE WITH CORD GRIP		
	.750-.875"	794P0DS1
	.875-1.000"	794P0DS3
	1.000-1.125"	794P0ES2
	1.125-1.250"	794P0FS0
	1.250-1.375"	794P0FS1
	1.375-1.438"	794P0FS4
	1.438-1.562"	794P0FS2*
	1.562-1.688"	794P0FS3*

*May require stripping of cable jacket.

POLY HANDLE		
	.511-1.377"	514P0D35

POLY HANDLE WITH BUILT IN DRAWPLATES		
	.511-1.377"	514P0D35473

Makes connector closures easier.

SANTOPRENE HANDLE		
	.551-.787"	554P0D20L
	.708-.984"	554P0D25L
	.984-1.377"	554P0D35L
	1.377-1.771"	554P0D45L
	1.771-1.929"	554P0D49L

ANGLES

POLY ANGLE					
	30°	514M3		70°	514M7 Panel mounting only.

METAL ANGLE			
	0°	594M0	
	30°	594M3	
	30°	794M3L	
	30° Oversized	794M3	Mounts on oversize box only. Order with 7T5F0Nxx. See pg 50.
	70°	594M7	

BOXES

POLY CONDUIT ENTRY WITH NPT			PART #	
 * 27.7 in³	30°	1/2"	514B3N05	For poly devices only
	30°	3/4"	514B3N07	
	30°	1"	514B3N10	* Interior volume with receptacle installed.
	30°	1 1/4"	514B3N12	

POLY WALL BOX WITH ANGLE			
 * 181.24 in³	70°	514C7000	70° poly boxes are not drilled. * Interior volume with receptacle installed.
	Ground Bar	51AA089	

POLY ANGLE WITH METAL BOX WITH NPT			
 * 177.7 in³	70°	1/2"	714C7N05
	70°	3/4"	714C7N07
	70°	1"	714C7N10
	70°	1 1/4"	714C7N12
	70°	1 1/2"	714C7N15

* Interior volume with receptacle installed.

METAL BOX WITH NPT		
	0°	1"	7T4F0N10
	0°	1 1/4"	7T4F0N12
	0°	1 1/2"	7T4F0N15
	0°	2"	7T4F0N20

POLY ANGLE WITH METAL BOX WITH NPT			
 * 61.0 in³ Poly Angle * 59.4 in³ Metal Angle	30°	1"	714C3N10
	30°	1 1/4"	714C3N12
	30°	1 1/2"	714C3N15
	30°	2"	714C3N20

For metal angle, replace "71" prefix with "79". * Interior volume with receptacle installed.

MISCELLANEOUS ACCESSORIES

FINGER DRAWPLATES		
	31-6A346	Set of Two (2) Recommended for cord to cord assembly applications, for facilitated mating.

PROTECTIVE INLET/PLUG CAP		
	31-6A426	For Inlets/Plugs Only.

PADLOCKABLE INLET/PLUG CAP		
	DS6PC	Poly – For Inlets/Plugs Only.
	DS6MC	Aluminum – For Inlets/Plugs Only. -A155 suffix required on inlet part # to retain water ingress protection.

SPRING-LOADED PADLOCKABLE INLET/PLUG CAP			
	31-6A226	For Poly Inlets/Plugs Only.	In order to achieve max water ingress protection Type 3R/ IP55, spring loaded caps should be ordered with inlets equipped with -A155 suffix.
	39-6A226	For Metal Inlets/Plugs Only.	

RECEPTACLE LOCKING PIN		
	LP-843	Requires Padlockable Pawl option (-843) on receptacle.

DSN150 Switch-Rated - 150 A

UL/CSA Ratings

- **Max Amperage & Voltage**
  150 A, 600 VAC
- **Switch-Rating (AC Only)**
  Branch Circuit & Motor Circuit Disconnect Switching
- **Horsepower Ratings**

120 V	1Ø	7.5 hp
240 V	1Ø	20 hp
208 V	3Ø	30 hp
240 V	3Ø	30 hp
480 V	3Ø	75 hp
600 V	3Ø	75 hp

- **Short Circuit Rating**
  100 kA Close & Withstand
  Testing was performed with 225 A RK1 fast-acting Mersen fuses.
  10 kA Close & Withstand
  Testing was performed with 400 A RK1 fast-acting Mersen fuses.
- **Environmental Ratings**
  Type 4X/IP66/IP67/IP69/IP69K
- **Temperature Range**
  Min -40°F/Max 140°F
  See pg 260 for temperatures outside of this range.
- **Wiring Capacity**
  Based on THHN wire sizes
  Min 4 AWG Max 2/0 AWG
  Aux Contacts: Prewired 14 AWG
- **Certifications**
  UL 2682, UL 1682,
  CSA C22.2 NO. 182.1, NOM

Receptacle (female)



Inlet (male)

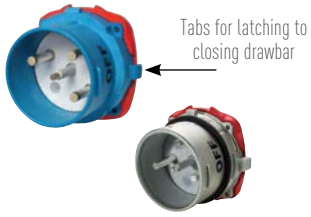

! Remember to add installation accessories to your order

North American UL/CSA Configurations

NOTE: Poly devices should not be inter-mated with metal devices

VOLTAGE	POLARITY	PART # POLY	PART # METAL	PART # POLY	PART # METAL
120 V	1P+N+G	63-94165	67-94165	63-98165	67-98165
120 208 V	3P+N+G	63-94167	67-94167	63-98167	67-98167
125 V	1P+N+G	63-94075	67-94075	63-98075	67-98075
125 250 V	2P+N+G	63-94076	67-94076	63-98076	67-98076
208 V	2P+G	63-94162	67-94162	63-98162	67-98162
208 V	3P+G	63-94163	67-94163	63-98163	67-98163
250 V	2P+G	63-94072	67-94072	63-98072	67-98072
250 V	3P+G	63-94073	67-94073	63-98073	67-98073
277 V	1P+N+G	63-94045	67-94045	63-98045	67-98045
277 480 V	3P+N+G	63-94047	67-94047	63-98047	67-98047
347 600 V	3P+N+G	63-94147	67-94147	63-98147	67-98147
480 V	2P+G	63-94042	67-94042	63-98042	67-98042
480 V	3P+G	63-94043	67-94043	63-98043	67-98043
600 V	2P+G	63-94142	67-94142	63-98142	67-98142
600 V	3P+G	63-94143	67-94143	63-98143	67-98143

For international configurations and ratings (IEC,CE) visit meltric.com/international-catalog or contact Customer Service at 800-433-7642.

Main Options



Auxiliary/Pilot Contacts



Mushroom Pawl



Padlock Pawl



Self-Returning Lid
Recommended for cord applications to keep lid tucked in to avoid damage.

! See pages 237-246 for detailed information on these options

RECEPTACLE OPTIONS	SUFFIX #	INLET OPTIONS	SUFFIX #
With 2 Auxiliary/Pilot Contacts	**Recept # -262**	With 2 Auxiliary/Pilot Contacts	**Inlet # -262**
With 4 Auxiliary/Pilot Contacts	**Recept # -264**	With 4 Auxiliary/Pilot Contacts	**Inlet # -264**
With 6 Auxiliary/Pilot Contacts	**Recept # -976**	With 6 Auxiliary/Pilot Contacts	**Inlet # -976**
Straight Insertion	**Recept # -352[2]**	Self-Ejecting Plug Release**	**Inlet # -338**
Self-Ejecting Connector Release**	**Recept # -354[2]**	Without Lockout Hole	**Inlet # -A155**
Mushroom Pawl	**Recept # -375**	For Microswitch	**Inlet # -270[3,4]**
Padlock Pawl	**Recept # -843**		
Screw-Type Locking Pawl	**Recept # -845**		
Metal Pawl (on Poly Receptacle)	**Recept # -824**		
Self-Returning Lid (Manual Close)	**Recept # -NC**		
With Microswitch	**Recept # -270[3,4]**		

Notes:

** For self-ejecting connectors and plugs, a 443 suffix must be added to the handle part number. See pages 239-240 for more information.

[2] This option includes the Self-Returning Lid.

[3] Not UL/CSA listed.

[4] Not available on 3P+N+G configurations.

Order Example: 480 V DSN150 + 2 auxiliary contacts
DSN150 Poly inlet 3P+G = 63-98043-***262***

Handle Option Guide pgs 243-244

INSTALLATION ACCESSORIES – SIZE 5

When properly installed, all accessories meet or exceed the environmental ratings of the devices they are mounted to; unless otherwise noted.

HANDLES

HANDLE WITH NPT		PART # POLY	PART # METAL
 Poly / Metal	3/4"	515P0N07	595P0N07
	1"	515P0N10	595P0N10
	1 1/4"	515P0N12	595P0N12
	1 1/2"	515P0N15	595P0N15
	2"	515P0N20	595P0N20

For available cord grips, see pg 231.

POLY HANDLE WITH CORD GRIP	CABLE RANGE	PART #
	.980-1.260"	715P0EP4
	1.260-1.560"	715P0FP1
	1.520-1.860"	715P0GP2

METAL HANDLE WITH CORD GRIP	CABLE RANGE	PART #
	1.250-1.375"	795P0FS1
	1.438-1.562"	795P0FS2*
	1.562-1.688"	795P0FS3*
	1.688-1.812"	795P0GS1

*May require stripping of cable jacket.

OVERSIZED METAL HANDLE WITH NPT		
	3/4"	795P0N07
	1"	795P0N10
	1 1/4"	795P0N12
	1 1/2"	795P0N15
	2"	795P0N20
	2 1/2"	795P0N25

For available cord grips, see pg 231.

SANTOPRENE HANDLE		
	.708-.984"	555P0D25
	.984-1.377"	555P0D35
	1.377-1.771"	555P0D45
	1.771-1.929"	555P0D49

ANGLES

POLY ANGLE			
	30°	515M3	

METAL ANGLE			
	0°	595M0	
	30°	595M3	
	30° Oversized	795M3	Mounts on oversize box only. Order with 7T6F0N25XL box. See pg 52.
	70°	595M7	

BOXES

POLY ANGLE WITH METAL BOX WITH NPT				
 * 108.7 in³	30°	1 1/4"	715C3N12	* Interior volume with receptacle installed.
	30°	1 1/2"	715C3N15	
	30°	2"	715C3N20	
	30°	2 1/2"	715C3N25	

METAL ANGLE WITH METAL BOX WITH NPT				
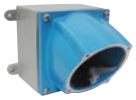 * 111.8 in³	30°	1 1/4"	795C3N12	* Interior volume with receptacle installed.
	30°	1 1/2"	795C3N15	
	30°	2"	795C3N20	
	30°	2 1/2"	795C3N25	

METAL BOX WITH NPT				
	0°	1 1/4"	7T5F0N12	* Interior volume with receptacle installed.
	0°	1 1/2"	7T5F0N15	
	0°	2"	7T5F0N20	
	0°	2 1/2"	7T5F0N25	

NPT on top or bottom (if rotated). For other configurations, contact Customer Service.

MISCELLANEOUS ACCESSORIES

PROTECTIVE INLET/PLUG CAP		
	31-9A426	For Inlets/Plugs Only. Covers lockout hole for watertight seal on inlet. Consult Customer Service for availability.

PADLOCKABLE INLET/PLUG CAP		
	DS9MC	Aluminum – For Inlets/Plugs Only. -A155 suffix required on inlet part # to retain water ingress protection.

CORD GRIP WITH OR WITHOUT MESH		
	see pg 231	

EASY RETROFIT ADAPTER PLATES		
	see pg 246	Mount to existing boxes.

RECEPTACLE LOCKING PIN		
	LP-843	Requires Padlockable Pawl option (-843) on receptacle.

DSN Spare Parts

Male Configuration

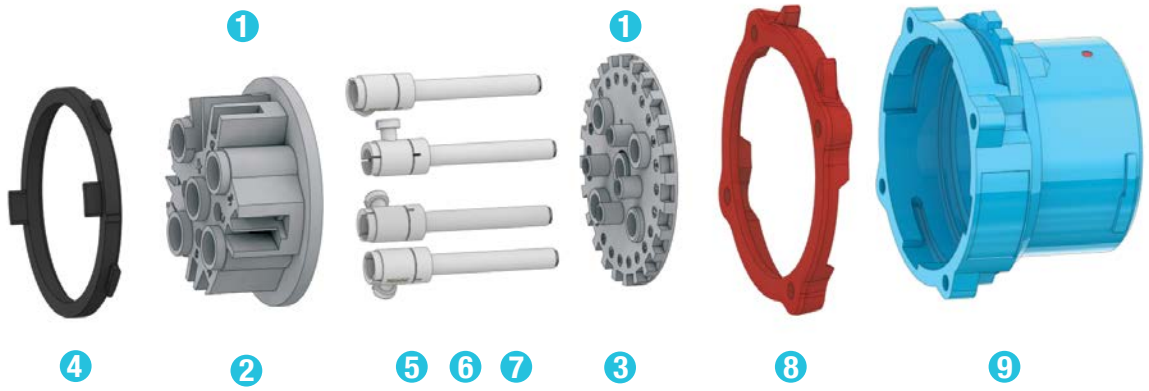

			DSN20 POLY	DSN30 POLY	DSN60 POLY	DSN100 POLY	DSN100 METAL	DSN150 POLY	DSN150 METAL
1	Plug Insulator (Top & Bottom)		63-1A010*	63-3A010*	63-6A010*	63-8A010*	67-8A010*	63-9A010*	67-9A010*
2	Insulator Bottom		63-1A010-B	63-3A010-B	63-6A010-B	63-8A010-B	67-8A010-B	63-9A010-B	67-9A010-B
3	Insulator Top		63-1A010-T*	63-3A010-T*	63-6A010-T*	63-8A010-T*	67-8A010-T*	63-9A010-T*	67-9A010-T*
4	Locking Ring		63-1A583	63-3A583	63-6A583	63-8A583	67-8A583	63-9A583	67-9A583
5	Plug Phase Contact		63-1A011	63-3A011	63-6A011	63-8A011	67-8A011	63-9A011	67-9A011
6	Plug Pilot Contact		-	63-3A011-972	63-6A011-972	63-8A011-972	67-8A011-972	63-9A011-972	67-9A011-972
7	Plug Ground Contact		63-1A019	63-3A019	63-6A019	63-8A019	67-8A019	63-9A019	67-9A019
8	Color-Coded Voltage Gasket		63-1AJ26	63-3AJ26	63-6AJ26	63-8AJ26	67-8AJ26	63-9AJ26	67-9AJ26
			63-1AC26	63-3AC26	63-6AC26	63-8AC26	67-8AC26	63-9AC26	67-9AC26
			63-1AB26	63-3AB26	63-6AB26	63-8AB26	67-8AB26	63-9AB26	67-9AB26
			63-1AR26	63-3AR26	63-6AR26	63-8AR26	67-8AR26	63-9AR26	67-9AR26
			63-1AN26	63-3AN26	63-6AN26	63-8AN26	67-8AN26	63-9AN26	67-9AN26
9	Plug Casing		63-1A014*	63-3A014*	63-6A014*	63-8A014*	67-8A014*	63-9A014*	67-9A014*

*** Please provide full part number for accurate part alignment**

Part numbers in catalog are for current revisions, others may be available upon request.

For replacement parts contact Customer Service at 800-433-7642.

Female Configuration



			DSN20 POLY	DSN30 POLY	DSN60 POLY	DSN100 POLY	DSN100 METAL	DSN150 POLY	DSN150 METAL
1	Receptacle Insulator (Top & Bottom)		63-1A020*	63-3A020*	63-6A020*	63-8A020*	67-8A020*	63-9A020*	67-9A020
2	Insulator Top		63-1A020-T*	63-3A020-T*	63-6A020-T*	63-8A020-T*	67-8A020-T*	63-9A020-T*	67-9A020-T*
3	Insulator Bottom		63-1A020-B	63-3A020-B	63-6A020-B	63-8A020-B	67-8A020-B	63-9A020-B	67-9A020-B
4	Locking Ring		63-1A583	63-3A583	63-6A583	63-8A583	67-8A583	63-9A583	67-9A583
5	Receptacle Phase Contact		63-1A021	63-3A021	63-6A021	63-8A021	67-8A021	63-9A021	67-9A021
6	Receptacle Pilot Contact		-	63-3A021-972	63-6A021-972	63-8A021-972	67-8A021-972	63-9A021-972	67-9A021-972
7	Receptacle Ground Contact		63-1A029	63-3A029	63-6A029	63-8A029	67-8A029	63-9A029	67-9A029
8	Color-Coded Voltage Gasket		63-1AJ26	63-3AJ26	63-6AJ26	63-8AJ26	67-8AJ26	63-9AJ26	67-9AJ26
			63-1AC26	63-3AC26	63-6AC26	63-8AC26	67-8AC26	63-9AC26	67-9AC26
			63-1AB26	63-3AB26	63-6AB26	63-8AB26	67-8AB26	63-9AB26	67-9AB26
			63-1AR26	63-3AR26	63-6AR26	63-8AR26	67-8AR26	63-9AR26	67-9AR26
			63-1AN26	63-3AN26	63-6AN26	63-8AN26	67-8AN26	63-9AN26	67-9AN26
9	Receptacle Casing (as shown)		63-1A024*	63-3A024*	63-6A024*	63-8A024*	67-8A024*	63-9A024*	67-9A024*
	Lid Replacement Kit		63-1A125	63-3A125	63-6A125	63-8A125	67-8A925	63-9A125	67-9A925
	Pawl Replacement Kit Polyester		63-1A824	63-3A824	63-6A824	63-8A824	-	63-9A824	-
	Pawl Replacement Kit Metal		63-1A924	63-3A924	63-6A924	63-8A924	67-8A824	63-9A924	67-9A824
	Drawbar Replacement Kit		-	-	-	-	-	63-9A726	67-9A726

*** Please provide full part number for accurate part alignment**

Part numbers in catalog are for current revisions, others may be available upon request.

For replacement parts contact Customer Service at 800-433-7642.

DSN DIMENSIONS – Provided in Inches

SCAN ME >>

Dimensions are for reference only and may change depending on accessories used. For precise dimensions contact MELTRIC Engineering.

Plug

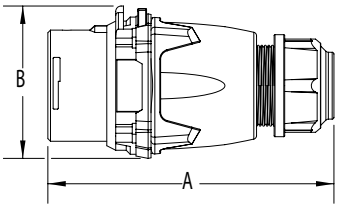

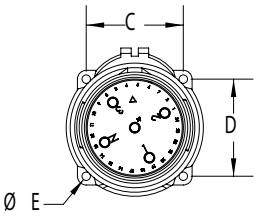

Inlet

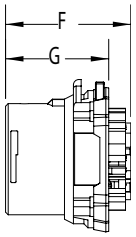

PRODUCT	A	B	C	D	øE	F	G
DSN20/DSN12c	5.28	2.40	1.65	1.65	0.17	2.46	1.87
DSN30/DSN24c	5.75	2.91	1.89	1.89	0.18	2.56	1.97
DSN60/DSN37c	6.30	3.46	2.17	2.17	0.19	2.8	2.21
DSN100	6.70	3.77	2.59	2.59	0.24	3.42	2.38
DSN150	8.33	4.59	3.20	3.20	0.24	4.14	3.04

Connector

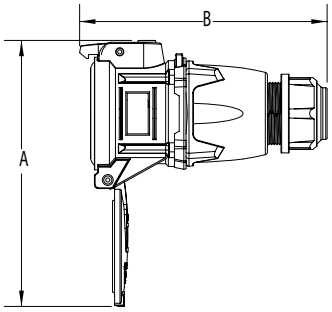

Receptacle

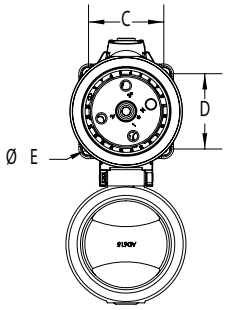

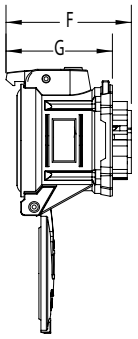

Extended Drawbars

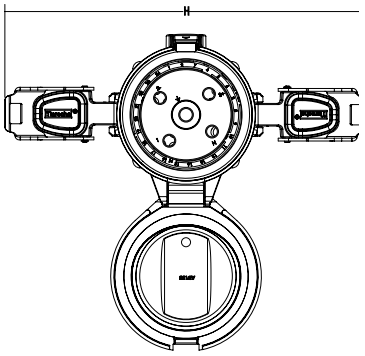

PRODUCT	A	B	C	D	øE	F	G	H
DSN20/DSN12c	5.26	5.60	1.65	1.65	0.19	3.15	2.10	N/A
DSN30/DSN24c	7.05	6.93	1.89	1.89	0.18	3.53	2.88	N/A
DSN60/DSN37c	7.74	7.22	2.17	2.17	0.2	3.64	3.09	N/A
DSN100	8.96	7.90	2.59	2.59	0.22	4.53	3.37	N/A
DSN150	11.04	10.02	3.20	3.20	0.23	5.71	4.74	12.62

Box /30° Angle/ Receptacle/Plug

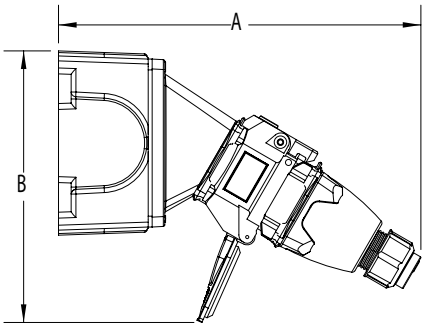

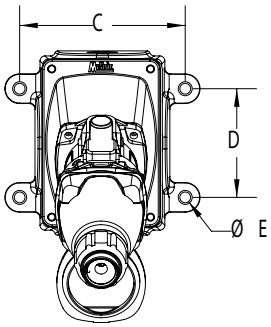

PRODUCT	A	B	C	D	øE
DSN20/DSN12c	7.80	7.25	4.19	2.75	0.27
DSN30/DSN24c	9.85	7.60	4.19	2.75	0.27
DSN60/DSN37c	10.48	8.20	4.19	2.75	0.27
DSN100	11.87	10.74	5.00	3.81	0.33
DSN150	16.06	10.33	6.75	4.25	0.31

DSN

30° Angle/Receptacle/Plug

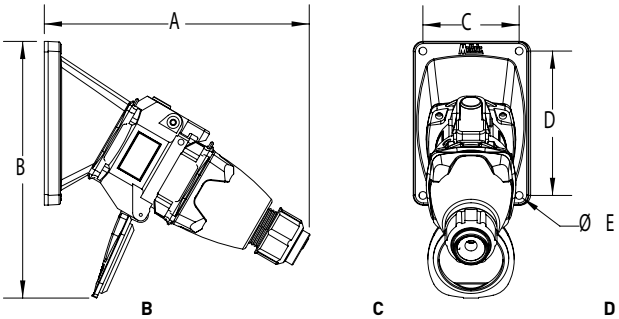

PRODUCT	A	B	C	D	øE
DSN20/DSN12c	7.80	7.10	2.50	3.75	0.18
DSN30/DSN24c	9.85	8.50	2.50	3.75	0.22
DSN60/DSN37c	10.48	9.02	2.50	3.75	0.22
DSN100	9.17	10.45	3.43	4.83	0.26
DSN150	16.06	12.05	4.83	4.83	0.28

70° Wall Box/Receptacle

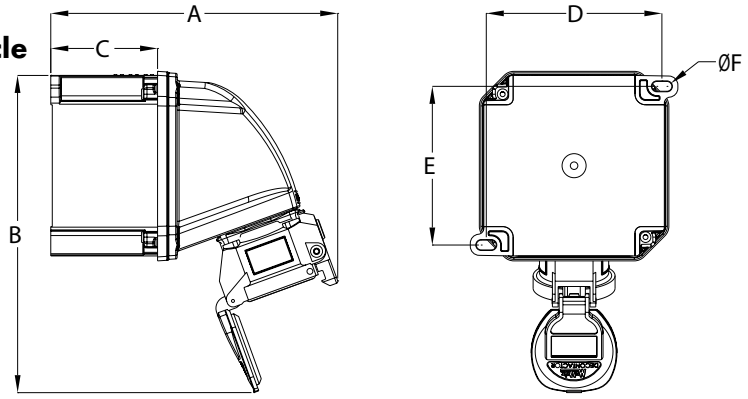

PRODUCT	A	B	C	D	E	øF
DSN20/DSN12c	7.51	8.30	2.80	4.60	4.15	0.26
DSN30/DSN24c	7.93	9.51	2.80	4.60	4.15	0.26
DSN60*/DSN37c	8.91	11.55	2.80	6.17	5.73	0.26
DSN100	9.07	12.70	2.80	6.17	5.73	0.26

* Box has 4 mounting feet.

Plug/Connector

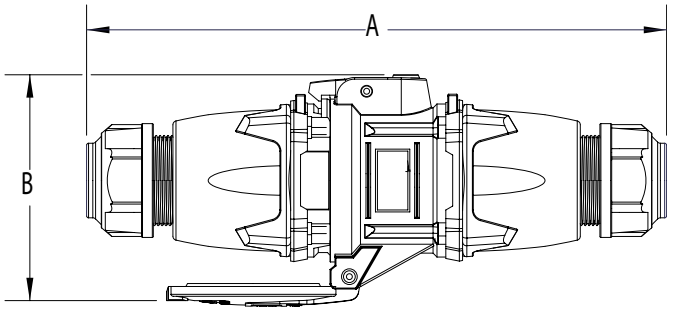

PRODUCT	A	B
DSN20/DSN12c	9.09	3.50
DSN30/DSN24c	10.43	4.57
DSN60/DSN37c	11.26	4.80
DSN100	12.17	8.03
DSN150	19.53	8.03

DS
Switch-Rated







Main Advantages

- Switch & hp rated (AC only)
- 65 kA to 100 kA short circuit rated*
- Up to 6 auxiliary contacts
- Amperage ratings up to 200 A
- Metal or Poly construction

* See note under General Ratings on the next page.

SCAN ME >>

- Features and Ratings p. 42
- DS20 p. 43
- DS30 p. 45
- DS60 p. 47
- DS100 p. 49
- DS200 p. 51
- Spare Parts p. 53
- Dimensions p. 55

PRODUCT FEATURES

DECONTACTOR™ Technology

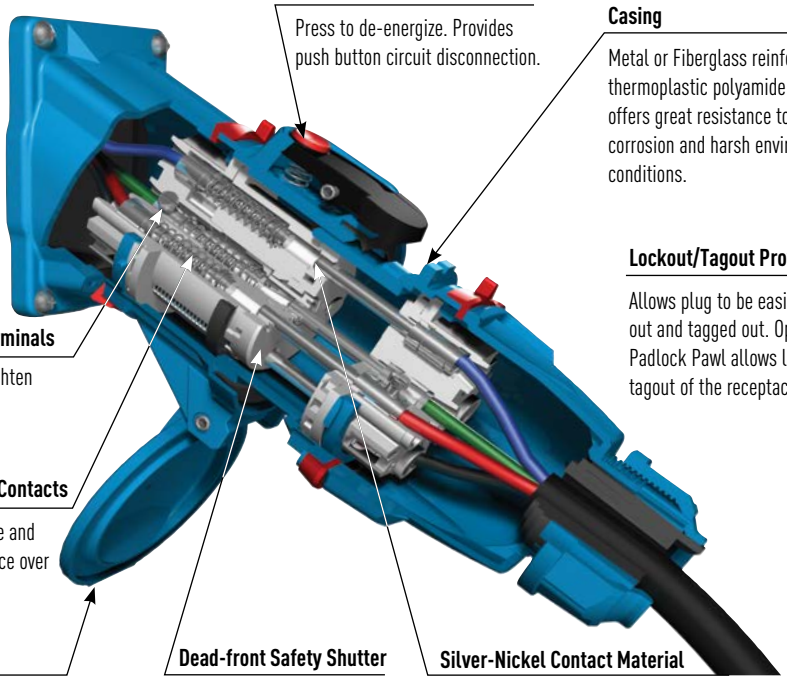

OFF Button

Press to de-energize. Provides push button circuit disconnection.

Casing

Metal or Fiberglass reinforced thermoplastic polyamide material offers great resistance to impact, corrosion and harsh environmental conditions.

Lockout/Tagout Provisions

Allows plug to be easily locked out and tagged out. Optional Padlock Pawl allows lockout/tagout of the receptacle.

Spring Assisted Screw Terminals

Patented design ensures "Tighten and Forget" confidence.

Spring-Loaded Butt-Style Contacts

Ensures optimal contact force and superior electrical performance over thousands of operations.

Lid

Provides 3R (DS20/DS30 only) or Type 4X/IP69/IP69K for additional protection in harsh environments.

Dead-front Safety Shutter

Ensures safety by preventing user access to live parts.

Silver-Nickel Contact Material

Solid silver-nickel contact surfaces provide superior conductivity, durability and corrosion resistance.

General Ratings

Amperage	20 to 200 A
Voltage	600 VAC Max
Frequency	50-400 Hz
Horsepower	.75 to 100 hp
Short-Circuit (Withstand & Close)	10 kA to 100 kA*
Environmental	Type 3R (DS20, 30 only) or Type 4X/IP69/IP69K
Temperature	Min -40°F/Max 140°F

* DS20, 30, 60 are rated 100 kA. DS200 is rated 10 kA. Testing was performed with RK1 current limiting fuses sized at 400% of the highest full load motor ampacity associated with the devices hp rating.

* DS100 and DS200 are rated 65 kA. Testing was performed with RK5 time delay fuses sized at 100% of the device's rated ampacity.

Highlighted Feature

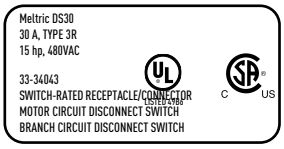

MELTRIC DS Series Switch-Rated devices are UL & CSA rated for motor circuit and branch circuit disconnect switching – up to 100 hp and up to 200 A.

Listings

Category	UL	CSA	IEC	NOM
Plugs and Receptacles	UL 1682	C22.2 No. 182.1	60309-1	NOM-003-SCFI-2014
Branch Circuit Disconnect Switching (AC only)	UL Subject 2682 (Performance tests from UL 98)	UL Subject 2682	60947-3, AC22, AC23	
Motor Circuit Disconnect Switching (AC only)	UL Subject 2682 (Performance tests from UL 98)	UL Subject 2682	60947-3, AC22, AC23	

Operating Instructions



When the plug and receptacle are latched together, the circuit is connected.



Pressing the pawl breaks the connection and opens the circuit. The plug is ejected to its rest position; The contacts are now de-energized.



Rotating the de-energized plug 30° counterclockwise closes the safety shutter and frees the plug to be withdrawn from the receptacle.



The plug and the receptacle are separated. The safety shutter prevents access to live parts.

5 To reconnect, align red dots, insert plug into receptacle, rotate 30° clockwise, and apply insertion force.

DS20 Switch-Rated - 20 A

UL/CSA Ratings

- **Max Amperage & Voltage**
  20 A, 600 VAC
- **Switch-Rating (AC Only)**
  Branch Circuit & Motor Circuit Disconnect Switching
- **Horsepower Ratings**

120 V	1Ø	.75 hp
240 V	1Ø	1.5 hp
208 V	3Ø	3 hp
240 V	3Ø	5 hp
480 V	3Ø	7.5 hp
600 V	3Ø	10 hp

- **Short Circuit Rating**
  100 kA Close & Withstand
  Testing was performed with 80 A RK1 fast-acting Mersen fuses.
- **Environmental Ratings**
  Type 3R (Standard)
  Type 4X (Optional)
- **Temperature Range**
  Min -40°F/Max 140°F
  See pg 260 for temperatures outside of this range.
- **Wiring Capacity**
  Based on THHN wire sizes.
  Min 14 AWG Max 8 AWG
  Aux Contact: 14 AWG
- **Certifications**
  UL 2682, UL 1682,
  CSA C22.2 NO. 182.1, NOM

Receptacle (female)



Inlet (male)



! Remember to add installation accessories to your order

North American UL/CSA Configurations

VOLTAGE	POLARITY	PART # POLY	PART # POLY
120 V	1P+N+G	33-14165	33-18165
120 208 V	3P+N+G	33-14167	33-18167
125 V	1P+N+G	33-14075	33-18075
125 250 V	2P+N+G	33-14076	33-18076
208 V	2P+G	33-14162	33-18162
208 V	3P+G	33-14163	33-18163
250 V	2P+G	33-14072	33-18072
250 V	3P+G	33-14073	33-18073
277 V	1P+N+G	33-14045	33-18045
277 480 V	3P+N+G	33-14047	33-18047
347 600 V	3P+N+G	33-14147	33-18147
480 V	2P+G	33-14042	33-18042
480 V	3P+G	33-14043	33-18043
600 V	2P+G	33-14142	33-18142
600 V	3P+G	33-14143	33-18143

For international configurations and ratings (IEC, CE) visit meltric.com/international-catalog or contact Customer Service at 800-433-7642.

Main Options



Auxiliary/Pilot Contacts



Mushroom Pawl



Padlock Pawl



Self-Returning Lid
Recommended for cord applications to keep lid tucked in to avoid damage.

! See pages 237-246 for detailed information on these options

RECEPTACLE OPTIONS	SUFFIX #	INLET OPTIONS	SUFFIX #
With 2 Auxiliary/Pilot Contacts	**Recept # -972**	With 2 Auxiliary/Pilot Contacts	**Inlet # -972**
Type 4X & Self-Returning Lid	**Recept # -4X**	Type 4X Watertightness	**Inlet # -4X**
Straight Insertion	**Recept # -352**[2]	Self-Ejecting Plug Release**	**Inlet # -338**
Self-Ejecting Connector Release**	**Recept # -354**[2]	Without Lockout Hole	**Inlet # -A155**
Mushroom Pawl	**Recept # -375**	For Microswitch	**Inlet # -270**[3,4]
Padlock Pawl	**Recept # -843**		
Screw-Type Locking Pawl	**Recept # -845**		
Metal Pawl (on Poly Receptacle)	**Recept # -824**		
Self-Returning Lid (Manual Close)	**Recept # -NC**		
With Microswitch	**Recept # -270**[3,4]		

Notes:

** For self-ejecting connectors and plugs, a 443 suffix must be added to all handles except the Poly Handle with NPT and Poly Handle with Cord Grip as these handles come with an integrated cable guide. See pages 239-240 for more information.

2 This option includes the Self-Returning Lid.

3 Not UL/CSA listed.

4 Not available on 3P+N+G configurations.

Order Example: 208 V DS20 + 2 auxiliary contacts
DS20 Poly inlet 2P+G = 33-18162-***972***

Handle Option Guide pgs 243-244

INSTALLATION ACCESSORIES – SIZE 2

When properly installed, all accessories meet or exceed the environmental ratings of the devices they are mounted to; unless otherwise noted.

HANDLES

HANDLE WITH NPT		PART # POLY WITH DRAWPLATES	PART # POLY	PART # METAL
NEW Poly with drawplates	1/2"	512P0N05	512P0N05E2615	592P0N05
	3/4"	512P0N07	512P0N07E2615	592P0N07
Poly	1"	512P0N10	512P0N10E2615	592P0N10
	1 1/4"	512P0N12	512P0N12E2615	-
Metal				

For available cord grips, see pg 231.

POLY HANDLE WITH CORD GRIP	CABLE RANGE	PART # WITH DRAWPLATES	PART #
NEW with drawplates	.350-.520"	712P0BP6	712P0BP6E2615
	.520-.680"	712P0CP5	712P0CP5E2615
	.680-.980"	712P0DP4	712P0DP4E2615
	.980-1.260"	712P0EP4	712P0EP4E2615

METAL HANDLE WITH CORD GRIP		
.438-.500"	792P0BS3	
.500-.562"	792P0BS4	
.562-.625"	792P0CS2	
.625-.750"	792P0CS4	
.770-.875"	792P0DS1	
.870-1.000"	792P0DS3	

POLY HANDLE		
.200-.820"	512P0D21	

POLY HANDLE WITH CLAMP & BUSHING		
.750-.875"	712P0S14	
.875-1.000"	712P0S16	
1.000-1.125"	712P0S18	
1.125-1.250"	712P0S20	
1.250-1.375"	712P0S22	

ANGLES

POLY ANGLE			
30°	512M3		
70°	512M7	Panel mounting only.	

METAL ANGLE			
0°	592M0		
30°	592M3		
FS/FD 30°	792M3FS	Base measures approximately 4.2" x 2.7". Due to the variation in sizes of FS boxes, please verify that your FS box matches our dimensions, if not call Customer Service for other solutions.	

BOXES

POLY CONDUIT ENTRY WITH NPT		PART #	
30°	1/2"	512B3N05	For poly devices only
30°	3/4"	512B3N07	* Interior volume with receptacle installed.

* 7.0 in³

POLY WALL BOX WITH ANGLE			
70°		512C7000	70° poly boxes are not drilled.
			* Interior volume with receptacle installed.
	Ground Bar	51AA089	

* 82.0 in³

POLY ANGLE WITH METAL BOX WITH NPT			
70°	1/2"	712C7N05	
70°	3/4"	712C7N07	* Interior volume with receptacle installed.
70°	1"	712C7N10	
70°	1 1/4"	712C7N12	
70°	1 1/2"	712C7N15	

* 74.6 in³

METAL BOX WITH NPT		
0°	1/2"	7T1F0N05
0°	3/4"	7T1F0N07
0°	1"	7T1F0N10
0°	1 1/4"	7T1F0N12

POLY ANGLE WITH METAL BOX WITH NPT			
30°	1/2"	712C3N05	
30°	3/4"	712C3N07	* Interior volume with receptacle installed.
30°	1"	712C3N10	
30°	1 1/4"	712C3N12	

* 28.7 in³

NPT on top or bottom (if rotated). For other configurations, contact Customer Service.

MISCELLANEOUS ACCESSORIES

FINGER DRAWPLATES		
61-3A346	Set of Two (2) Recommended for cord to cord assembly applications, for facilitated mating.	

PROTECTIVE INLET/PLUG CAP		
31-1A426	For Inlets/Plugs Only.	

PADLOCKABLE INLET/PLUG CAP		
DS1PC	For Inlets/Plugs Only.	

SPRING-LOADED PADLOCKABLE INLET/PLUG CAP		
31-1A226	For Inlets/Plugs Only. In order to achieve max water ingress protection of Type 3R/IP55, spring loaded caps should be ordered with inlets equipped with -A155 suffix.	

EASY RETROFIT ADAPTER PLATES		
see pg 246	Mount to existing boxes.	

RECEPTACLE LOCKING PIN		
LP-843	Requires Padlockable Pawl option (-843) on receptacle.	

DS30 Switch-Rated - 30 A

UL/CSA Ratings

- **Max Amperage & Voltage**
  30 A, 600 VAC
- **Switch-Rating (AC Only)**
  Branch Circuit & Motor Circuit Disconnect Switching
- **Horsepower Ratings**

120 V	1Ø	1.5 hp
240 V	1Ø	3 hp
208 V	3Ø	5 hp
240 V	3Ø	5 hp
480 V	3Ø	15 hp
600 V	3Ø	15 hp

- **Short Circuit Rating**
  100 kA Close & Withstand
  Testing was performed with 125 A RK1 fast-acting Mersen fuses.
- **Environmental Ratings**
  Type 3R (Standard)
  Type 4X (Optional)
- **Temperature Range**
  Min -40°F/Max 140°F
  See pg 260 for temperatures outside of this range.
- **Wiring Capacity**
  Based on THHN wire sizes.
  Min 14 AWG Max 4 AWG
  Aux Contacts: 14 AWG
- **Certifications**
  UL 2682, UL 1682,
  CSA C22.2 NO. 182.1, NOM

Receptacle
(female)



Inlet
(male)



! Remember to add installation accessories to your order

North American UL/CSA Configurations

VOLTAGE	POLARITY	PART # POLY	PART # POLY
120 V	1P+N+G	33-34165	33-38165
120 208 V	3P+N+G	33-34167	33-38167
125 V	1P+N+G	33-34075	33-38075
125 250 V	2P+N+G	33-34076	33-38076
208 V	2P+G	33-34162	33-38162
208 V	3P+G	33-34163	33-38163
250 V	2P+G	33-34072	33-38072
250 V	3P+G	33-34073	33-38073
277 V	1P+N+G	33-34045	33-38045
277 480 V	3P+N+G	33-34047	33-38047
347 600 V	3P+N+G	33-34147	33-38147
480 V	2P+G	33-34042	33-38042
480 V	3P+G	33-34043	33-38043
600 V	2P+G	33-34142	33-38142
600 V	3P+G	33-34143	33-38143

For international configurations and ratings (IEC, CE) visit meltric.com/international-catalog or contact Customer Service at 800-433-7642.

Main Options



Auxiliary/Pilot Contacts



Mushroom Pawl



Padlock Pawl



Self-Returning Lid
Recommended for cord applications to keep lid tucked in to avoid damage.

! See pages 237-246 for detailed information on these options

RECEPTACLE OPTIONS	SUFFIX #	INLET OPTIONS	SUFFIX #
With 2 Auxiliary/Pilot Contacts	**Recept # -972**	With 2 Auxiliary/Pilot Contacts	**Inlet # -972**
With 3 Auxiliary/Pilot Contacts	**Recept # -973**	With 3 Auxiliary/Pilot Contacts	**Inlet # -973**
With 4 Auxiliary/Pilot Contacts	**Recept # -974**	With 4 Auxiliary/Pilot Contacts	**Inlet # -974**
Type 4X & Self-Returning Lid	**Recept # -4X**	Type 4X Watertightness	**Inlet # -4X**
Straight Insertion	**Recept # -352[2]**	Self-Ejecting Plug Release**	**Inlet # -338**
Self-Ejecting Connector Release**	**Recept # -354[2]**	Without Lockout Hole	**Inlet # -A155**
Mushroom Pawl	**Recept # -375**	For Microswitch	**Inlet # -270[3,4]**
Padlock Pawl	**Recept # -843**		
Screw-Type Locking Pawl	**Recept # -845**		
Metal Pawl (on Poly Receptacle)	**Recept # -824**		
Self-Returning Lid (Manual Close)	**Recept # -NC**		
With Microswitch	**Recept # -270[3,4]**		

Notes:

** For self-ejecting connectors and plugs, a 443 suffix must be added to the handle part number. See pages 239-240 for more information.

[2] This option includes the Self-Returning Lid.

[3] Not UL/CSA listed.

[4] Not available on 3P+N+G configurations.

Order Example: 480 V DS30 + 2 auxiliary contacts
DS30 Poly inlet 3P+G = 33-38043***-972***

Handle Option Guide pgs 243-244

INSTALLATION ACCESSORIES – SIZE 3

When properly installed, all accessories meet or exceed the environmental ratings of the devices they are mounted to; unless otherwise noted.

HANDLES

HANDLE WITH NPT		PART # POLY	PART # METAL
 Poly	1/2"	513P0N05	593P0N05
	3/4"	513P0N07	593P0N07
 Metal	1"	513P0N10	593P0N10
	1 1/4"	513P0N12	593P0N12

For available cord grips, see pg 231.

POLY HANDLE WITH CORD GRIP	CABLE RANGE	PART #
	.520-.680"	713P0CP5
	.680-.980"	713P0DP4
	.980-1.260"	713P0EP4

METAL HANDLE WITH CORD GRIP		
	.635-.750"	793P0CS4
	.770-.850"	793P0DS1
	.875-1.000"	793P0DS3
	1.000-1.125"	793P0ES2

POLY HANDLE	
.390-1.180"	513P0D30

POLY HANDLE WITH BUILT IN DRAWPLATES		
	.390-1.180"	513P0D30473
	Makes connector closures easier.	

POLY HANDLE WITH CLAMP & BUSHING		
	.750-.875"	713P0S14
	.875-1.000"	713P0S16
	1.000-1.125"	713P0S18
	1.125-1.250"	713P0S20
	1.250-1.375"	713P0S22

ANGLES

POLY ANGLE			
	30°	513M3	
	70°	513M7	Panel mounting only.

METAL ANGLE			
	0°	593M0	
	30°	593M3	
	FS/FD 30°	793M3FS	Base measures approximately 4.2" x 2.7". Due to the variation in sizes of FS boxes, please verify that your FS box matches our dimensions, if not call Customer Service for other solutions.
	70°	593M7	

BOXES

POLY CONDUIT ENTRY WITH NPT				
 * 13.5 in³	30°	1/2"	513B3N05	* Interior volume with receptacle installed.
	30°	3/4"	513B3N07	
	30°	1"	513B3N10	

POLY WALL BOX WITH ANGLE				
 * 179.41 in³	70°		513C7000	70° poly boxes are not drilled. * Interior volume with receptacle installed.
		Ground Bar	51AA089	

POLY ANGLE WITH METAL BOX WITH NPT				
 * 177.7 in³	70°	1/2"	713C7N05	* Interior volume with receptacle installed.
	70°	3/4"	713C7N07	
	70°	1"	713C7N10	
	70°	1 1/4"	713C7N12	
	70°	1 1/2"	713C7N15	

METAL BOX WITH NPT			
	0°	1/2"	7T1F0N05
	0°	3/4"	7T1F0N07
	0°	1"	7T1F0N10
	0°	1 1/4"	7T1F0N12

POLY ANGLE WITH METAL BOX WITH NPT				
 * 29.6 in³	30°	1/2"	713C3N05	* Interior volume with receptacle installed.
	30°	3/4"	713C3N07	
	30°	1"	713C3N10	
	30°	1 1/4"	713C3N12	

NPT on top or bottom (if rotated). For other configurations, contact Customer Service.

MISCELLANEOUS ACCESSORIES

FINGER DRAWPLATES		
	61-6A346	Set of Two (2) Recommended for cord to cord assembly applications, for facilitated mating.

PROTECTIVE INLET/PLUG CAP		
	31-3A426	For Inlets/Plugs Only.

PADLOCKABLE INLET/PLUG CAP		
	DS3PC	For Inlets/Plugs Only.

SPRING-LOADED PADLOCKABLE INLET/PLUG CAP		
	31-3A226	For Inlets/Plugs Only. In order to achieve max water ingress protection of Type 3R/IP55, spring loaded caps should be ordered with inlets equipped with -A155 suffix.

EASY RETROFIT ADAPTER PLATES		
	see pg 246	Mount to existing boxes.

RECEPTACLE LOCKING PIN		
	LP-843	Requires Padlockable Pawl option (-843) on receptacle.

DS60 Switch-Rated - 60 A

UL/CSA Ratings

- **Max Amperage & Voltage**
  60 A, 600 VAC
- **Switch-Rating (AC Only)**
  Branch Circuit & Motor Circuit Disconnect Switching
- **Horsepower Ratings**

120 V	1Ø	3 hp
240 V	1Ø	5 hp
208 V	3Ø	10 hp
240 V	3Ø	10 hp
480 V	3Ø	25 hp
600 V	3Ø	25 hp

- **Short Circuit Rating**
  100 kA Close & Withstand
  Testing was performed with 250 A RK1 fast-acting Mersen fuses.
- **Environmental Ratings**
  Type 4X/IP66/IP67/IP69/IP69K
- **Temperature Range**
  Min -40°F/Max 140°F
  See pg 260 for temperatures outside of this range.
- **Wiring Capacity**
  Based on THHN wire sizes.
  Min 10 AWG Max 2 AWG
  Aux Contacts: Prewired 14 AWG
- **Certifications**
  UL 2682, UL 1682,
  CSA C22.2 NO. 182.1, NOM

Receptacle (female)



Inlet (male)



! Remember to add installation accessories to your order

North American UL/CSA Configurations

NOTE: Poly devices should not be inter-mated with metal devices

VOLTAGE	POLARITY	PART # POLY	PART # METAL	PART # POLY	PART # METAL
120 V	1P+N+G	33-64165	37-64165	33-68165	37-68165
120 208 V	3P+N+G	33-64167	37-64167	33-68167	37-68167
125 V	1P+N+G	33-64075	37-64075	33-68075	37-68075
125 250 V	2P+N+G	33-64076	37-64076	33-68076	37-68076
208 V	2P+G	33-64162	37-64162	33-68162	37-68162
208 V	3P+G	33-64163	37-64163	33-68163	37-68163
250 V	2P+G	33-64072	37-64072	33-68072	37-68072
250 V	3P+G	33-64073	37-64073	33-68073	37-68073
277 V	1P+N+G	33-64045	37-64045	33-68045	37-68045
277 480 V	3P+N+G	33-64047	37-64047	33-68047	37-68047
347 600 V	3P+N+G	33-64147	37-64147	33-68147	37-68147
480 V	2P+G	33-64042	37-64042	33-68042	37-68042
480 V	3P+G	33-64043	37-64043	33-68043	37-68043
600 V	2P+G	33-64142	37-64142	33-68142	37-68142
600 V	3P+G	33-64143	37-64143	33-68143	37-68143

For international configurations and ratings (IEC, CE) visit meltric.com/international-catalog or contact Customer Service at 800-433-7642.

Main Options



Auxiliary/Pilot Contacts



Mushroom Pawl



Padlock Pawl



Self-Returning Lid
Recommended for cord applications to keep lid tucked in to avoid damage.

! See pages 237-246 for detailed information on these options

RECEPTACLE OPTIONS	SUFFIX #	INLET OPTIONS	SUFFIX #
With 2 Auxiliary/Pilot Contacts	**Recept # -972**	With 2 Auxiliary/Pilot Contacts	**Inlet # -972**
With 3 Auxiliary/Pilot Contacts	**Recept # -263**	With 3 Auxiliary/Pilot Contacts	**Inlet # -263**
With 4 Auxiliary/Pilot Contacts	**Recept # -264**	With 4 Auxiliary/Pilot Contacts	**Inlet # -264**
Straight Insertion	**Recept # -352[2]**	Self-Ejecting Plug Release**	**Inlet # -338**
Self-Ejecting Connector Release**	**Recept # -354[2]**	Without Lockout Hole	**Inlet # -A155**
Mushroom Pawl	**Recept # -375**	For Microswitch	**Inlet # -270[3,4]**
Padlock Pawl	**Recept # -843**		
Screw-Type Locking Pawl	**Recept # -845**		
Metal Pawl (on Poly Receptacle)	**Recept # -824**		
Self-Returning Lid (Manual Close)	**Recept # -NC**		
With Microswitch	**Recept # -270[3,4]**		

Notes:

** For self-ejecting connectors and plugs, a 443 suffix must be added to the handle part number. See pages 239-240 for more information.

[2] This option includes the Self-Returning Lid.

[3] Not UL/CSA listed.

[4] Not available on 3P+N+G configurations.

Order Example: ***480 V DS60 + 2 auxiliary contacts***
DS60 Poly inlet 3P+G = 33-68043-***972***

Handle Option Guide pgs 243-244

INSTALLATION ACCESSORIES – SIZE 4

When properly installed, all accessories meet or exceed the environmental ratings of the devices they are mounted to; unless otherwise noted.

HANDLES

HANDLE WITH NPT		PART # POLY	PART # METAL
 Poly / Metal	1/2"	514P0N05	594P0N05
	3/4"	514P0N07	594P0N07
	1"	514P0N10	594P0N10
	1 1/4"	514P0N12	594P0N12
	1 1/2"	514P0N15	594P0N15

For available cord grips, see pg 231.

POLY HANDLE WITH CORD GRIP	CABLE RANGE	PART #
	.680-.980"	714P0DP4
	.980-1.260"	714P0EP4
	1.260-1.560"	714P0FP1

METAL HANDLE WITH CORD GRIP	CABLE RANGE	PART #
	.750-.875"	794P0DS1
	.875-1.000"	794P0DS3
	1.000-1.125"	794P0ES2
	1.125-1.250"	794P0FS0
	1.250-1.375"	794P0FS1
	1.375-1.438"	794P0FS4
	1.438-1.562"	794P0FS2*
	1.562-1.688"	794P0FS3*

*May require stripping of cable jacket.

POLY HANDLE		
	.511-1.377"	514P0D35

POLY HANDLE WITH BUILT IN DRAWPLATES		
	.511-1.377"	514P0D35473

Makes connector closures easier.

SANTOPRENE HANDLE		
	.551-.787"	554P0D20L
	.708-.984"	554P0D25L
	.984-1.377"	554P0D35L
	1.377-1.771"	554P0D45L
	1.771-1.929"	554P0D49L

ANGLES

POLY ANGLE					
	30°	514M3		70°	514M7 Panel mounting only.

METAL ANGLE			
	0°	594M0	
	30°	594M3	
	30°	794M3L	
	30° Oversized	794M3	Mounts on oversize box only. Order with 7T5F0Nxx. See pg 50.
	70°	594M7	

BOXES

POLY CONDUIT ENTRY WITH NPT			PART #	
 * 27.7 in³	30°	1/2"	514B3N05	For poly devices only * Interior volume with receptacle installed.
	30°	3/4"	514B3N07	
	30°	1"	514B3N10	
	30°	1 1/4"	514B3N12	

POLY WALL BOX WITH ANGLE				
 * 181.24 in³	70°		514C7000	70° poly boxes are not drilled. * Interior volume with receptacle installed.
		Ground Bar	51AA089	

POLY ANGLE WITH METAL BOX WITH NPT			
 * 177.7 in³	70°	1/2"	714C7N05
	70°	3/4"	714C7N07
	70°	1"	714C7N10
	70°	1 1/4"	714C7N12
	70°	1 1/2"	714C7N15

* Interior volume with receptacle installed.

METAL BOX WITH NPT		
	0°	1"	7T4F0N10
	0°	1 1/4"	7T4F0N12
	0°	1 1/2"	7T4F0N15
	0°	2"	7T4F0N20

POLY ANGLE WITH METAL BOX WITH NPT			
 * 61.0 in³ Poly Angle * 59.4 in³ Metal Angle	30°	1"	714C3N10
	30°	1 1/4"	714C3N12
	30°	1 1/2"	714C3N15
	30°	2"	714C3N20

For metal angle, replace "71" prefix with "79". * Interior volume with receptacle installed.

MISCELLANEOUS ACCESSORIES

FINGER DRAWPLATES		
	31-6A346	Set of Two (2) Recommended for cord to cord assembly applications, for facilitated mating.

PROTECTIVE INLET/PLUG CAP		
	31-6A426	For Inlets/Plugs Only.

PADLOCKABLE INLET/PLUG CAP		
	DS6PC	Poly – For Inlets/Plugs Only.
	DS6MC	Aluminum – For Inlets/Plugs Only. -A155 suffix required on inlet part # to retain water ingress protection.

SPRING-LOADED PADLOCKABLE INLET/PLUG CAP			
	31-6A226	For Poly Inlets/Plugs Only.	In order to achieve max water ingress protection of Type 3R/IP55, spring loaded caps should be ordered with inlets equipped with -A155 suffix.
	39-6A226	For Metal Inlets/Plugs Only.	

RECEPTACLE LOCKING PIN		
	LP-843	Requires Padlockable Pawl option (-843) on receptacle.

DS100 Switch-Rated - 100 A

UL/CSA Ratings

- **Max Amperage & Voltage**
  100 A, 600 VAC
- **Switch-Rating (AC Only)**
  Branch Circuit & Motor Circuit Disconnect Switching
- **Horsepower Ratings**

120 V	1Ø	3 hp
240 V	1Ø	7.5 hp
208 V	3Ø	10 hp
240 V	3Ø	10 hp
480 V	3Ø	30 hp

- **Short Circuit Rating**
  100 kA Close & Withstand
  Testing was performed with 225 A RK1 fast-acting Mersen fuses.
  10 kA Close & Withstand
  Testing was performed with 400 A RK1 fast-acting Mersen fuses.
- **Environmental Ratings**
  Type 4X/IP66/IP67/IP69/IP69K
- **Temperature Range**
  Min -40°F/Max 140°F
  See pg 260 for temperatures outside of this range.
- **Wiring Capacity**
  Based on THHN wire sizes.
  Min 4 AWG Max 2/0 AWG
  Aux Contacts: Prewired 14 AWG
- **Certifications**
  UL 2682, UL 1682,
  CSA C22.2 NO. 182.1, NOM

Receptacle (female)



Inlet (male)

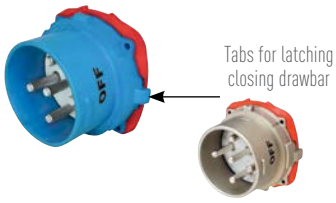

Remember to add installation accessories to your order

North American UL/CSA Configurations

NOTE: Poly devices should not be inter-mated with metal devices

VOLTAGE	POLARITY	PART # POLY	PART # METAL	PART # POLY	PART # METAL
120 V	1P+N+G	33-94165	37-94165	33-98165	37-98165
120 208 V	3P+N+G	33-94167	37-94167	33-98167	37-98167
125 V	1P+N+G	33-94075	37-94075	33-98075	37-98075
125 250 V	2P+N+G	33-94076	37-94076	33-98076	37-98076
208 V	2P+G	33-94162	37-94162	33-98162	37-98162
208 V	3P+G	33-94163	37-94163	33-98163	37-98163
250 V	2P+G	33-94072	37-94072	33-98072	37-98072
250 V	3P+G	33-94073	37-94073	33-98073	37-98073
277 V	1P+N+G	33-94045	37-94045	33-98045	37-98045
277 480 V	3P+N+G	33-94047	37-94047	33-98047	37-98047
347 600 V	3P+N+G	33-94147	37-94147	33-98147	37-98147
480 V	2P+G	33-94042	37-94042	33-98042	37-98042
480 V	3P+G	33-94043	37-94043	33-98043	37-98043
600 V	2P+G	33-94142	37-94142	33-98142	37-98142
600 V	3P+G	33-94143	37-94143	33-98143	37-98143

For international configurations and ratings (IEC, CE) visit meltric.com/international-catalog or contact Customer Service at 800-433-7642.

Main Options



Auxiliary/Pilot Contacts



Mushroom Pawl



Padlock Pawl



Self-Returning Lid
Recommended for cord applications to keep lid tucked in to avoid damage.

See pages 237-246 for detailed information on these options

RECEPTACLE OPTIONS	SUFFIX #	INLET OPTIONS	SUFFIX #
With 2 Auxiliary/Pilot Contacts	Recept # -262	With 2 Auxiliary/Pilot Contacts	Inlet # -262
With 4 Auxiliary/Pilot Contacts	Recept # -264	With 4 Auxiliary/Pilot Contacts	Inlet # -264
With 6 Auxiliary/Pilot Contacts	Recept # -976	With 6 Auxiliary/Pilot Contacts	Inlet # -976
Straight Insertion	Recept # -352[2]	Self-Ejecting Plug Release**	Inlet # -338
Self-Ejecting Connector Release**	Recept # -354[2]	Without Lockout Hole	Inlet # -A155
Mushroom Pawl	Recept # -375	For Microswitch	Inlet # -270[3,4]
Padlock Pawl	Recept # -843		
Screw-Type Locking Pawl	Recept # -845		
Metal Pawl (on Poly Receptacle)	Recept # -824		
Self-Returning Lid (Manual Close)	Recept # -NC		
With Microswitch	Recept # -270[3,4]		

Notes:

** For self-ejecting connectors and plugs, a 443 suffix must be added to the handle part number. See pages 239-240 for more information.

[2] This option includes the Self-Returning Lid.

[3] Not UL/CSA listed.

[4] Not available on 3P+N+G configurations..

Order Example: 480 V DS100 + 2 auxiliary contacts

DS100 Poly inlet 3P+G = 33-98043***-262***

Handle Option Guide pgs 243-244

INSTALLATION ACCESSORIES – SIZE 5

When properly installed, all accessories meet or exceed the environmental ratings of the devices they are mounted to; unless otherwise noted.

HANDLES

HANDLE WITH NPT		PART # POLY	PART # METAL
 Poly	3/4"	515P0N07	595P0N07
	1"	515P0N10	595P0N10
 Metal	1 1/4"	515P0N12	595P0N12
	1 1/2"	515P0N15	595P0N15
	2"	515P0N20	595P0N20

For available cord grips, see pg 231.

POLY HANDLE WITH CORD GRIP	CABLE RANGE	PART #
	.980-1.260"	715P0EP4
	1.260-1.560"	715P0FP1
	1.520-1.860"	715P0GP2

METAL HANDLE WITH CORD GRIP		
	1.250-1.375"	795P0FS1
	1.438-1.562"	795P0FS2*
	1.562-1.688"	795P0FS3*
	1.688-1.812"	795P0GS1

*May require stripping of cable jacket.

OVERSIZED METAL HANDLE WITH NPT	
 3/4"	795P0N07
1"	795P0N10
1 1/4"	795P0N12
1 1/2"	795P0N15
2"	795P0N20
2 1/2"	795P0N25

For available cord grips, see pg 231.

SANTOPRENE HANDLE		
	.708-.984"	555P0D25
	.984-1.377"	555P0D35
	1.377-1.771"	555P0D45
	1.771-1.929"	555P0D49

ANGLES

POLY ANGLE		
	30˚	515M3

METAL ANGLE			
	0˚	595M0	
	30˚	595M3	
	30˚ Oversized	795M3	Mounts on oversize box only. Order with 7T6F0N25XL. See pg 52.
	70˚	595M7	

BOXES

POLY ANGLE WITH METAL BOX WITH NPT				
 * 108.7 in^3	30˚	1 1/4"	715C3N12	* Interior volume with receptacle installed.
	30˚	1 1/2"	715C3N15	
	30˚	2"	715C3N20	
	30˚	2 1/2"	715C3N25	

METAL ANGLE WITH METAL BOX WITH NPT				
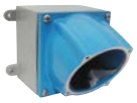 * 111.8 in^3	30˚	1 1/4"	795C3N12	* Interior volume with receptacle installed.
	30˚	1 1/2"	795C3N15	
	30˚	2"	795C3N20	
	30˚	2 1/2"	795C3N25	

METAL BOX WITH NPT			
	0˚	1 1/4"	7T5F0N12
	0˚	1 1/2"	7T5F0N15
	0˚	2"	7T5F0N20
	0˚	2 1/2"	7T5F0N25

NPT on top or bottom (if rotated). For other configurations, contact Customer Service.

MISCELLANEOUS ACCESSORIES

PROTECTIVE INLET/PLUG CAP		
	31-9A426	For Inlets/Plugs Only. Covers lockout hole for watertight seal on inlet. Consult Customer Service for availability.

PADLOCKABLE INLET/PLUG CAP		
	DS9MC	Aluminum – For Inlets/Plugs Only. -A155 suffix required on inlet part # to retain water ingress protection.

CORD GRIP WITH OPTIONS		
	see pg 231	

EASY RETROFIT ADAPTER PLATES		
	see pg 246	Mount to existing boxes.

RECEPTACLE LOCKING PIN		
	LP-843	Requires Padlockable Pawl option (-843) on receptacle.

DS200 Switch-Rated - 200 A

UL/CSA Ratings

- **Max Amperage & Voltage**
  200 A, 600 VAC
- **Switch-Rating (AC Only)**
  Branch Circuit & Motor Circuit Disconnect Switching
- **Horsepower Ratings**

208 V	3Ø	40 hp
240 V	3Ø	40 hp
480 V	3Ø	100 hp
600 V	3Ø	100 hp

- **Short Circuit Rating**
  65 kA Close & Withstand
  Testing was performed with 200 A RK5 TD fast-acting Mersen fuses. .
  10 kA Close & Withstand
  Testing was performed with 500 A RK5 time delay Mersen fuses.
- **Environmental Ratings**
  Type 4X/IP66/IP67/IP69/IP69K
- **Temperature Range**
  Min -40°F/Max 140°F
  See pg 260 for temperatures outside of this range.
- **Wiring Capacity**
  Based on THHN wire sizes.
  Min 4 AWG Max 4/0 AWG
  Aux Contacts: Prewired 14 AWG
- **Certifications**
  UL 2682, UL 1682,
  CSA C22.2 NO. 182.1, NOM

Receptacle (female)



Inlet (male)



! Remember to add installation accessories to your order

North American UL/CSA Configurations

VOLTAGE	POLARITY	PART # METAL	PART # METAL
120 V	1P+N+G	37-24165	37-28165
120 208 V	3P+N+G	37-24167	37-28167
125 V	1P+N+G	37-24075	37-28075
125 250 V	2P+N+G	37-24076	37-28076
208 V	2P+G	37-24162	37-28162
208 V	3P+G	37-24163	37-28163
250 V	2P+G	37-24072	37-28072
250 V	3P+G	37-24073	37-28073
277 V	1P+N+G	37-24045	37-28045
277 480 V	3P+N+G	37-24047	37-28047
347 600 V	3P+N+G	37-24147	37-28147
480 V	2P+G	37-24042	37-28042
480 V	3P+G	37-24043	37-28043
600 V	2P+G	37-24142	37-28142
600 V	3P+G	37-24143	37-28143

For international configurations and ratings (IEC, CE) visit meltric.com/international-catalog or contact Customer Service at 800-433-7642.

Main Options



Auxiliary/Pilot Contacts



Mushroom Pawl



Padlock Pawl



Self-Returning Lid
Recommended for cord applications to keep lid tucked in to avoid damage.

! See pages 237-246 for detailed information on these options

RECEPTACLE OPTIONS	SUFFIX #	INLET OPTIONS	SUFFIX #
With 2 Auxiliary/Pilot Contacts	**Recept # -972[7]**	With 2 Auxiliary/Pilot Contacts	**Inlet # -972[7]**
With 4 Auxiliary/Pilot Contacts	**Recept # -174[6]**	With 4 Auxiliary/Pilot Contacts	**Inlet # -174[6]**
With 6 Auxiliary/Pilot Contacts	**Recept # -976[6]**	With 6 Auxiliary/Pilot Contacts	**Inlet # -976[6]**
Straight Insertion	**Recept # -A188[2,3]**	Self-Ejecting Plug Release**	**Inlet # -338-A188[3]**
Mushroom Pawl	**Recept # -375**	For Microswitch	**Inlet # -270[3,4]**
Padlock Pawl	**Recept # -843**	Without Lockout Hole	**Inlet # -A155**
Screw-Type Locking Pawl	**Recept # -845**		
Self-Returning Lid (Manual Close)	**Recept # -NC**		
With Microswitch	**Recept # -270[3,4]**		
Electro-Mechanical Locking System	**Recept # -MIL**		

Notes:

** For self-ejecting connectors and plugs, a 443 suffix must be added to the handle part number. See pages 239-240 for more information.

[2] This option includes the Self-Returning Lid.

[3] Not UL/CSA listed.

[4] Not available on 3P+N+G configurations.

[6] This option not available with N contact.

[7] Customers needing to maintain compatibility with old style -172 auxiliary contacts should use a -172 suffix.

Order Example: 480 V DS200 + 2 auxiliary contacts
DS200 Metal inlet 3P+G = 37-28043-***972***

Handle Option Guide pgs 243-244

INSTALLATION ACCESSORIES – SIZE 6

When properly installed, all accessories meet or exceed the environmental ratings of the devices they are mounted to; unless otherwise noted.

HANDLES

HANDLE WITH NPT		PART # POLY	PART # METAL
 Poly	1"	516P0N10	596P0N10
	1 1/4"	516P0N12	596P0N12
	1 1/2"	516P0N15	596P0N15
 Metal	2"	516P0N20	596P0N20
	2 1/2"	516P0N25	596P0N25
	3"	-	596P0N30

For available cord grips, see pg 231.

POLY HANDLE WITH CORD GRIP	CABLE RANGE	PART #
	1.520-1.860"	716P0GP2
	1.850-2.190"	716P0GP3*

*May require stripping of cable jacket.

METAL HANDLE WITH CORD GRIP		
	1.688-1.812"	796P0GS1
	1.812-1.938"	796P0GS2
	1.938-2.062"	796P0JS1
	2.062-2.188"	796P0JS2
	2.188-2.312"	796P0JS3
	2.312-2.438"	796P0JS4
	2.437-2.625"	796P0KS1
	2.625-2.812"	796P0KS2

*May require stripping of cable jacket.

STRAIGHT HANDLE	CABLE RANGE	PART #	NPT	PART #
Bolt-on Clamp 	1.57-1.97"	5K6P0D50	1 1/2"	5K6P0N15L
	2.01-2.36"	5K6P0D60	2"	5K6P0N20L
NPT 	2.40-2.76"	5K6P0D70	2 1/2"	5K6P0N25L
	2.79-3.15"	5K6P0D80	3"	5K6P0N30L

OVERSIZED METAL HANDLE WITH NPT		
	1 1/2"	796P0N15
	2"	796P0N20
	2 1/2"	796P0N25
	3"	796P0N30

For available cord grips, see pg. 231.

SANTOPRENE HANDLE		
	.984-1.377"	556P0D35
	1.377-1.771"	556P0D45
	1.771-1.929"	556P0D49

ANGLES

METAL ANGLE		
	0°	596M0
	45° Oversized	796M4
	60°	596M6
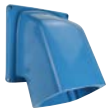	60° Extended	597M6

Mounts on oversize metal box only.

BOXES

METAL ANGLE WITH METAL BOX WITH NPT			
 * 248.4 in^3	60°	1 1/2"	796C6N15
	60°	2"	796C6N20
	60°	2 1/2"	796C6N25

* Interior volume with receptacle installed.

METAL BOX WITH NPT		
	0° 1 1/2"	7T6F0N15
	0° 2"	7T6F0N20
	0° 2 1/2"	7T6F0N25

METAL OVERSIZED BOX WITH NPT		
	0° 2"	7T6F0N20XL
	0° 2 1/2"	7T6F0N25XL
	0° 3"	7T6F0N30XL

NPT on top or bottom (if rotated). For other configurations, contact Customer Service.

MISCELLANEOUS ACCESSORIES

PROTECTIVE INLET/PLUG CAP		
	39-2A426	Covers lockout hole for watertight seal on inlet. Consult Customer Service for availability. For Inlets/Plugs Only.

PADLOCKABLE INLET/PLUG CAP		
	DS2MC	Aluminum – For Inlets/Plugs Only. -A155 suffix required on inlet part # to retain water ingress protection.

CORD GRIP WITH OPTIONS	
	see pg 231

EASY RETROFIT ADAPTER PLATES		
	see pg 246	Mount to existing boxes.

RECEPTACLE LOCKING PIN		
	LP-843	Requires Padlockable Pawl option (-843) on receptacle.

DS Spare Parts

Male Configuration

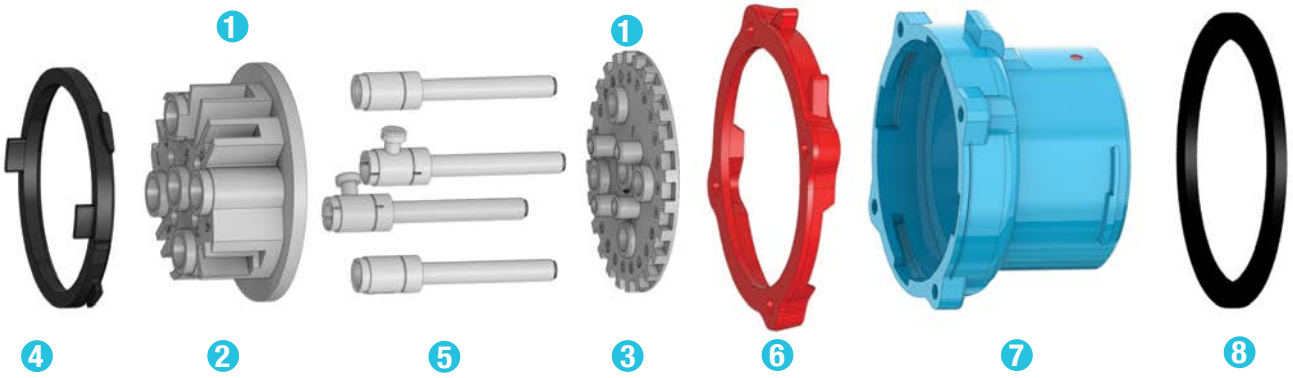

		DS20 POLY	DS30 POLY	DS60 POLY	DS60 METAL	DS100 POLY	DS100 METAL	DS200 METAL
1	Plug Insulator (Top & Bottom)	33-1A010*	33-3A010*	33-6A010*	37-6A010*	33-9A010*	37-9A010*	37-2A010*
2	Insulator Bottom	33-1A010-B	33-3A010-B	33-6A010-B	37-6A010-B	33-9A010-B	37-9A010-B	37-2A010-B
3	Insulator Top	33-1A010-T*	33-3A010-T	33-6A010-T*	37-6A010-T*	33-9A010-T*	37-9A010-T*	37-2A010-T*
4	Locking Ring	33-1A583	33-3A583	33-6A583	37-6A583	33-9A583	37-9A583	37-2A583
5	Plug Phase Contact	33-1A011	33-3A011	33-6A011	37-6A011	33-9A011	37-9A011	37-2A011
5	Plug Pilot Contact	33-1A011-972	33-3A011-972	33-6A011-972	37-6A011-972	33-9A011-972	37-9A011-972	37-2A011-972
5	Plug Ground Contact	33-1A019	33-3A019	33-6A019	37-6A019	33-9A019	37-9A019	37-2A019
6	Color-Coded Voltage Gasket	33-1AJ26	33-3AJ26	33-6AJ26	37-6AJ26	33-9AJ26	37-9AJ26	37-2AJ26
		33-1AC26	33-3AC26	33-6AC26	37-6AC26	33-9AC26	37-9AC26	37-2AC26
		33-1AB26	33-3AB26	33-6AB26	37-6AB26	33-9AB26	37-9AB26	37-2AB26
		33-1AR26	33-3AR26	33-6AR26	37-6AR26	33-9AR26	37-9AR26	37-2AR26
		33-1AN26	33-3AN26	33-6AN26	37-6AN26	33-9AN26	37-9AN26	37-2AN26
7	Plug Casing	33-1A014*	33-3A014*	33-6A014*	37-6A014*	33-9A014*	37-9A014*	37-2A014*
8	Type 4X Gasket	33-1A056	33-3A056	-	-	-	-	-

*** Please provide full part number for accurate part alignment**

Part numbers in catalog are for current revisions, others may be available upon request.

For replacement parts contact Customer Service at 800-433-7642.

Female Configuration

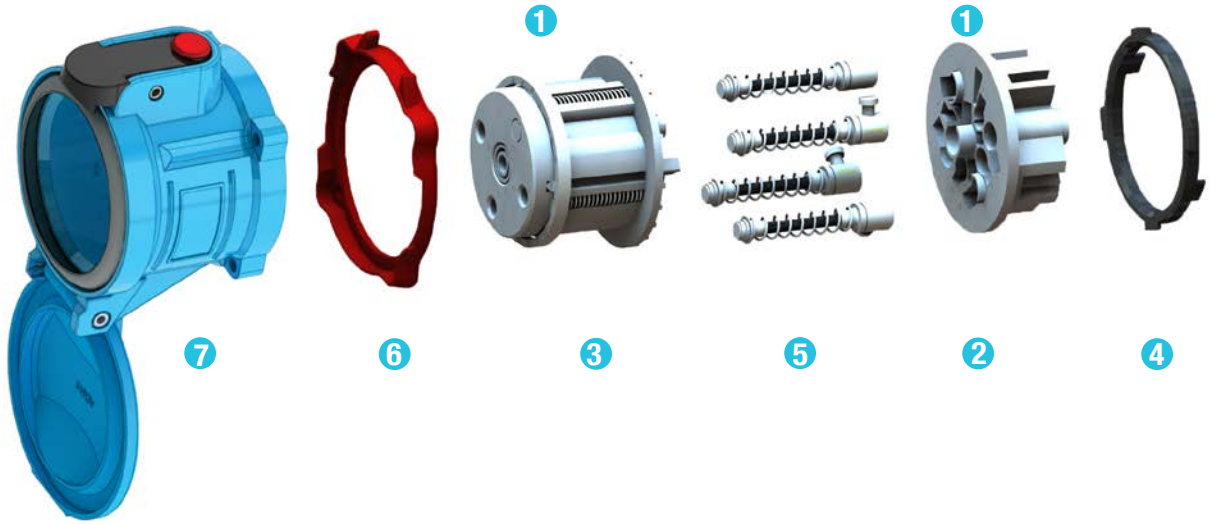

		DS20 POLY	DS30 POLY	DS60 POLY	DS60 METAL	DS100 POLY	DS100 METAL	DS200 METAL
1	Receptacle Insulator (Top & Bottom)	33-1A020*	33-3A020*	33-6A020*	37-6A020*	33-9A020*	37-9A020*	37-2A020*
2	Insulator Bottom	33-1A020-B	33-3A020-B	33-6A020-B	37-6A020-B	33-9A020-B	37-9A020-B	37-2A020-B
3	Insulator Top	33-1A020-T*	33-3A020-T*	33-6A020-T*	37-6A020-T*	33-9A020-T*	37-9A020-T*	37-2A020-T*
4	Locking Ring	33-1A583	33-3A583	33-6A583	37-6A583	33-9A583	37-9A583	37-2A583
5	Receptacle Phase Contact	33-1A021	33-3A021	33-6A021	37-6A021	33-9A021	37-9A021	37-2A021
5	Receptacle Pilot Contact	33-1A021-972	33-3A021-972	33-6A021-972	37-6A021-972	33-9A021-972	37-9A021-972	37-2A021-972
5	Receptacle Ground Contact	33-1A029	33-3A029	33-6A029	37-6A029	33-9A029	37-9A029	37-2A029
6	Color-Coded Voltage Gasket	33-1AJ26	33-3AJ26	33-6AJ26	37-6AJ26	33-9AJ26	37-9AJ26	37-2AJ26
		33-1AC26	33-3AC26	33-6AC26	37-6AC26	33-9AC26	37-9AC26	37-2AC26
		33-1AB26	33-3AB26	33-6AB26	37-6AB26	33-9AB26	37-9AB26	37-2AB26
		33-1AR26	33-3AR26	33-6AR26	37-6AR26	33-9AR26	37-9AR26	37-2AR26
		33-1AN26	33-3AN26	33-6AN26	37-6AN26	33-9AN26	37-9AN26	37-2AN26
7	Receptacle Casing (as shown)	33-1A024*	33-3A024*	33-6A024*	37-6A024*	33-9A024*	37-9A024*	37-2A024*
	Lid Replacement Kit	33-1A125	33-3A125	33-6A125	37-6A925	33-9A125	37-9A925	37-2A925
	Pawl Replacement Kit Polyester	33-1A824	33-3A824	33-6A824	-	33-9A824	-	-
	Pawl Replacement Kit Metal	33-1A924	33-3A924	33-6A924	37-6A824	33-9A924	37-9A824	37-2A824
	Drawbar Replacement Kit	-	-	-	-	33-9A726	37-9A726	37-2A726

*** Please provide full part number for accurate part alignment**

Part numbers in catalog are for current revisions, others may be available upon request.

For replacement parts contact Customer Service at 800-433-7642.

DS DIMENSIONS – Provided in Inches

SCAN ME >>

Dimensions are for reference only and may change depending on accessories used. For precise dimensions contact MELTRIC Engineering.

Plug

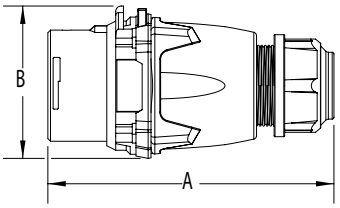

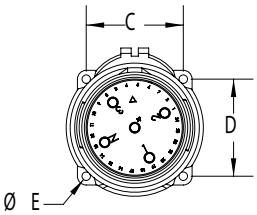

Inlet

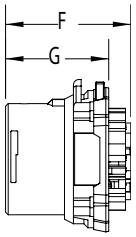

PRODUCT	A	B	C	D	øE	F	G
DS20	5.72	2.79	1.89	1.89	0.20	2.28	1.86
DS30	6.15	3.23	2.17	2.17	0.20	2.93	2.07
DS60/DS7c	6.70	3.77	2.59	2.59	0.24	3.42	2.38
DS100	8.33	4.59	3.20	3.20	0.24	4.14	3.04
DS200	10.30	5.67	3.86	3.86	0.26	4.66	3.20

Connector

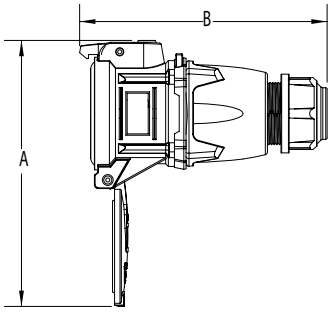

Receptacle

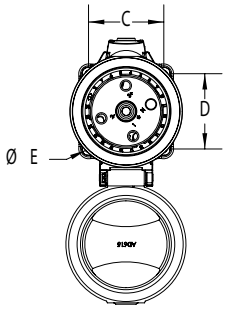

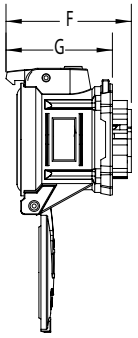

Extended Drawbars

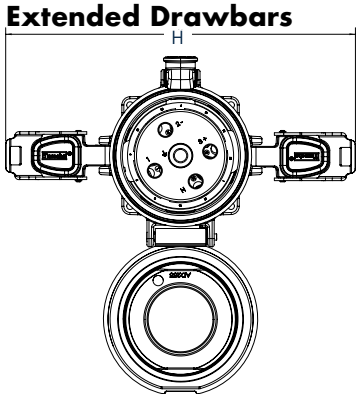

PRODUCT	A	B	C	D	øE	F	G	H
DS20	6.32	6.38	1.89	1.89	0.20	3.3	2.6	N/A
DS30	7.16	6.93	2.17	2.17	0.20	3.73	2.87	N/A
DS60/DS7c	8.96	7.75	2.59	2.59	0.22	4.53	3.37	N/A
DS100	11.80	10.02	3.20	3.20	0.23	5.71	4.74	12.62
DS200	12.70	10.87	3.86	3.86	0.26	6.21	4.75	13.37

Box/30° Angle/ Receptacle/Plug

Dimensions for DR200 include 60° angle.

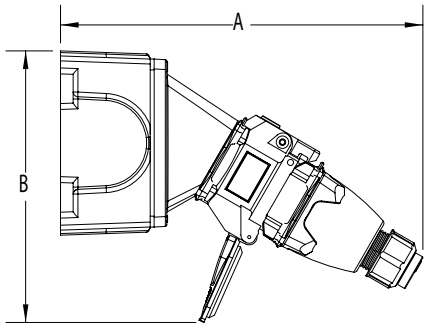

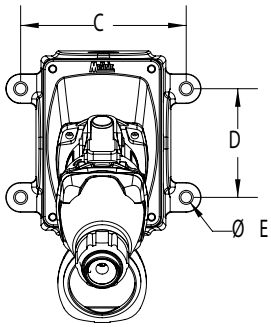

PRODUCT	A	B	C	D	øE
DS20	9.84	7.29	4.19	2.75	0.27
DS30	10.30	8.39	4.19	2.75	0.27
DS60/DS7c	11.87	10.74	5	3.81	0.33
DS100	16.06	11.77	6.75	4.25	0.31
DS200	15.76	12.70	8.13	6.38	0.31

30° Angle/Receptacle/Plug

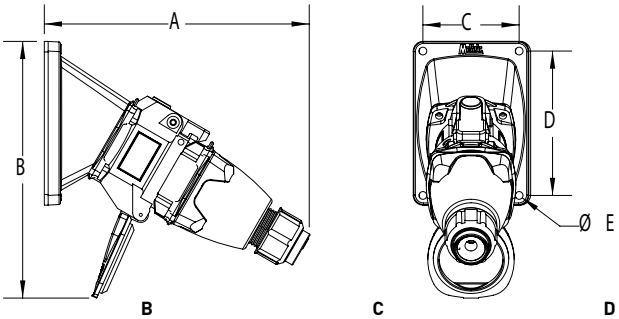

PRODUCT	A	B	C	D	øE
DS20	7.60	7.87	2.50	3.75	0.22
DS30	8.19	8.44	2.50	3.75	0.22
DS60/DS7c	9.17	10.45	3.43	4.83	0.26
DS100	14.09	12.05	4.83	4.83	0.28
DS200	11.61	16.20	6.50	6.50	0.25

70° Wall Box/Receptacle

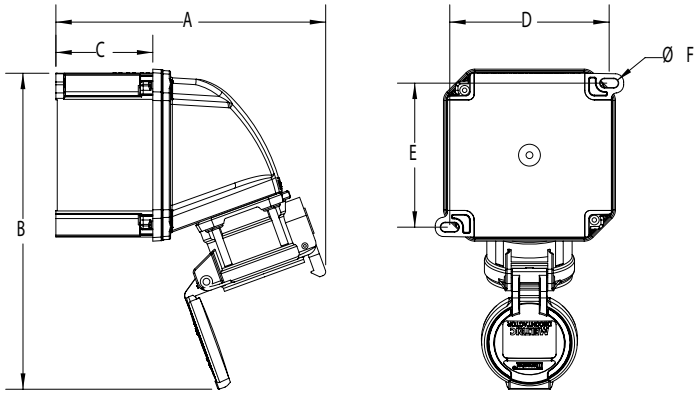

PRODUCT	A	B	C	D	E	øF
DS20	7.78	9.11	2.80	4.60	4.15	0.26
DS30*	8.91	11.55	2.80	6.17	5.73	0.26
DS60/DS7c*	9.07	12.24	2.80	6.17	5.73	0.26

* Box has 4 mounting feet.

Plug/Connector

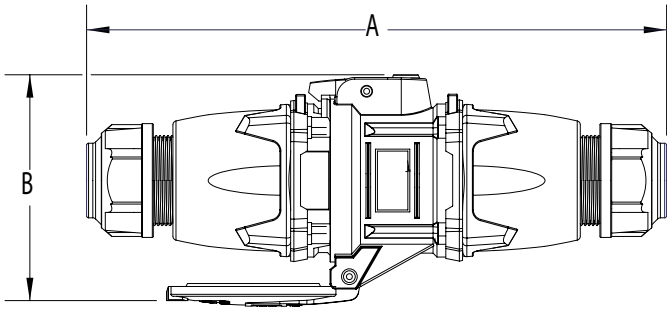

PRODUCT	A	B
DS20	10.20	4.61
DS30	10.91	5.71
DS60/DS7c	12.17	6.57
DS100	19.53	8.03
DS200	23.15	8.00



MULTIPIN
Plugs & Receptacles

SCAN ME >>

MELTRIC offers a broad range of multipin devices for use in a wide variety of control and power applications. Each device features MELTRIC spring-loaded, silver-nickel, butt-style contact technology that maximizes durability and performance. Multipin devices are available with as many as 37 or as few as 4 contacts. Products range from 8 A up to 50 A per contact and some include current interruption and/or horsepower ratings.



PN7c COMPACT 5 TO 7 PIN CONNECTORS P. 61

- Up to 15 A per contact
- IP66/IP67
- Poly or metal casings



PN12c COMPACT 12 PIN CONNECTORS P. 63

- Up to 15 A per contact
- IP54/55 (SS), IP66/IP67 (Poly & Metal)
- Poly or metal casings



DSN12c POLY CONNECTORS UP TO 12 PINS P. 65

- Up to 15 A per contact
- IP66/IP67/IP69/IP69K
- Crimp or solder terminals



DSN24c/DS24c CONNECTORS UP TO 24 PINS P. 67

- Up to 10 A per contact
- IP54/55 (SS), Type 4X/IP66/IP67 (Poly)
- Crimp or solder terminals



DSN37c/DS37c CONNECTORS UP TO 37 PINS P. 69

- Up to 8 A per contact
- IP54/55 (SS), Type 4X/IP66/IP67 (Poly)
- Crimp or solder terminals



DN9c HP RATED CONNECTORS - 9 PINS P. 71

- Up to 5 hp @ 480 VAC or 20 A per contact
- Multiple power or control circuits
- Metal casings



DN20c HP RATED CONNECTORS - 20 PINS P. 73

- Up to 3 hp @ 480 VAC or 15 A per contact
- Multiple power or control circuits
- Metal casings



DS7c/DR7c HIGHER AMP 4 TO 7 PIN CONNECTOR P. 75

DS7c

- Up to 30 A per contact and 3 auxiliary contacts
- Suitable for current interrupting

DR7c

- Up to 50 A per contact and 3 auxiliary contacts
- Non-current interrupting

MULTIPIN CONTACTS

MELTRIC Multipin devices are available with either crimp/solder or screw type terminals. Each offers different advantages for different applications.

Crimp/Solder Terminals

PN12c | DSN12c | DSN24c | DS24c | DSN37c | DS37c

Crimp/solder terminals offer a space efficient, easy to work with termination solution. Crimping or soldering of the termination is completed before insertion into the device. This allows the installer ample space and access to terminals during installation.

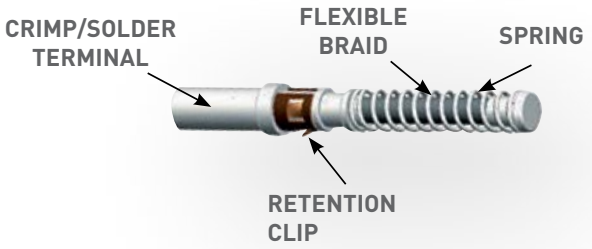

After terminating the contact, simply insert it by pushing the contact into the back side of the interior insulator until it reaches a positive stop. The contact may be inserted and removed up to three times for future rewiring.

ECONOMIC AND TECHNICAL ADVANTAGES

Crimping ensures an economical and sustainable solution through installation time saving and quality of connection.

- No need for soldering performance qualifications.
- High resistance to vibrations.
- Handling more than 5000 operations: a high durability and quality of connection guaranteed.

FAST WIRING

- Cable conductors: 18 AWG to 14 AWG
- Before wiring, equip each conductor with a heat-shrink sleeve.
- After wiring, cover the terminal portion of the contact with the sleeve.
- Crimp the contact with a KNIPEX crimping tool Part # 61CA500 or a GREENLEE crimping tool Part # 45505.
- Perform a double crimping in compliance with the instructions.
- Terminals can also be soldered.

Screw Terminals

PN7c | DN9c | DN20c | DS7c | DR7c

MELTRIC screw terminals have a patented, spring-assisted design that provides permanent and secure conductor connections for the **PN7c, DS7c,** and **DR7c.** The patented spring ring design ensures constant pressure against the terminal and conductor.
This keeps the terminal screw securely in place and helps to compensate for strand settlement and conductor yield.

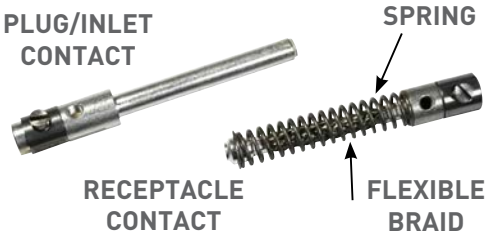

CRIMPING CONTACTS - SIMPLE ASSEMBLY AND DISASSEMBLY

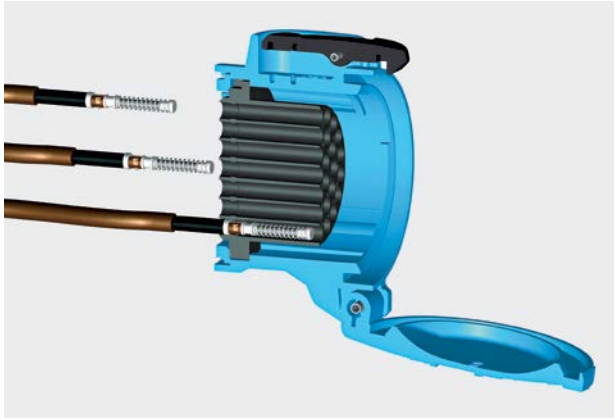



Assembly
To insert contacts when they have been wired is simple.
Push wired contact into rear of insulator until it stops to complete the installation.

Disassembly
To remove, use the tool provided.
Push tool from front onto contact until tool stops.
Contact is then released at rear of insulator.

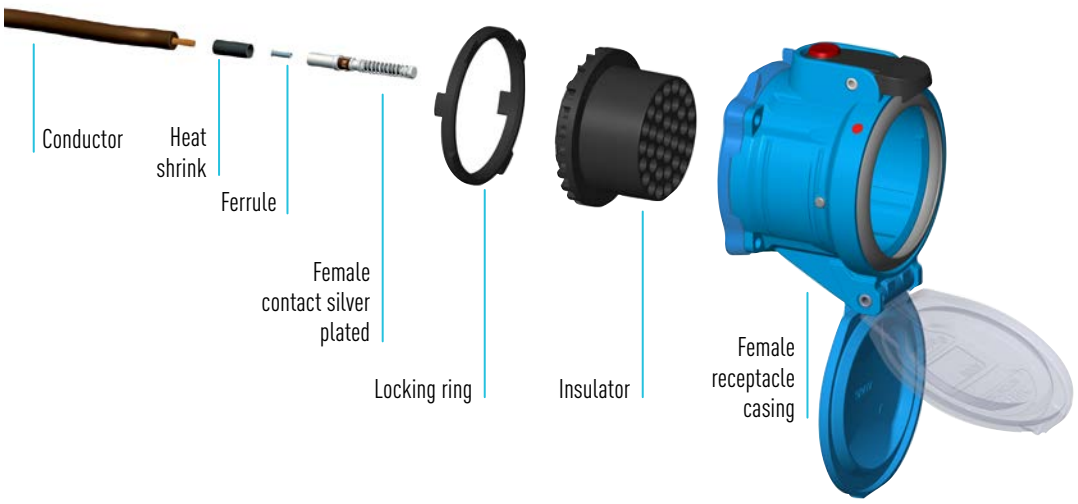



PN7c Multipin - 15 A

Ratings

- **Max Amperage & Voltage**
  480 VAC Max/130 VDC
- **Amperage Rating**
  15 A Current Interrupting (AC only)
- **Environmental Ratings**
  IP66/IP67 (Poly & Metal)
  Type 3R/IP54/IP55 (Stainless Steel)
- **Temperature Range**
  Min -40°F/Max 140°F
  See pg 260 for temperatures outside of this range.
- **Wiring Capacity**
  Based on THHN wire sizes.
  Min 18 AWG Max 10 AWG
- **Certifications**
  UL*, CSA*, NOM
  * Does not apply to stainless steel version.

See pgs. 111-112 for PN7c dimensions.

! Remember to add installation accessories to your order

Receptacle (female)



Inlet (male)



North American UL/CSA Configurations

NOTE: Poly devices should not be inter-mated with metal devices

VOLTAGE	POLARITY	PART #			PART #		
		POLY	METAL	STAINLESS STEEL	POLY	METAL	STAINLESS STEEL
480 V	4P+G	03-P4041	07-P4041	07-04041-SS	03-P8041	07-P8041	07-08041-SS
480 V	5P+G	03-P4051	07-P4051	07-04051-SS	03-P8051	07-P8051	07-08051-SS
480 V	6P+G	03-P4061	07-P4061	07-04061-SS	03-P8061	07-P8061	07-08061-SS

For international configurations and ratings (IEC, CE) visit meltric.com/international-catalog or contact Customer Service at 800-433-7642.

Main Options



Reverse Interiors



Flush Mount (replaces female casing)



Locking Pawl

RECEPTACLE OPTIONS	SUFFIX #	INLET OPTIONS	SUFFIX #
Reverse Interiors	**Recept # -001**	Reverse Interiors	**Inlet # -001**
With Flush Mount (poly only)	**Recept # -142**[8]		
Locking Pawl (poly/metal only)	**Recept # -824-300**		
Self-Returning Lid (Manual Close)	**Recept # -NC**		

[8] IP55 rating with Flush Mount casing.

! See pages 237-246 for detailed information on these options

Order Example: 480 V PN7c + Reverse Interiors
PN7c Receptacle 5P+G = 03-P4051***-001***

Handle Option Guide pgs 243-244

INSTALLATION ACCESSORIES – SIZE 1

When properly installed, all accessories meet or exceed the environmental ratings of the devices they are mounted to; unless otherwise noted.

HANDLES

HANDLE WITH NPT		PART # POLY	PART # METAL
 Poly / Metal	1/2"	511P0N05	791P0N05L
	3/4"	511P0N07	791P0N07L
	1"	511P0N10	791P0N10L

For available cord grips, see pg 231.

POLY HANDLE WITH CORD GRIP	CABLE RANGE	PART #
	.350-.520"	711P0BP6
	.520-.680"	711P0CP5
	.680-.980"	711P0DP4

METAL HANDLE WITH CORD GRIP		
	.438-.500"	791P0BS3L
	.500-.562"	791P0BS4L
	.562-.625"	791P0CS1L
	.625-.750"	791P0CS4L
	.750-.875"	791P0DS1L
	.875-1.000"	791P0DS3L

POLY 90° HANDLE WITH NPT		
	1/2"	751P9N05
	3/4"	751P9N07
	1"	751P9N10

STAINLESS STEEL HANDLE WITH NPT		
 For Stainless Steel devices only.	1/2"	7X1P0N05
	3/4"	7X1P0N07

For 1/2" size, a hole size reducer is utilized.

POLY HANDLE		
	.350-.700"	511P0D18

POLY ANGLED HANDLE		
	.354-.708"	511P6D18

ANGLES

POLY ANGLE				
	MB Box 30°	511M3	 70°	511M7

METAL ANGLE			
	0°	591M0	
	FS/FD 30°	791M3FS	Base measures approximately 4.2" x 2.7". Due to the variation in sizes of FS boxes, please verify that your FS box matches our dimensions, if not call Customer Service for other solutions.
	45°	591M4	

STAINLESS STEEL ANGLE			
	30°	7X1M3	For Stainless Steel devices only.

BOXES

POLY CONDUIT ENTRY WITH NPT				
 * 7.0 in³	30°	1/2"	511B3N05	* Interior volume with receptacle installed.
	30°	3/4"	511B3N07	

POLY WALL BOX WITH NPT				
 * 3.4 in³	0°	1/2"	511B0N05	* Interior volume with receptacle installed.
	0°	3/4"	511B0N07	

METAL WALL BOX WITH NPT				
 * 3.8 in³	0°	1/2"	591B0N05	* Interior volume with receptacle installed.
	0°	3/4"	591B0N07	

POLY WALL BOX WITH ANGLE			
 * 82.0 in³	70°	511C7000	70° poly boxes are not drilled. * Interior volume with receptacle installed.
	Ground Bar	51AA089	

METAL BOX WITH NPT			
	0°	1/2"	7T1F0N05
	0°	3/4"	7T1F0N07
	0°	1"	7T1F0N10
	0°	1 1/4"	7T1F0N12

POLY ANGLE WITH METAL BOX WITH NPT				
 * 30.0 in³	30°	1/2"	711C3N05	* Interior volume with receptacle installed.
	30°	3/4"	711C3N07	
	30°	1"	711C3N10	
	30°	1 1/4"	711C3N12	

METAL ANGLE WITH METAL BOX WITH NPT				
 * 27.0 in³	45°	1/2"	791C4N05	
	45°	3/4"	791C4N07	
	45°	1"	791C4N10	
	45°	1 1/4"	791C4N12	

STAINLESS STEEL BOX WITH STAINLESS STEEL ANGLE WITH NPT				
	30°	3/4"	7X1C3N07	Includes angle adapter as shown. For Stainless Steel devices only.
	30°	1"	7X1C3N10	

NPT on top or bottom (if rotated). For other configurations, contact Customer Service.

MISCELLANEOUS ACCESSORIES

PROTECTIVE INLET/PLUG CAP		
	01-NA426	For Inlets/Plugs Only.

FLUSH MOUNT	
	01-2A142

CORD GRIP WITH OPTIONS	
	see pg 231

PN12c Multipin - 15 A

Ratings

- **Voltage**
  480 VAC Max / 480 VDC
- **Amperage Rating**
  15 A Non-Current Interrupting
- **Environmental Ratings**
  Type 4X/IP66/IP67 (Poly & Metal)
  Type 3R/IP54/IP55 (Stainless Steel)
- **Temperature Range**
  Min -40°F/Max 140°F
  See pg 260 for temperatures outside of this range.
- **Wiring Capacity**
  Based on THHN wire sizes.
  Min 18 AWG Max 14 AWG
- **Certifications**
  UL 2238, NOM

See pgs. 111-112 for PN12c dimensions

! Remember to add installation accessories to your order

Receptacle (female)



Inlet (male)



North American UL/CSA Configurations

NOTE: Poly devices should not be inter-mated with metal devices

VOLTAGE	POLARITY	PART #			PART #		
		POLY	METAL	STAINLESS STEEL	POLY	METAL	STAINLESS STEEL
480 V	11P+G	03-A4001	07-A4001	07-A4001-SS	03-A8001	07-A8001	07-A8001-SS

For international configurations and ratings (IEC, CE) visit meltric.com/international-catalog or contact Customer Service at 800-433-7642.

Main Options



Reverse Interiors



Flush Mount (replaces female casing)



Locking Pawl

RECEPTACLE OPTIONS	SUFFIX #	INLET OPTIONS	SUFFIX #
Reverse Interiors	**Recept # -001**	Reverse Interiors	**Inlet # -001**
With Flush Mount (poly only)	**Recept # -142**[8]		
Locking Pawl	**Recept # -824-300**		
Self-Returning Lid (Manual Close)	**Recept # -NC**		

[8] IP55 rating with Flush Mount casing.

! See pages 237-246 for detailed information on these options

Order Example: 480 V PN12c + Reverse Interiors
PN12c Receptacle 11P+G = 03-A4001-***001***

Handle Option Guide pgs 243-244

INSTALLATION ACCESSORIES – SIZE 1

When properly installed, all accessories meet or exceed the environmental ratings of the devices they are mounted to; unless otherwise noted.

HANDLES

HANDLE WITH NPT		PART # POLY	PART # METAL
 Poly / Metal	1/2"	511P0N05	791P0N05L
	3/4"	511P0N07	791P0N07L
	1"	511P0N10	791P0N10L

For available cord grips, see pg 231.

POLY HANDLE WITH CORD GRIP	CABLE RANGE	PART #
	.350-.520"	711P0BP6
	.520-.680"	711P0CP5
	.680-.980"	711P0DP4

METAL HANDLE WITH CORD GRIP		
	.438-.500"	791P0BS3L
	.500-.562"	791P0BS4L
	.562-.625"	791P0CS1L
	.625-.750"	791P0CS4L
	.750-.875"	791P0DS1L
	.875-1.000"	791P0DS3L

POLY 90° HANDLE WITH NPT		
	1/2"	751P9N05
	3/4"	751P9N07
	1"	751P9N10

STAINLESS STEEL HANDLE WITH CORD GRIP		
 For Stainless Steel devices only.	.438-.500"	7X1P0BS3
	.500-.562"	7X1P0BS4
	.562-.625"	7X1P0CS1
	.625-.750"	7X1P0CS4
	.750-.875"	7X1P0DS1
	.875-1.000"	7X1P0DS2

POLY HANDLE		
	.350-.700"	511P0D18

POLY ANGLED HANDLE		
	.354-.708"	511P6D18

ANGLES

POLY ANGLE				
	MB Box 30°	511M3	 70°	511M7 Panel mounting only.

METAL ANGLE				
	0°	591M0	 45°	591M4
	FS/FD Box 30°	791M3FS		

Base measures approximately 4.2" x 2.7". Due to the variation in sizes of FS boxes, please verify that your FS box matches our dimensions, if not call Customer Service for other solutions.

STAINLESS STEEL ANGLE			
	30°	7X1M3	For Stainless Steel devices only.

BOXES

POLY CONDUIT ENTRY WITH NPT			PART #	
 * 7.0 in³	30°	1/2"	511B3N05	* Interior volume with receptacle installed.
	30°	3/4"	511B3N07	

POLY WALL BOX WITH NPT				
 * 3.4 in³	0°	1/2"	511B0N05	* Interior volume with receptacle installed.
	0°	3/4"	511B0N07	

METAL WALL BOX WITH NPT				
 * 3.8 in³	0°	1/2"	591B0N05	* Interior volume with receptacle installed.
	0°	3/4"	591B0N07	

POLY WALL BOX WITH ANGLE				
 * 82.0 in³	70°		511C7000	70° poly boxes are not drilled. * Interior volume with receptacle installed.
		Ground Bar	51AA089	

METAL BOX WITH NPT			
	0°	1/2"	7T1F0N05
	0°	3/4"	7T1F0N07
	0°	1"	7T1F0N10
	0°	1 1/4"	7T1F0N12

POLY ANGLE WITH METAL BOX WITH NPT				
 * 30.0 in³	30°	1/2"	711C3N05	* Interior volume with receptacle installed.
	30°	3/4"	711C3N07	
	30°	1"	711C3N10	
	30°	1 1/4"	711C3N12	

METAL ANGLE WITH METAL BOX WITH NPT				
 * 27.0 in³	45°	1/2"	791C4N05	* Interior volume with receptacle installed.
	45°	3/4"	791C4N07	
	45°	1"	791C4N10	
	45°	1 1/4"	791C4N12	

STAINLESS STEEL BOX WITH STAINLESS STEEL ANGLE WITH NPT				
	30°	3/4"	7X1C3N07	Includes angle adapter as shown. For Stainless Steel devices only.
	30°	1"	7X1C3N10	

MISCELLANEOUS ACCESSORIES

PROTECTIVE INLET/PLUG CAP		
	01-NA426	For Inlets/Plugs Only.

FLUSH MOUNT	
	01-2A142

CORD GRIP WITH OPTIONS	
	see pg 231

MULTI-CONTACT REMOVAL TOOL	
	61-CA593

CRIMPER TOOL (GREENLEE OR EQUAL)	
	4CN30

EUROPEAN CRIMPING TOOL	
	61CA500

DSN12c Multipin - 15 A

Ratings

- **Voltage**
  480 VAC Max/480 VDC
- **Amperage Rating**
  15 A Non-Current Interrupting
- **Environmental Ratings**
  Type 4X/IP66/IP67/IP69/IP69K
- **Temperature Range**
  Min -40°F/Max 140°F
  See pg 260 for temperatures outside of this range.
- **Wiring Capacity**
  Based on THHN wire sizes.
  Min 18 AWG Max 14 AWG
- **Certifications**
  UL 2238, NOM

See pg 39-40 for DSN12c dimensions.

Receptacle (female)



Inlet (male)



! Remember to add installation accessories to your order

North American Configurations

VOLTAGE	POLARITY	PART # POLY	PART # POLY
480 V	11P+G	63-A4001	63-A8001

Main Options



Padlock Pawl



Mushroom Pawl

RECEPTACLE OPTIONS	SUFFIX #
Straight Insertion	**Recept # -352**[5]
Mushroom Pawl	**Recept # -375**
Padlock Pawl	**Recept # -843**
Self-Returning Lid (Manual Close)	**Recept # -NC**

Notes:

[5]This option includes the Self-Returning Lid.

! See pages 237-246 for detailed information on these options

Order Example: 480 V DSN12c + mushroom pawl
DSN12c 11P+G Receptacle = 63-A4001***-375***

Handle Option Guide pgs 243-244

INSTALLATION ACCESSORIES – SIZE 1

When properly installed, all accessories meet or exceed the environmental ratings of the devices they are mounted to; unless otherwise noted.

HANDLES

HANDLE WITH NPT		PART # POLY	PART # METAL
 Poly	1/2"	511P0N05	791P0N05L
	3/4"	511P0N07	791P0N07L
 Metal	1"	511P0N10	791P0N10L

For available cord grips, see pg 231.

POLY HANDLE WITH CORD GRIP	CABLE RANGE	PART #
	.350-.520"	711P0BP6
	.520-.680"	711P0CP5
	.680-.980"	711P0DP4

METAL HANDLE WITH CORD GRIP		
	.438-.500"	791P0BS3L
	.500-.562"	791P0BS4L
	.562-.625"	791P0CS1L
	.625-.750"	791P0CS4L

POLY HANDLE		
	.350-.700"	511P0D18

POLY EXTENDED HANDLE		
	.200-.820"	511P0D21

POLY ANGLED HANDLE		
	.354-.708"	511P6D18

BOXES

POLY CONDUIT ENTRY WITH NPT			PART #	
 * 6.7 in^3	30°	1/2"	511B3N05	* Interior volume with receptacle installed.
	30°	3/4"	511B3N07	

POLY WALL BOX WITH ANGLE				
 * 82.0 in^3	70°		511C7000	70° poly boxes are not drilled. * Interior volume with receptacle installed.
		Ground Bar	51AA089	

POLY ANGLE WITH METAL BOX WITH NPT			
 * 74.6 in^3	70°	1/2"	711C7N05
	70°	3/4"	711C7N07
	70°	1"	711C7N10
	70°	1 1/4"	711C7N12
	70°	1 1/2"	711C7N15

* Interior volume with receptacle installed.

METAL BOX WITH NPT			
	0°	1/2"	7T1F0N05
	0°	3/4"	7T1F0N07
	0°	1"	7T1F0N10
	0°	1 1/4"	7T1F0N12

POLY ANGLE WITH METAL BOX WITH NPT				
 * 29.8 in^3	30°	1/2"	711C3N05	* Interior volume with receptacle installed.
	30°	3/4"	711C3N07	
	30°	1"	711C3N10	
	30°	1 1/4"	711C3N12	

NPT on top or bottom (if rotated). For other configurations, contact Customer Service.

ANGLES

POLY ANGLE			
	MB Box 30°	511M3	
	70°	511M7	Panel mounting only.

METAL ANGLE			
	0°	591M0	
	FS/FD Box 30°	791M3FS	Base measures approximately 4.2" x 2.7". Due to the variation in sizes of FS boxes, please verify that your FS box matches our dimensions, if not call Customer Service for other solutions.
	45°	591M4	

MISCELLANEOUS ACCESSORIES

FINGER DRAWPLATES		
	61-1A346	Set of Two (2) Recommended for cord to cord assembly applications, for facilitated mating.

PROTECTIVE INLET/PLUG CAP		
	61-1A426	For Inlets/Plugs Only.

PADLOCKABLE INLET/PLUG CAP		
	61-1A826	For Inlets/Plugs Only.

MULTI-CONTACT REMOVAL TOOL	
	61-CA593

CRIMPER TOOL (GREENLEE OR EQUAL)	
	4CN30

EUROPEAN CRIMPING TOOL	
	61CA500

RECEPTACLE LOCKING PIN		
	LP-843	Requires Padlockable Pawl option (-843) on receptacle.

DSN24c/DS24c Multipin 10 A

Ratings

- **Voltage**
  DSN24c
  480 VAC Max/480 VDC
  DS24c
  250 VAC Max/250 VDC
- **Amperage Rating**
  10 A Non-Current Interrupting
- **Environmental Ratings**
  Type 4X/IP66/IP67/IP69/IP69K (Poly)
  Type 3R/IP54/IP55 (Stainless Steel)
- **Temperature Range**
  Min -40°F/Max 140°F
  See pg 260 for temperatures outside of this range.
- **Wiring Capacity**
  Based on THHN wire sizes.
  Min 18 AWG Max 14 AWG
- **Certifications**
  UL 2238, NOM

See pg 39-40 for DSN24c dimensions.

Receptacle (female) **Inlet** (male)



! Remember to add installation accessories to your order

North American Configurations

VOLTAGE	POLARITY	PART #		PART #	
		POLY	STAINLESS STEEL	POLY	STAINLESS STEEL
250 V	23P+G	-	37-B4002-SS	-	37-B8002-SS
480 V	23P+G	63-B4002	-	63-B8002	-

For international configurations and ratings (IEC, CE) visit meltric.com/international-catalog or contact Customer Service at 800-433-7642.

Main Options



Padlock Pawl



Mushroom Pawl

Poly Devices Only

RECEPTACLE OPTIONS	SUFFIX #
Straight Insertion	**Recept # -352**[2]
Mushroom Pawl	**Recept # -375**
Padlock Pawl	**Recept # -843**
Self-Returning Lid (Manual Close)	**Recept # -NC**

Notes:
[2] This option includes the Self-Returning Lid.

! See pages 237-246 for detailed information on these options

Order Example: 480 V DSN24c + mushroom pawl
DSN24c 22P Poly receptacle = 63-B4002***-375***

Handle Option Guide pgs 243-244

INSTALLATION ACCESSORIES – SIZE 2

When properly installed, all accessories meet or exceed the environmental ratings of the devices they are mounted to; unless otherwise noted.

HANDLES

HANDLE WITH NPT		PART # POLY WITH DRAWPLATES	PART # POLY	PART # METAL
NEW Poly with drawplates	1/2"	512P0N05	512P0N05E2615	592P0N05
	3/4"	512P0N07	512P0N07E2615	592P0N07
	1"	512P0N10	512P0N10E2615	592P0N10
Poly	1 1/4"	512P0N12	512P0N12E2615	-
Metal				

For available cord grips, see pg 231.

POLY HANDLE WITH CORD GRIP	CABLE RANGE	PART # WITH DRAWPLATES	PART #
NEW with drawplates	.350-.520"	712P0BP6	712P0BP6E2615
	.520-.680"	712P0CP5	712P0CP5E2615
	.680-.980"	712P0DP4	712P0DP4E2615
	.980-1.260"	712P0EP4	712P0EP4E2615

METAL HANDLE WITH CORD GRIP		
.438-.500"	792P0BS3	
.500-.562"	792P0BS4	
.562-.625"	792P0CS2	
.625-.750"	792P0CS4	
.770-.875"	792P0DS1	
.870-1.000"	792P0DS3	

POLY HANDLE		
.200-.820"	512P0D21	

POLY HANDLE WITH CLAMP & BUSHING		
.750-.875"	712P0S14	
.875-1.000"	712P0S16	
1.000-1.125"	712P0S18	
1.125-1.250"	712P0S20	
1.250-1.375"	712P0S22	

STAINLESS STEEL HANDLE WITH CORD GRIP		
.562-.625"	7X2P0CS2	
.625-.750"	7X2P0CS4	
.750-.875"	7X2P0DS1	
.875-1.000"	7X2P0DS2	

For Stainless Steel devices only.

ANGLES

POLY ANGLE				
30°	512M3	70°	512M7	Panel mounting only.

METAL ANGLE				
0°	592M0	30°	592M3	
FS/FD Box 30°	792M3FS			

Base measures approximately 4.2" x 2.7". Due to the variation in sizes of FS boxes, please verify that your FS box matches our dimensions, if not call Customer Service for other solutions.

STAINLESS STEEL ANGLE		
30°	7X2M3	

BOXES

POLY CONDUIT ENTRY WITH NPT			
* 8.5 in³	30°	1/2"	512B3N05
	30°	3/4"	512B3N07

For poly devices only.
* Interior volume with receptacle installed.

POLY WALL BOX WITH ANGLE			
* 82.0 in³	70°		512C7000
		Ground Bar	51AA089

70° poly boxes are not drilled.
* Interior volume with receptacle installed.

POLY ANGLE WITH METAL BOX WITH NPT			
* 74.6 in³	70°	1/2"	712C7N05
	70°	3/4"	712C7N07
	70°	1"	712C7N10
	70°	1 1/4"	712C7N12
	70°	1 1/2"	712C7N15

* Interior volume with receptacle installed.

METAL BOX WITH NPT			
	0°	1/2"	7T1F0N05
	0°	3/4"	7T1F0N07
	0°	1"	7T1F0N10
	0°	1 1/4"	7T1F0N12

POLY ANGLE WITH METAL BOX WITH NPT			
* 30.2 in³	30°	1/2"	712C3N05
	30°	3/4"	712C3N07
	30°	1"	712C3N10
	30°	1 1/4"	712C3N12

For metal angle, replace "71" prefix with "79".
* Interior volume with receptacle installed.

STAINLESS STEEL BOX WITH NPT			
	0°	1"	7X1F0N10

For Stainless Steel devices only.

STAINLESS STEEL ANGLE WITH STAINLESS STEEL BOX WITH NPT			
	30°	3/4"	7X2C3N07
	30°	1"	7X2C3N10

For Stainless Steel devices only.

MISCELLANEOUS ACCESSORIES

FINGER DRAWPLATES		
61-3A346	Set of Two (2) Recommended for cord to cord assembly applications, for facilitated mating.	Poly Devices Only

PROTECTIVE INLET/PLUG CAP		
61-3A426	For Inlets/Plugs Only.	

PADLOCKABLE INLET/PLUG CAP		
61-3A826	For Inlets/Plugs Only.	

MULTI-CONTACT REMOVAL TOOL	
61-CA593	

CRIMPER TOOL (GREENLEE OR EQUAL)	
4CN30	

EUROPEAN CRIMPING TOOL	
61CA500	

RECEPTACLE LOCKING PIN		
LP-843	Requires Padlockable Pawl option (-843) on receptacle.	

DSN37c/DS37c Multipin 8A

Ratings

- **Voltage**
  480 VAC Max/480 VDC
- **Amperage Rating**
  8 A Non-Current Interrupting
- **Environmental Ratings**
  Type 4X/IP66/IP67/IP69/IP69K (Poly)
  Type 3R/IP54/IP55 (Stainless Steel)
- **Temperature Range**
  Min -40°F/Max 140°F
  See pg 260 for temperatures outside of this range.
- **Wiring Capacity**
  Based on THHN wire sizes.
  Min 18 AWG Max 14 AWG
- **Certifications**
  UL 2238, NOM

See pg 39-40 for DSN37c dimensions.

Receptacle (female)



Inlet (male)



! Remember to add installation accessories to your order

North American Configurations

VOLTAGE	POLARITY	PART # POLY	PART # STAINLESS STEEL	PART # POLY	PART # STAINLESS STEEL
480 V	36P+G	63-C4003	37-C4003-SS	63-C8003	37-C8003-SS

For international configurations and ratings (IEC, CE) visit meltric.com/international-catalog or contact Customer Service at 800-433-7642.

Main Options



Padlock Pawl



Mushroom Pawl

Poly Devices Only

RECEPTACLE OPTIONS	SUFFIX #
Straight Insertion	**Recept # -352**[2]
Mushroom Pawl	**Recept # -375**
Padlock Pawl	**Recept # -843**
Self-Returning Lid (Manual Close)	**Recept # -NC**

Notes:

[2] This option includes the Self-Returning Lid.

! See pages 237-246 for detailed information on these options

Order Example: 480 V DSN37 + mushroom pawl
DSN37c 32P Poly receptacle = 63-C4003***-375***

Handle Option Guide pgs 243-244

INSTALLATION ACCESSORIES – SIZE 3

When properly installed, all accessories meet or exceed the environmental ratings of the devices they are mounted to; unless otherwise noted.

HANDLES

HANDLE WITH NPT		PART # POLY	PART # METAL
 Poly / Metal	1/2"	513P0N05	593P0N05
	3/4"	513P0N07	593P0N07
	1"	513P0N10	593P0N10
	1 1/4"	513P0N12	593P0N12

For available cord grips, see pg 231.

POLY HANDLE WITH CORD GRIP	CABLE RANGE	PART #
	.520-.680"	713P0CP5
	.680-.980"	713P0DP4
	.980-1.260"	713P0EP4

METAL HANDLE WITH CORD GRIP		
	.635-.750"	793P0CS4
	.770-.850"	793P0DS1
	.875-1.000"	793P0DS3
	1.000-1.125"	793P0ES2

POLY HANDLE		
	.390-1.180"	513P0D30

POLY HANDLE WITH BUILT IN DRAWPLATES		
	.390-1.180"	513P0D30473

Makes connector closures easier.

POLY HANDLE WITH CLAMP & BUSHING		
	.750-.875"	713P0S14
	.875-1.000"	713P0S16
	1.000-1.125"	713P0S18
	1.125-1.250"	713P0S20
	1.250-1.375"	713P0S22

STAINLESS STEEL HANDLE WITH CORD GRIP		
	.625-.750"	7X3P0CS4
	.750-.875"	7X3P0DS1
	.875-1.000"	7X3P0DS3
	1.000-1.125"	7X3P0ES2
	1.125-1.250"	7X3P0ES3

For Stainless Steel devices only.

ANGLES

POLY ANGLE					
	30°	513M3		70°	513M7 Panel mounting only.

METAL ANGLE					
	0°	593M0		30°	593M3
	FS/FD Box 30°				793M3FS
	Base measures approximately 4.2" x 2.7". Due to the variation in sizes of FS boxes, please verify that your FS box matches our dimensions, if not call Customer Service for other solutions.				
	70°				593M7

STAINLESS STEEL ANGLE			
	30°	7X3M3	For Stainless Steel devices only.

BOXES

POLY CONDUIT ENTRY WITH NPT			PART #	
 * 8.5 in³	30°	1/2"	513B3N05	For poly devices only.
	30°	3/4"	513B3N07	* Interior volume with receptacle installed.
	30°	1"	513B3N10	

POLY WALL BOX WITH ANGLE			
 * 179.41 in³	70°		513C7000
		Ground Bar	51AA089

70° poly boxes are not drilled.
* Interior volume with receptacle installed.

POLY ANGLE WITH METAL BOX WITH NPT			
 * 74.6 in³	70°	1/2"	713C7N05
	70°	3/4"	713C7N07
	70°	1"	713C7N10
	70°	1 1/4"	713C7N12
	70°	1 1/2"	713C7N15

* Interior volume with receptacle installed.

METAL BOX WITH NPT		
	0°	1/2"	7T1F0N05
	0°	3/4"	7T1F0N07
	0°	1"	7T1F0N10
	0°	1 1/4"	7T1F0N12

POLY ANGLE WITH METAL BOX WITH NPT			
 * 30.2 in³	30°	1/2"	713C3N05
	30°	3/4"	713C3N07
	30°	1"	713C3N10
	30°	1 1/4"	713C3N12

For metal angle, replace "71" prefix with "79".
* Interior volume with receptacle installed.

STAINLESS STEEL BOX WITH NPT			
	0°	1"	7X3P0N10

For Stainless Steel devices only.

STAINLESS STEEL ANGLE WITH STAINLESS STEEL BOX WITH NPT			
	30°	1"	7X1F0N10

For Stainless Steel devices only.

MISCELLANEOUS ACCESSORIES

Poly Devices Only

FINGER DRAWPLATES		
	61-6A346	Set of Two (2) Recommended for cord to cord assembly applications, for facilitated mating.

PROTECTIVE INLET/PLUG CAP		
	61-6A426	For Inlets/Plugs Only.

PADLOCKABLE INLET/PLUG CAP		
	61-6A826	For Inlets/Plugs Only.

MULTI-CONTACT REMOVAL TOOL		
	61-CA593	

CRIMPER TOOL (GREENLEE OR EQUAL)		
	4CN30	

EUROPEAN CRIMPING TOOL		
	61CA500	

RECEPTACLE LOCKING PIN		
	LP-843	Requires Padlockable Pawl option (-843) on receptacle.

DN9c Multipin - 20 A

Ratings

- **Voltage**
  50 VAC or 480 VAC Max/130 VDC+
  + For DC order 480 V model.
  Not CSA listed.
- **Amperage Rating**
  20 A Current Interrupting (AC Only)
- **Horsepower Ratings**

120 V	1Ø	.5 hp
240 V	1Ø	1.5 hp
208 V	3Ø	2 hp
240 V	3Ø	3 hp
480 V	3Ø	5 hp

- **Environmental Ratings**
  IP54/IP55
- **Temperature Range**
  Min -40°F/Max 140°F
  See pg 260 for temperatures outside of this range.
- **Wiring Capacity**
  Based on THHN wire sizes.
  Min 16 AWG Max 10 AWG
- **Certifications**
  CSA C22.2 NO. 182.1, NOM

Receptacle (female)



Inlet (male)



! Remember to add installation accessories to your order

North American Configurations

VOLTAGE	POLARITY	PART # METAL	PART # METAL
50 V	6P	17-14060	17-18060
50 V	7P	17-14070	17-18070
50 V	8P	17-14080	17-18080
50 V	9P	17-14090	17-18090
480 V	5P+G	17-14051	17-18051
480 V	6P+G	17-14061	17-18061
480 V	7P+G	17-14071	17-18071
480 V	8P+G	17-14081	17-18081

For international configurations and ratings (IEC, CE) visit meltric.com/international-catalog or contact Customer Service at 800-433-7642.

Main Options



Mushroom Pawl

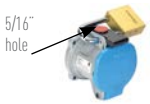

Padlock Pawl

RECEPTACLE OPTIONS	SUFFIX #
Straight Insertion	Recept # -A188[2]
Self-Ejecting Connector Release**	Recept # -348-A188[2]
hp Watertightness (high pressure)	Recept # -HP[2]
Mushroom Pawl	Recept # -375
Screw-Type Locking Pawl	Recept # -845
Padlock Pawl	Recept # -843
180° Opening Lid	Recept # -180
Self-Returning Lid (Manual Close)	Recept # -NC

Notes: ** For self-ejecting connectors and plugs, a 443 suffix must be added to the handle part number. See pages 239-240 for more information.
[2] This option includes the Self-Returning Lid..

! See pages 237-246 for detailed information on these options

Order Example: 50 V DN9c with Self-Returning Lid
DN9c Receptacle 9P = 17-14090-***NC***

Handle Option Guide pgs 243-244

INSTALLATION ACCESSORIES – SIZE 3

When properly installed, all accessories meet or exceed the environmental ratings of the devices they are mounted to; unless otherwise noted.

HANDLES

HANDLE WITH NPT		PART # POLY	PART # METAL
 Poly	1/2"	513P0N05	593P0N05
	3/4"	513P0N07	593P0N07
 Metal	1"	513P0N10	593P0N10
	1 1/4"	513P0N12	593P0N12

For available cord grips, see pg 231.

POLY HANDLE WITH CORD GRIP	CABLE RANGE	PART #
	.520-.680"	713P0CP5
	.680-.980"	713P0DP4
	.980-1.260"	713P0EP4

METAL HANDLE WITH CORD GRIP		
	.635-.750"	793P0CS4
	.770-.850"	793P0DS1
	.875-1.000"	793P0DS3
	1.000-1.125"	793P0ES2

POLY HANDLE		
	.390-1.180"	513P0D30

POLY HANDLE WITH BUILT IN DRAWPLATES		
	.390-1.180"	513P0D30473
	Makes connector closures easier.	

POLY HANDLE WITH CLAMP & BUSHING		
	.750-.875"	713P0S14
	.875-1.000"	713P0S16
	1.000-1.125"	713P0S18
	1.125-1.250"	713P0S20
	1.250-1.375"	713P0S22

BOXES

METAL BOX WITH NPT			PART #
	0°	1/2"	7T1F0N05
	0°	3/4"	7T1F0N07
	0°	1"	7T1F0N10
	0°	1 1/4"	7T1F0N12

METAL ANGLE WITH METAL BOX WITH NPT				
 * 30.1 in³	30°	1/2"	793C3N05	* Interior volume with receptacle installed.
	30°	3/4"	793C3N07	
	30°	1"	793C3N10	
	30°	1 1/4"	793C3N12	

NPT on top or bottom (if rotated). For other configurations, contact Customer Service.

ANGLES

METAL ANGLE			
	0°	593M0	
	30°	593M3	
	FS/FD Box 30°	793M3FS	Base measures approximately 4.2" x 2.7". Due to the variation in sizes of FS boxes, please verify that your FS box matches our dimensions, if not call Customer Service for other solutions.
	70°	593M7	

MISCELLANEOUS ACCESSORIES

FINGER DRAWPLATES		
	61-6A346	Set of Two (2) Recommended for all assembly applications, for facilitated mating.

PROTECTIVE INLET/PLUG CAP		
	19-1A126	For Inlets/Plugs Only.

CORD GRIP WITH OPTIONS	
	see pg 231

RECEPTACLE LOCKING PIN		
	LP-843	Requires Padlockable Pawl option (-843) on receptacle.

DN20c Multipin - 20 A

Ratings

- **Voltage**
  50 VAC or 480 VAC Max/130 VDC+
  + For DC order 480V model. Not CSA listed.
- **Amperage Rating**
  20 A/15 A Current Interrupting* (AC Only)
  * The amperage rating is 15 A when more than 12 contacts are used for power circuits (not control).
- **Horsepower Ratings**

120 V	1Ø	.16 hp
240 V	1Ø	.5 hp
208 V	3Ø	1 hp
240 V	3Ø	1 hp
480 V	3Ø	3 hp

- **Environmental Ratings**
  IP54/IP55
- **Temperature Range**
  Min -40°F/Max 140°F
  See pg 260 for temperatures outside of this range.
- **Wiring Capacity**
  Based on THHN wire sizes.
  Min 16 AWG Max 10 AWG
- **Certifications**
  CSA C22.2 NO. 182.1, NOM

Receptacle (female)



Inlet (male)



! Remember to add installation accessories to your order

North American Configurations

VOLTAGE	POLARITY	PART # METAL	PART # METAL
50 V	10P	17-64100	17-68100
50 V	11P	17-64110	17-68110
50 V	12P	17-64120	17-68120
50 V	13P	17-64130	17-68130
50 V	14P	17-64140	17-68140
50 V	15P	17-64150	17-68150
50 V	16P	17-64160	17-68160
50 V	17P	17-64170	17-68170
50 V	18P	17-64180	17-68180
50 V	19P	17-64190	17-68190
50 V	20P	17-64200	17-68200
480 V	9P+G	17-64091	17-68091
480 V	10P+G	17-64101	17-68101
480 V	11P+G	17-64111	17-68111
480 V	12P+G	17-64121	17-68121
480 V	13P+G	17-64131	17-68131
480 V	14P+G	17-64141	17-68141
480 V	15P+G	17-64151	17-68151
480 V	16P+G	17-64161	17-68161
480 V	17P+G	17-64171	17-68171
480 V	18P+G	17-64181	17-68181
480 V	19P+G	17-64191	17-68191

For international configurations and ratings (IEC, CE) visit meltric.com/international-catalog or contact Customer Service at 800-433-7642.

Main Options



Mushroom Pawl



Self-Ejecting Devices
Requires straight insertion receptacle or inlet and self-ejecting plug or connector.

! See pages 237-246 for detailed information on these options

RECEPTACLE OPTIONS	SUFFIX #
Straight Insertion	Recept # -A188[2]
Self-Ejecting Connector Release**	Recept # -348-A188[2]
hp Watertightness (high pressure)	Recept # -HP[2]
Mushroom Pawl	Recept # -375
Screw-Type Locking Pawl	Recept # -845
Padlock Pawl	Recept # -843
180° Opening Lid	Recept # -180
Self-Returning Lid (Manual Close)	Recept # -NC

INLET OPTIONS	SUFFIX #
Self-Ejecting Plug Release**	Inlet # -338-A188
Straight Insertion	Inlet # -A188

Notes:

** For self-ejecting connectors and plugs, a 443 suffix must be added to the handle part number. See pages 239-240 for more information.

[2] This option includes the Self-Returning Lid.

Order Example: 50 V DN20c with Self-Returning Lid

DN20c Receptacle 19P = 17-64190***-NC***

Handle Option Guide pgs 243-244

INSTALLATION ACCESSORIES – SIZE 5

When properly installed, all accessories meet or exceed the environmental ratings of the devices they are mounted to; unless otherwise noted.

HANDLES

HANDLE WITH NPT		PART # POLY	PART # METAL
 Poly	3/4"	515P0N07	595P0N07
	1"	515P0N10	595P0N10
	1 1/4"	515P0N12	595P0N12
 Metal	1 1/2"	515P0N15	595P0N15
	2"	515P0N20	595P0N20

For available cord grips, see pg 231.

POLY HANDLE WITH CORD GRIP	CABLE RANGE	PART #
	.980-1.260"	715P0EP4
	1.260-1.560"	715P0FP1
	1.520-1.860"	715P0GP2

METAL HANDLE WITH CORD GRIP		
	1.250-1.375"	795P0FS1
	1.438-1.562"	795P0FS2*
	1.562-1.688"	795P0FS3*
	1.688-1.812"	795P0GS1

*May require stripping of cable jacket.

SANTOPRENE HANDLE		
	.708-.984"	555P0D25
	.984-1.377"	555P0D35
	1.377-1.771"	555P0D45
	1.771-1.929"	555P0D49

BOXES

METAL BOX WITH NPT			PART #
	0°	1 1/4"	7T5F0N12
	0°	1 1/2"	7T5F0N15
	0°	2"	7T5F0N20
	0°	2 1/2"	7T5F0N25

METAL ANGLE WITH METAL BOX WITH NPT				
 * 118.9 in³	30°	1 1/4"	795C3N12	* Interior volume with receptacle installed.
	30°	1 1/2"	795C3N15	
	30°	2"	795C3N20	
	30°	2 1/2"	795C3N25	

NPT on top or bottom (if rotated). For other configurations, contact Customer Service.

ANGLES

METAL ANGLE		
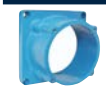	0°	595M0
	30°	595M3
	70°	595M7

MISCELLANEOUS ACCESSORIES

PROTECTIVE INLET/PLUG CAP		
	19-6A126	For Inlets/Plugs Only.

CORD GRIP WITH OPTIONS	
	see pg 231

RECEPTACLE LOCKING PIN		
	LP-843	Requires Padlockable Pawl option (-843) on receptacle.

FINGER DRAWPLATES		
	7X5A346	Set of Two (2) Recommended for all assembly applications, for easier connector closure.

DS7c Multipin - 30 A

Ratings

- **Voltage**
  50 VAC or 600 VAC Max/130 VDC+
  + For DC order 600V model.
- **Switch-Rating (AC Only)**
  Branch Circuit Disconnect
- **Amperage Rating**
  30 A Current Interrupting (AC Only)
- **Temperature Range**
  Min -40°F/Max 140°F
  See pg 260 for temperatures outside of this range.
- **Environmental Ratings**
  IP66/IP67/IP69/IP69K
- **Wiring Capacity**
  Based on THHN wire sizes.
  Min 14 AWG Max 8 AWG
  Aux Contacts - 8 AWG
- **Certifications**
  NOM
  600 V Poly Only: UL 2682, UL 1682

See pg 55-56 for DS7c dimensions.

Receptacle (female)



Inlet (male)



! Remember to add installation accessories to your order

North American UL/CSA Configurations

NOTE: Poly devices should not be inter-mated with metal devices

VOLTAGE	POLARITY	PART #		PART #	
		POLY	METAL	POLY	METAL
50 V	4P	33-34540	37-34540	33-38540	37-38540
50 V	5P	33-34550	37-34550	33-38550	37-38550
50 V	6P	33-34560	37-34560	33-38560	37-38560
50 V	7P	33-34570	37-34570	33-38570	37-38570
600 V	3P+G	33-34531	37-34531	33-38531	37-38531
600 V	4P+G	33-34541	37-34541	33-38541	37-38541
600 V	5P+G	33-34551	37-34551	33-38551	37-38551
600 V	6P+G	33-34561	37-34561	33-38561	37-38561

For international configurations and ratings (IEC, CE) visit meltric.com/international-catalog or contact Customer Service at 800-433-7642.

Main Options



Mushroom Pawl



Padlock Pawl



Self-Ejecting Devices
Requires straight insertion receptacle or inlet and self- ejecting plug or connector.

RECEPTACLE OPTIONS	SUFFIX #	INLET OPTIONS	SUFFIX #
With 2 Auxiliary/Pilot Contacts	**Recept # -172**	With 2 Auxiliary/Pilot Contacts	**Inlet # -172**
With 3 Auxiliary/Pilot Contacts	**Recept # -173**	With 3 Auxiliary/Pilot Contacts	**Inlet # -173**
Straight Insertion	**Recept # -352**[2]	Self-Ejecting Plug Release**	**Inlet # -338**
Self-Ejecting Connector Release**	**Recept # -354**[2]	Without Lockout Hole	**Inlet # -A155**
Mushroom Pawl	**Recept # -375**		
Padlock Pawl	**Recept # -843**		
Screw-Type Locking Pawl	**Recept # -845**		
Metal Pawl (on poly receptacle)	**Recept # -824**		
Self-Returning Lid (Manual Close)	**Recept # -NC**		

Notes:

** For self-ejecting connectors and plugs, a 443 suffix must be added to the handle part number. See pages 239-240 for more information.

[2] This option includes the Self-Returning Lid.

Order Example: 50 V DS7c + mushroom pawl
DS7c Poly receptacle 4P = 33-34540***-375***

! See pages 237-246 for detailed information on these options

Handle Option Guide pgs 243-244

INSTALLATION ACCESSORIES – SIZE 4

When properly installed, all accessories meet or exceed the environmental ratings of the devices they are mounted to; unless otherwise noted.

HANDLES

HANDLE WITH NPT		PART # POLY	PART # METAL
 Poly / Metal	1/2"	514P0N05	594P0N05
	3/4"	514P0N07	594P0N07
	1"	514P0N10	594P0N10
	1 1/4"	514P0N12	594P0N12
	1 1/2"	514P0N15	594P0N15

For available cord grips, see pg 231.

POLY HANDLE WITH CORD GRIP	CABLE RANGE	PART #
	.680-.980"	714P0DP4
	.980-1.260"	714P0EP4
	1.260-1.560"	714P0FP1

METAL HANDLE WITH CORD GRIP		
	.750-.875"	794P0DS1
	.875-1.000"	794P0DS3
	1.000-1.125"	794P0ES2
	1.125-1.250"	794P0FS0
	1.250-1.375"	794P0FS1
	1.375-1.438"	794P0FS4
	1.438-1.562"	794P0FS2*
	1.562-1.688"	794P0FS3*

*May require stripping of cable jacket.

POLY HANDLE		
	.511-1.377"	514P0D35

POLY HANDLE WITH BUILT IN DRAWPLATES		
	.511-1.377"	514P0D35473

Makes connector closures easier.

SANTOPRENE HANDLE		
	.551-.787"	554P0D20L
	.708-.984"	554P0D25L
	.984-1.377"	554P0D35L
	1.377-1.771"	554P0D45L
	1.771-1.929"	554P0D49L

ANGLES

POLY ANGLE					
	30°	514M3		70°	514M7 Panel mounting only.

METAL ANGLE			
	0°	594M0	
	30°	594M3	
	30°	794M3L	
	30° Oversized	794M3	Mounts on oversize box only. Order with 7T5F0Nxx. See pg 50.
	70°	594M7	

BOXES

POLY CONDUIT ENTRY WITH NPT				
 * 28.1 in³	30°	1/2"	514B3N05	For poly devices only.
	30°	3/4"	514B3N07	
	30°	1"	514B3N10	* Interior volume with receptacle installed.
	30°	1 1/4"	514B3N12	

POLY WALL BOX WITH ANGLE				
 * 181.24 in³	70°		514C7000	70° poly boxes are not drilled. * Interior volume with receptacle installed.
		Ground Bar	51AA089	

POLY ANGLE WITH METAL BOX WITH NPT			
 * 177.7 in³	70°	1/2"	714C7N05
	70°	3/4"	714C7N07
	70°	1"	714C7N10
	70°	1 1/4"	714C7N12
	70°	1 1/2"	714C7N15

* Interior volume with receptacle installed.

METAL BOX WITH NPT		
	0°	1"	7T4F0N10
	0°	1 1/4"	7T4F0N12
	0°	1 1/2"	7T4F0N15
	0°	2"	7T4F0N20

POLY ANGLE WITH METAL BOX WITH NPT			
 * 61.0 in³ Poly Angle * 59.9 in³ Metal Angle	30°	1"	714C3N10
	30°	1 1/4"	714C3N12
	30°	1 1/2"	714C3N15
	30°	2"	714C3N20

For metal angle, replace "71" prefix with "79". * Interior volume with receptacle installed.

NPT on top or bottom (if rotated). For other configurations contact Customer Service.

MISCELLANEOUS ACCESSORIES

FINGER DRAWPLATES		
	31-6A346	Set of Two (2) Recommended for all assembly applications, for facilitated mating.

PROTECTIVE INLET/PLUG CAP		
	31-6A426	For Inlets/Plugs Only.

PADLOCKABLE INLET/PLUG CAP		
	DS6MC	Aluminum – For Inlets/Plugs Only. -A155 suffix required on inlet part # to retain water ingress protection.

SPRING-LOADED PADLOCKABLE INLET/PLUG CAP			
	31-6A226	For Poly Inlets/Plugs Only.	In order to achieve max water ingress protection of Type 3R/IP55, spring loaded caps should be ordered with inlets equipped with -A155 suffix.
	39-6A226	For Metal Inlets/Plugs Only.	

EASY RETROFIT ADAPTER PLATES		
	see pg 246	Mount to existing boxes.

RECEPTACLE LOCKING PIN		
	LP-843	Requires Padlockable Pawl option (-843) on receptacle.

DR7c Multipin - 50 A

Ratings

- **Voltage**
  50 VAC or 600 VAC Max/130 VDC+
  + For DC order 600V model.
- **Amperage Rating**
  50 A Non-Current Interrupting
- **Temperature Range**
  Min -40°F/Max 140°F
  See pg 260 for temperatures outside of this range.
- **Environmental Ratings**
  IP66/IP67/IP69/IP69K
- **Wiring Capacity**
  Based on THHN wire sizes.
  Min 14 AWG Max 8 AWG
  Aux Contacts - 8 AWG
- **Certifications**
  NOM
  600 V Poly Only: UL 1682

See pgs 103-104 for DR7c dimensions.

Receptacle (female)



Inlet (male)



! Remember to add installation accessories to your order

North American UL/CSA Configurations

NOTE: Poly devices should not be inter-mated with metal devices

VOLTAGE	POLARITY	PART #		PART #	
		POLY	METAL	POLY	METAL
50 V	4P	31-34940	39-34940	31-38940	39-38940
50 V	5P	31-34950	39-34950	31-38950	39-38950
50 V	6P	31-34960	39-34960	31-38960	39-38960
50 V	7P	31-34970	39-34970	31-38970	39-38970
600 V	3P+G	31-34931	39-34931	31-38931	39-38931
600 V	4P+G	31-34941	39-34941	31-38941	39-38941
600 V	5P+G	31-34951	39-34951	31-38951	39-38951
600 V	6P+G	31-34961	39-34961	31-38961	39-38961

For international configurations and ratings (IEC, CE) visit meltric.com/international-catalog or contact Customer Service at 800-433-7642.

Main Options



Mushroom Pawl



Padlock Pawl

RECEPTACLE OPTIONS	SUFFIX #	INLET OPTIONS	SUFFIX #
With 2 Auxiliary/Pilot Contacts	**Recept # -172**	With 2 Auxiliary/Pilot Contacts	**Inlet # -172**
With 3 Auxiliary/Pilot Contacts	**Recept # -173**	With 3 Auxiliary/Pilot Contacts	**Inlet # -173**
Straight Insertion	**Recept # -352**[2]	Without Lockout Hole	**Inlet # -A155**
Mushroom Pawl	**Recept # -375**		
Padlock Pawl	**Recept # -843**		
Screw-Type Locking Pawl	**Recept # -845**		
Metal Pawl (on poly receptacle)	**Recept # -824**		
Self-Returning Lid (Manual Close)	**Recept # -NC**		

Notes: [2] This option includes the Self-Returning Lid.

! See pages 237-246 for detailed information on these options

Order Example: 50 V DR7c + mushroom pawl
DR7c Poly receptacle 4P = 31-34940***-375***

Handle Option Guide pgs 243-244

INSTALLATION ACCESSORIES – SIZE 4

When properly installed, all accessories meet or exceed the environmental ratings of the devices they are mounted to; unless otherwise noted.

HANDLES

HANDLE WITH NPT		PART # POLY	PART # METAL
 Poly	1/2"	514P0N05	594P0N05
	3/4"	514P0N07	594P0N07
 Metal	1"	514P0N10	594P0N10
	1 1/4"	514P0N12	594P0N12
	1 1/2"	514P0N15	594P0N15

For available cord grips, see pg 231.

POLY HANDLE WITH CORD GRIP	CABLE RANGE	PART #
	.680-.980"	714P0DP4
	.980-1.260"	714P0EP4
	1.260-1.560"	714P0FP1

METAL HANDLE WITH CORD GRIP		
	.750-.875"	794P0DS1
	.875-1.000"	794P0DS3
	1.000-1.125"	794P0ES2
	1.250-1.375"	794P0FS1
	1.438-1.562"	794P0FS2*
	1.562-1.688"	794P0FS3*

*May require stripping of cable jacket.

POLY HANDLE		
	.511-1.377"	514P0D35

POLY HANDLE WITH BUILT IN DRAWPLATES		
	.511-1.377"	514P0D35473

Makes connector closures easier.

SANTOPRENE HANDLE		
	.551-.787"	554P0D20L
	.708-.984"	554P0D25L
	.984-1.377"	554P0D35L
	1.377-1.771"	554P0D45L
	1.771-1.929"	554P0D49L

ANGLES

POLY ANGLE					
	30°	514M3		70°	514M7

METAL ANGLE			
	0°	594M0	
	30°	594M3	
	30°	794M3L	
	Oversized 30°	794M3	Mounts on oversize box only. Order with 7T5F0Nxx. See pg 50.
	70°	594M7	

BOXES

POLY CONDUIT ENTRY WITH NPT				
 * 28.1 in³	30°	1/2"	514B3N05	For poly devices only.
	30°	3/4"	514B3N07	
	30°	1"	514B3N10	* Interior volume with receptacle installed.
	30°	1 1/4"	514B3N12	

POLY WALL BOX WITH ANGLE				
 * 181.24 in³	70°		514C7000	70° poly boxes are not drilled.
		Ground Bar	51AA089	* Interior volume with receptacle installed.

POLY ANGLE WITH METAL BOX WITH NPT			
 * 177.7 in³	70°	1/2"	714C7N05
	70°	3/4"	714C7N07
	70°	1"	714C7N10
	70°	1 1/4"	714C7N12
	70°	1 1/2"	714C7N15

* Interior volume with receptacle installed.

METAL BOX WITH NPT			
	0°	1"	7T4F0N10
	0°	1 1/4"	7T4F0N12
	0°	1 1/2"	7T4F0N15
	0°	2"	7T4F0N20

POLY ANGLE WITH METAL BOX WITH NPT			
 * 61.0 in³ Poly Angle * 59.9 in³ Metal Angle	30°	1"	714C3N10
	30°	1 1/4"	714C3N12
	30°	1 1/2"	714C3N15
	30°	2"	714C3N20

For metal angle, replace "71" prefix with "79".
* Interior volume with receptacle installed.

NPT on top or bottom (if rotated). For other configurations contact Customer Service.

MISCELLANEOUS ACCESSORIES

FINGER DRAWPLATES		
	31-6A346	Set of Two (2) Recommended for all assembly applications, for facilitated mating.

PROTECTIVE INLET/PLUG CAP		
	31-6A426	For Inlets/Plugs Only.

PADLOCKABLE INLET/PLUG CAP		
	DS6MC	Aluminum – For Inlets/Plugs Only. -A155 suffix required on inlet part # to retain water ingress protection.

SPRING-LOADED PADLOCKABLE INLET/PLUG CAP			
	31-6A226	For Poly Inlets/Plugs Only.	In order to achieve max water ingress protection of Type 3R/IP55, spring loaded caps should be ordered with inlets equipped with -A155 suffix.
	39-6A226	For Metal Inlets/Plugs Only.	

EASY RETROFIT ADAPTER PLATES		
	see pg 246	Mount to existing boxes.

RECEPTACLE LOCKING PIN		
	LP-843	Requires Padlockable Pawl option (-843) on receptacle.

MULTIPIN Spare Parts

Male Configuration

PN7c pictured

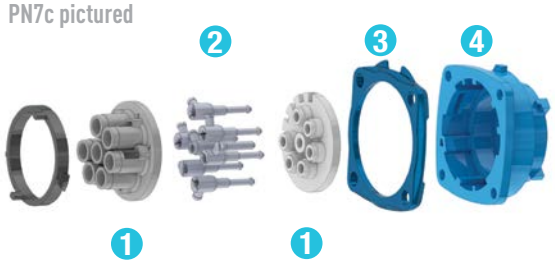

DN9c pictured

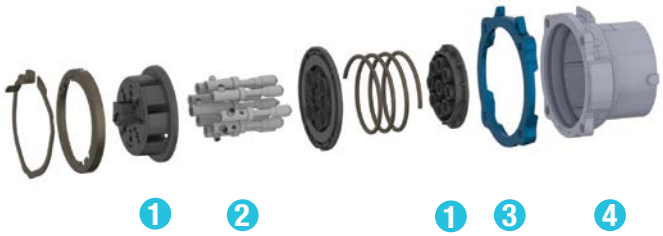

	DSN12c POLY	DSN24c POLY	DSN37c POLY	DS24c SS	DS37c SS
Plug Insulator	63-AA910	63-BA910	63-CA910	37-BA910-SS	37-CA910-SS
Plug Contact (Qty = 13)	63-AA113	63-BA113	63-CA113	37-BA113	37-CA113
Plug Casing	63-1A105	63-3A105	63-6A105	37-1A014-SS	37-CA014-SS
Device Gasket	63-1AB26	63-3AB26	63-6AB26	37-1A026-SS	37-3AB26

		PN7c POLY	PN7c METAL	PN12c POLY	PN12c METAL
1	Plug Insulator (Top & Bottom)	03-PA910	07-PA910	03-AA910	07-AA910
2	Plug Contact	03-PA911	07-PA911	-	-
2	Plug Contact (Qty = 13)	-	-	03-AA113	07-AA113
2	Plug Ground Contact	03-PA919	07-PA919	-	-
3	Device Gasket	03-NAB26	07-NAB26	03-NAB26	07-NAB26
4	Plug Casing	03-NA014	07-NA014	03-NA014	07-NA014

		DN9c METAL	DN20c METAL	DS7c/ DR7c POLY	DS7c/ DR7c METAL
1	Plug Insulator (Top & Bottom)	17-1A910	17-6A910	33-3A910-263	39-3A910-263
2	Plug PhaseContact (Short Outside)	17-1A911	17-6A911	33-3A911	39-3A911
2	Plug Phase (Pilot) Contact (Long Inside)	17-1A711	17-6A711	33-3A911-172	39-3A911-172
2	Plug Ground Contact	17-1A919	17-6A919	33-3A919	39-3A919
3	Device Gasket	17-1AB26	17-6AB26	33-6AB26	39-6AB26
4	Plug Casing	17-1A014	17-6A014	33-6A014	39-6A014

Please provide full part number for accurate part alignment

Part numbers in catalog are for current revisions, others may be available upon request.

For replacement parts contact Customer Service at 800-433-7642.

Female Configuration

PN7c pictured

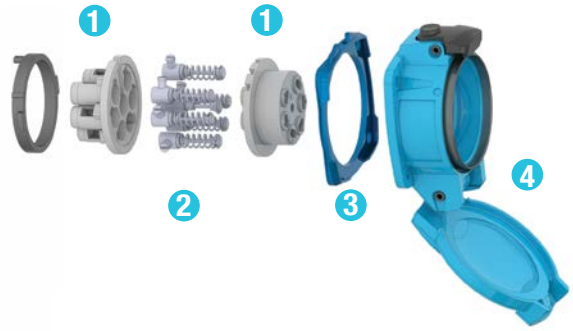

DN9c pictured

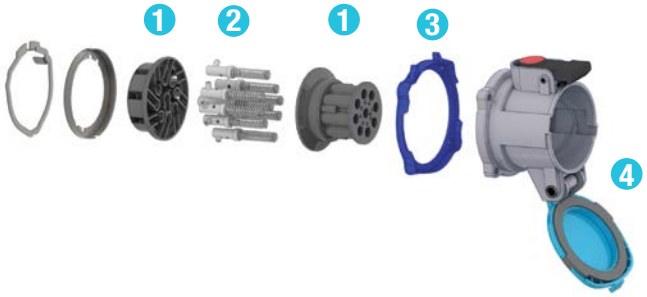

	DSN12c POLY	DSN24c POLY	DSN37c POLY	DS24c SS	DS37c SS
Receptacle Insulator	63-AA920	63-BA920	63-CA920	37-BA920-SS	37-CA920-SS
Receptacle Contact (Qty = 13)	63-AA213	63-BA213	63-CA213	37-BA213	37-CA213
Receptacle Casing	63-1A305	63-3A305	63-6A305	37-1A024-SS	37-CA024-SS
Lid Replacement Kit	63-1A125	63-3A125	63-6A125	-	-
Pawl Replacement Kit	63-1A824	63-3A824	63-6A824	-	-
Device Gasket	63-1AB26	63-3AB26	63-6AB26	37-1A026-SS	37-3AB26

	PN7c POLY	PN7c METAL	PN12C POLY	PN12c METAL
1 Receptacle Insulator (Top & Bottom)	03-PA920	07-PA920	03-AA920	07-AA920
2 Receptacle Contact	03-PA921	07-PA921	-	-
2 Receptacle Contact (Qty=13)	-	-	03-AA213	07-AA213
2 Receptacle Ground Contact	03-PA929	07-PA929	-	-
3 Device Gasket	03-NAB26	07-NAB26	03-NAB26	07-NAB26
4 Receptacle Casing (as shown)	03-NA024	07-NA024	03-NA024	07-NA024

	DN9c POLY	DN20c METAL	DS7C/DR7C POLY	DS7C/DR7C METAL
1 Receptacle Insulator (Top & Bottom)	17-1A920	17-6A920	33-3A920-263	39-3A920-263
2 Receptacle Phase Contact (Short Outside)	17-1A921	17-6A921	33-3A921	39-3A921
2 Receptacle Phase (Pilot) Contact (Long Inside)	17-1A721	17-6A721	33-3A921-172	39-3A921-172
2 Receptacle Ground Contact	17-1A929	17-6A929	33-3A929	39-3A929
3 Device Gasket	17-1AB26	17-6AB26	33-6AB26	39-6AB26
4 Receptacle Casing (as shown)	17-1A024	17-6A024	33-6A024	39-6A024
4 Replacement Lid	17-1A925	17-6A925	33-6A125	39-6A925

DN DIMENSIONS – Provided in Inches

SCAN ME >>

Dimensions are for reference only and may change depending on accessories used. For precise dimensions contact MELTRIC Engineering.

Plug

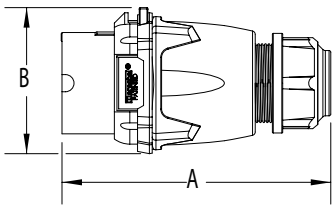

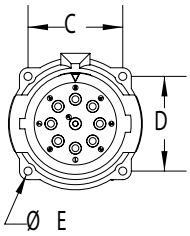

Inlet

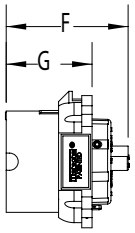

PRODUCT	A	B	C	D	ØE	F	G
DN9c	5.79	3.39	2.19	2.19	0.20	2.60	2.01
DN20c	10.75	4.92	3.20	3.20	0.24	4.48	3.50

Connector

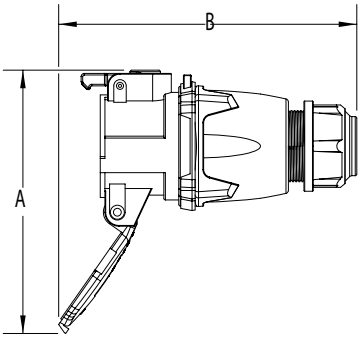

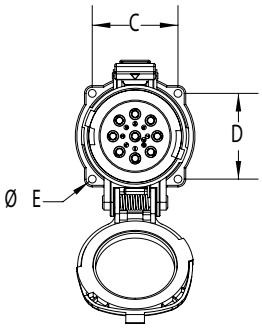

Receptacle

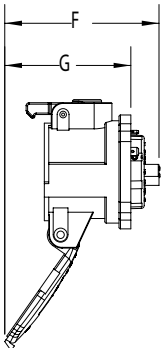

PRODUCT	A	B	C	D	E	F	G
DN9c	3.86	7.55	2.19	2.19	0.2	5.51	4.92
DN20c	5.20	12.12	3.2	3.2	0.24	6.14	7.68

Connector/Plug

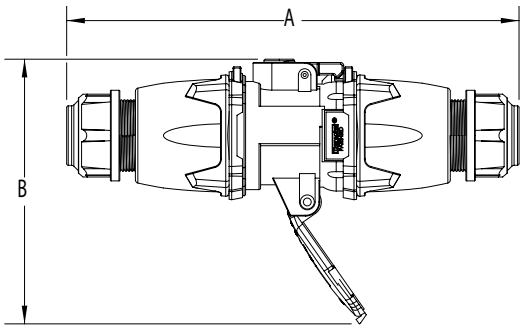

PRODUCT	A	B
DN9c	11.40	6.67
DN20c	17.25	7.34

Box/30° Angle/Receptacle/Plug

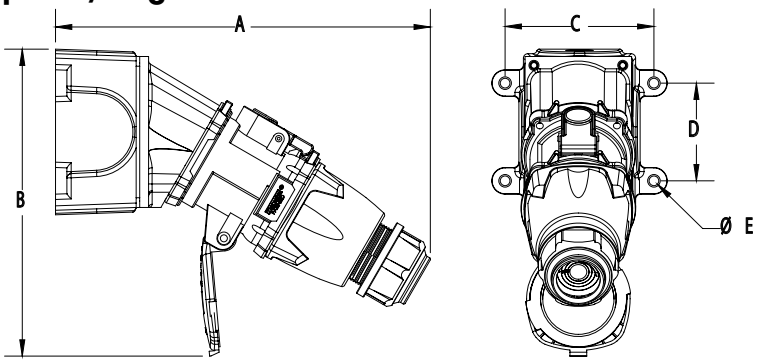

PRODUCT	A	B	C	D	øE
DN9c	10.55	8.64	4.19	2.75	0.27
DN20c	16.34	10.75	6.75	4.25	0.31

RETTBOX® S

Electromagnetic Self-Ejection





Main Advantages

- Durable in harsh environments
- Available in multiple voltage configurations
- Safety features provide maximum protection
- Easy plug insertion and removal

- Features and Ratings p. 84
- RETTBOX® S p. 85
- Dimensions p. 86

SCAN ME >>

WATCH ME >>

PRODUCT FEATURES

RETTBOX® S is a professional use compact and load-breaking, self-ejecting plug. The best-in-class industrial plug and receptacle providing RETTBOX® S complies with the following standards:

- European Low Voltage Directive and RoHS, European REACH regulation
- IEC/EN 61984, IEC/EN 60947-3

Applications

VOLTAGE PRESENCE AND AUXILIARY BATTERY CHARGING LIGHT INDICATORS

Figure 1: with an external battery charger
12 VDC or 24 VDC power supply

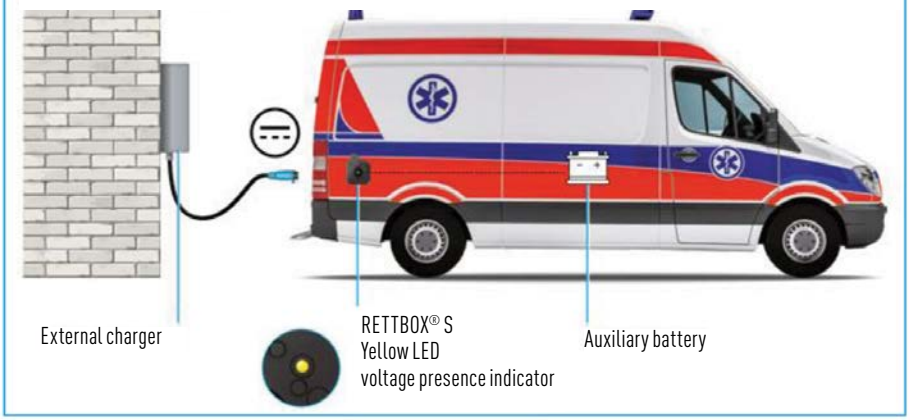

Figure 2: with an on-board vehicle charger
230 VAC

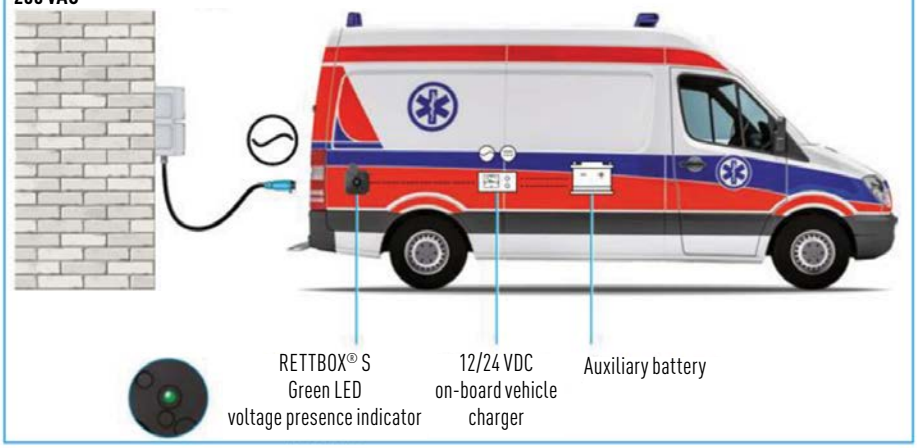

OPTION: Order a 24 V yellow LED battery charging indicator. Reference 151ALED-24J

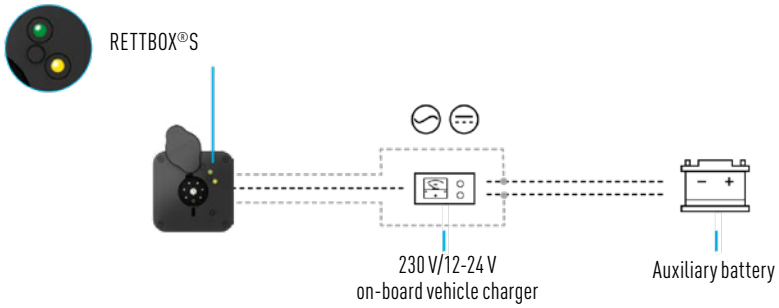

Operating Instructions



1. Easy to Install.
Direct enclosure on the vehicle body.

Direct wiring to the vehicle battery or the auxiliary battery.

Possible integration onto curved vehicle bodies.



2. Easy to use

1. Easy Connection
   - Straight single-hand insertion.
   - Good grip feeling with the handle.
   - Normally closed swivel-lid.
2. Automatic ejection when the vehicle is starting.
3. Manual ejection of the plug also available (push button).

RETTBOX® S

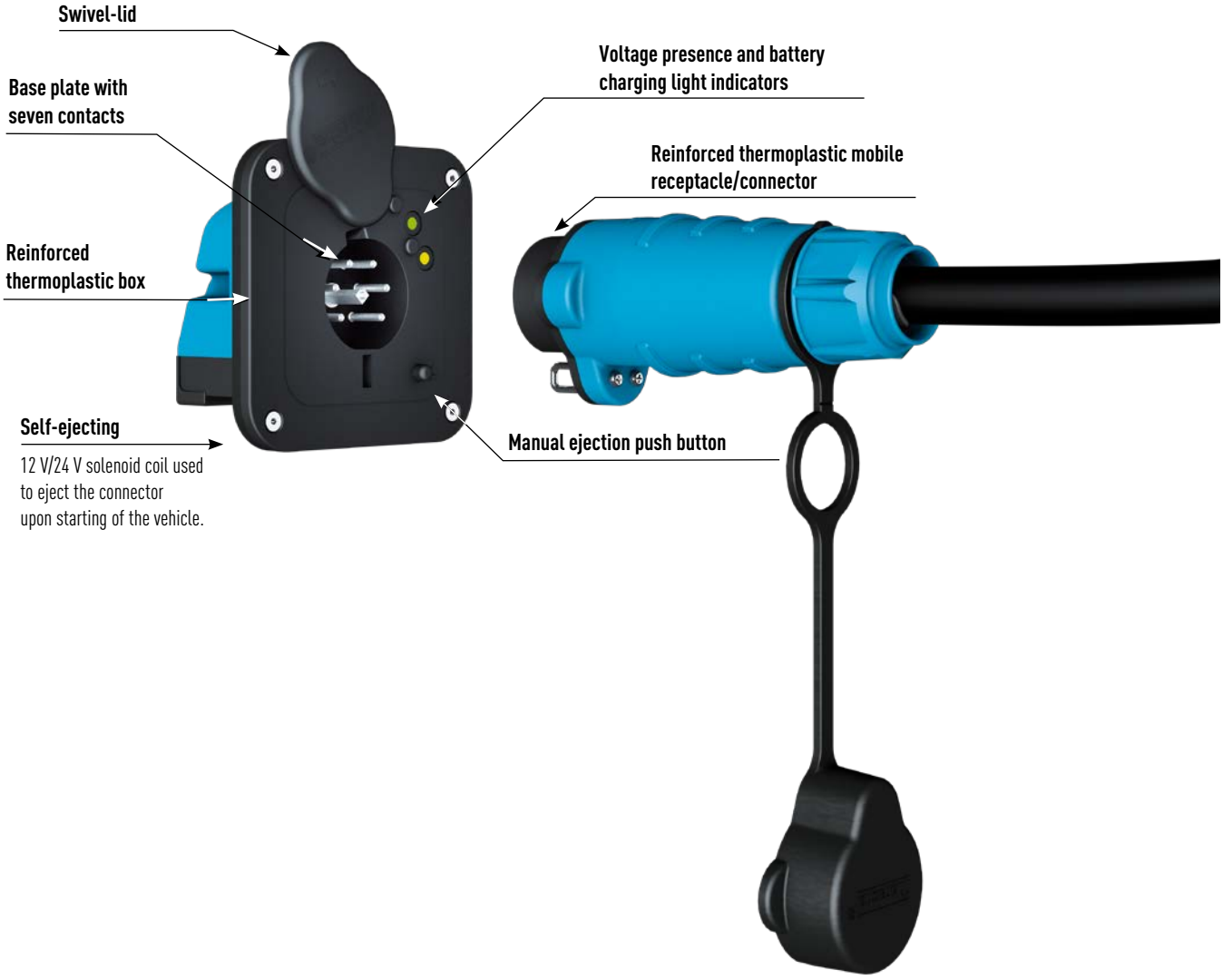



BENEFITS

- **GUARANTEED EJECTION:**
  Automatic ejection upon start-up of the vehicle without any operator intervention.
- **USER-FRIENDLY DEVICE:**
  Easy connection with one hand only. Choose from a straight handle or a 90° angled handle.
- **IP54 INGRESS PROTECTION:**
  The Ingress protection of the RETTBOX® S allows for safe cleaning of the vehicle and it provides protection against poor weather conditions.
- **VOLTAGE DETECTION LIGHT:**
  Indicator lights confirm when there is voltage present and when the charger and battery are powered.
- **DECONTACTOR™ TECHNOLOGY:**
  RETTBOX® S features MELTRIC's unique DECONTACTOR™ technology which provides optimal safety and unrivaled performance.

ELECTROMAGNETIC SELF-EJECTION





VOLTAGE	AMPERAGE	POLARITY	PART # ENCLOSURE	PART # CONNECTOR	
				Straight Cable Range 0.19-0.83	60° Angle Cable Range 0.35-0.71
380-480 VAC	30 A	6P+G	1536036	1533036	15C3036
220-250 VAC	20 A	6P+G	1516016	1513016	15C3016
110-130 VAC	20 A	6P+G	1516056	1513056	15C3056
24 VDC	20 A	6P+G	1516046	1513046	15C3046
12 VDC	20 A	6P+G	1516026	1513026	15C3026

Ratings

- **Voltage**
  480 VAC or 24 VDC
- **Amperage Ratings**
  20 A or 30 A
- **Environmental Ratings**
  IP Enclosure with closed lid: IP54
  IP Connector with cap: IP44
- **Temperature Range**
  Min -40°F/Max 140°F
- **Wiring Capacity**
  Min 14 AWG Max 10 AWG
- **Terminal Type**
  Screw
- **Applicable Standards**
  IEC

OPTIONS

CHARGING INDICATOR			PROTECTIVE CAP		
	151ALED-24J	24 V yellow LED battery charging indicator		151A125	Replacement Only (Cap comes standard with receptacle)

BACK BOX	
	15-1A053-1

RETTBOX® S DIMENSIONS – Provided in Inches

Dimensions are for reference only and may change depending on accessories used. For precise dimensions contact MELTRIC Engineering.

SCAN ME >>

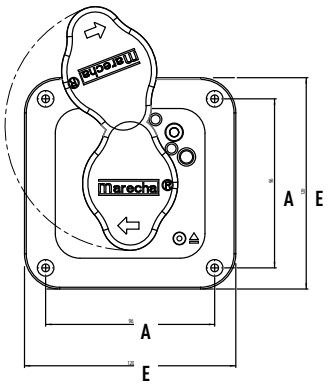

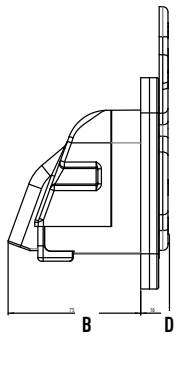

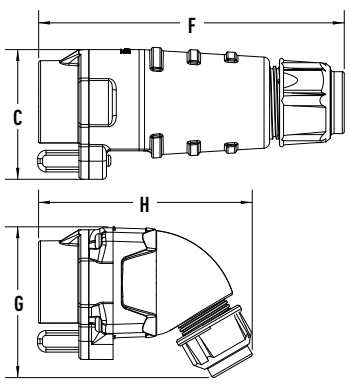

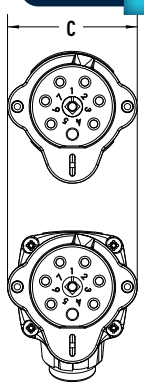

PRODUCT	A	B	C	D	E	F	G	øH
RETTBOX® S	4.72	2.95	2.60	0.63	3.78	6.14	3.03	4.29



STANDARD DUTY

Plugs & Receptacles

MELTRIC Standard Duty plugs and receptacles provide safe, economical, and robust connections for applications up to 250 A. Each device features MELTRIC spring-loaded, silver-nickel, butt-style contacts for consistent and reliable connections. Exclusive safety features ensure operator safety.



DR LARGER AMPERAGE RANGE P. 89

- 30 A to 250 A, Type 3R (Standard) or Type 4X (Optional)
- Poly or metal casings (most sizes)
- Larger conductor capacities



PN COMPACT AND DURABLE P. 105

- 15 A to 20 A
- Up to 600 V

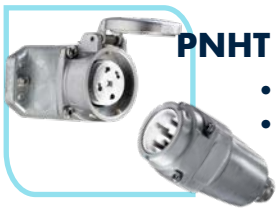

PNHT HIGH TEMPERATURE APPLICATIONS P. 113

- Temperatures up to 465° F
- Up to 30 A, IP44



DSDC DIRECT CURRENT P. 117

- 30 A to 200 A, Type 3R and Type 4X
- Poly or metal casings



DR
Standard Duty







Main Advantages

- High amperage capacity
- Up to 6 auxiliary contacts
- Robust metal or poly construction

- Features and Ratings p. 90
- DR30 p. 91
- DR50 p. 93
- DR100 p. 95
- DR150 p. 97
- DR250 p. 99
- Spare Parts p. 101
- Dimensions p. 103

SCAN ME >>

PRODUCT FEATURES

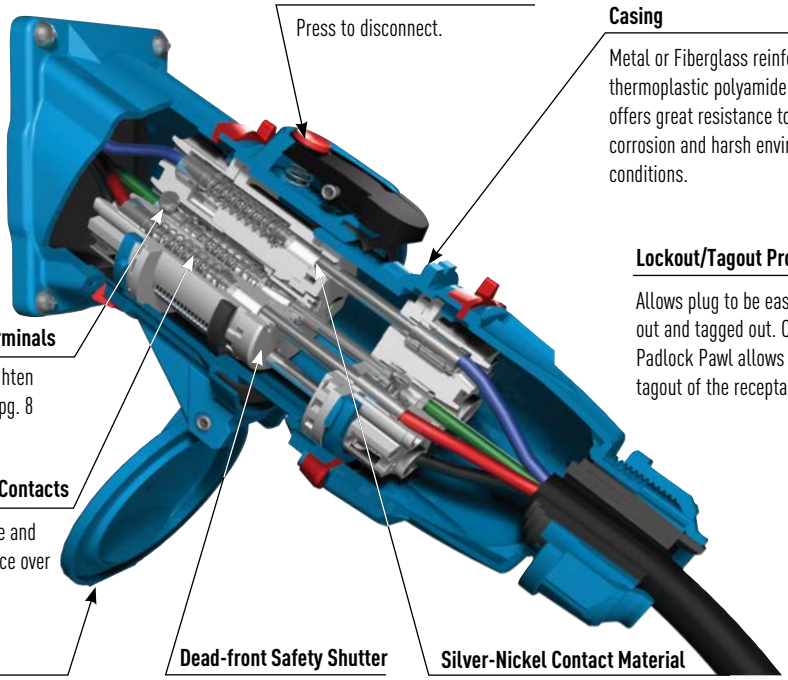

OFF Button

Press to disconnect.

Casing

Metal or Fiberglass reinforced thermoplastic polyamide material offers great resistance to impact, corrosion and harsh environmental conditions.

Lockout/Tagout Provisions

Allows plug to be easily locked out and tagged out. Optional Padlock Pawl allows lockout/tagout of the receptacle.

Spring Assisted Screw Terminals

Patented design ensures "Tighten and Forget" confidence. See pg. 8

Spring-Loaded Butt-Style Contacts

Ensures optimal contact force and superior electrical performance over thousands of operations.

Lid

Provides 3R or Type 4X/IP69/IP69K for additional protection in harsh environments.

Dead-front Safety Shutter

Ensures safety by preventing user access to live parts.

Silver-Nickel Contact Material

Solid silver-nickel contact surfaces provide superior conductivity, durability and corrosion resistance.

General Ratings

Amperage	30 to 400 A
Voltage	600 VAC Max
Frequency	60-400 Hz
Short-Circuit (Withstand)	10 kA to 100 kA*
Environmental	Type 3R or Type 4X/IP69/IP69K
Temperature	Min -40°F/Max 140°F

* DR30, 50 and 100 are rated 100 kA; DR150, 250 and 400 are 10 kA to 65 kA. Testing was performed with RK1 current limiting fuses sized to at least 100% of the device's ampacity rating.

Current Interruption Listings

Model	Current Interruption Capabilities
DR30	Not for current interrupting
DR50	For current interrupting up to 250 VAC***
DR100	For current interrupting up to 250 VAC***
DR150	For current interrupting up to 250 VAC***
DR250	Not for current interrupting
DR400	Not for current interrupting

*** Devices rated for current interrupting are not intended for repetitive switching duties.

Listings

Category	UL	CSA	IEC	NOM
Plugs and Receptacles	UL 1682	C22.2 No. 182.1	60309-1	NOM-003-SCFI-2014

Operating Instructions



When the plug and receptacle are latched together, the circuit is connected.



Pressing the pawl breaks the connection and opens the circuit. The plug is ejected to its rest position.



Rotating the plug 30° counterclockwise closes the safety shutter and frees the plug to be withdrawn from the receptacle.



The plug and the receptacle are separated. The safety shutter prevents access to live parts.

5 To reconnect, insert plug into receptacle, rotate 30° clockwise, and apply insertion force.

DR30 Standard Duty - 30 A

UL/CSA Ratings

- **Max Amperage & Voltage**
  30 A, 600 VAC
- **Current Interruption Capability**
  Not for current interrupting
  For Switch-Rated devices, see DSN & DS sections.
- **Short Circuit Rating**
  100 kA
  Testing was performed with RK1 current limiting Mersen fuses sized at least 100% of the device's ampacity rating.
- **Environmental Ratings**
  Type 3R (Standard)
  Type 4X (Optional)
- **Temperature Range**
  Min -40°F/Max 140°F
  See pg 260 for temperatures outside of this range.
- **Wiring Capacity**
  Based on THHN wire sizes.
  Min 14 AWG Max 8 AWG
  Aux Contacts: Max 14 AWG
- **Certifications**
  UL 1682, CSA C22.2 NO. 182.1, NOM

Receptacle (female)



Inlet (male)



! Remember to add installation accessories to your order

North American UL/CSA Configurations

VOLTAGE	POLARITY	PART # POLY	PART # POLY
120 V	1P+N+G	31-14235-K16	31-18235-K16
120 208 V	3P+N+G	31-14237-K16	31-18237-K16
125 V	1P+N+G	31-14175-K07	31-18175-K07
125 250 V	2P+N+G	31-14176-K07	31-18176-K07
208 V	2P+G	31-14232-K16	31-18232-K16
208 V	3P+G	31-14233-K16	31-18233-K16
250 V	2P+G	31-14172-K07	31-18172-K07
250 V	3P+G	31-14173-K07	31-18173-K07
277 V	1P+N+G	31-14245-K04	31-18245-K04
277 480 V	3P+N+G	31-14247-K04	31-18247-K04
347 600 V	3P+N+G	31-14187-K14	31-18187-K14
480 V	2P+G	31-14242-K04	31-18242-K04
480 V	3P+G	31-14243-K04	31-18243-K04
600 V	2P+G	31-14182-K14	31-18182-K14
600 V	3P+G	31-14183-K14	31-18183-K14

For international configurations and ratings (IEC, CE) visit meltric.com/international-catalog or contact Customer Service at 800-433-7642.

Main Options



Auxiliary/Pilot Contacts



Mushroom Pawl



Padlock Pawl



Self-Returning Lid
Recommended for cord applications to keep lid tucked in to avoid damage.

! See pages 237-246 for detailed information on these options

RECEPTACLE OPTIONS	SUFFIX #	INLET OPTIONS	SUFFIX #
With 2 Auxiliary/Pilot Contacts	**Recept # -972**	With 2 Auxiliary/Pilot Contacts	**Inlet # -972**
Type 4X & Self-Returning Lid	**Recept # -4X**	Type 4X Watertightness	**Inlet # -4X**
Mushroom Pawl	**Recept # -375**	Without Lockout Hole	**Inlet # -A155**
Padlock Pawl	**Recept # -843**	For Microswitch	**Inlet # -270[3,4]**
Screw-Type Locking Pawl	**Recept # -845**		
Metal Pawl (on poly receptacle)	**Recept # -824**		
Self-Returning Lid (Manual Close)	**Recept # -NC**		
With Microswitch	**Recept # -270[3,4]**		

Notes:

[3] Not UL/CSA listed.

[4] Not available on 3P+N+G configurations.

Order Example: 480 V DR30 + 2 auxiliary contacts
DR30 Poly inlet 3P+G = 31-18243-K04***-972***

Handle Option Guide pgs 243-244

INSTALLATION ACCESSORIES – SIZE 2

When properly installed, all accessories meet or exceed the environmental ratings of the devices they are mounted to; unless otherwise noted.

HANDLES

HANDLE WITH NPT		PART # POLY WITH DRAWPLATES	PART # POLY	PART # METAL
NEW Poly with drawplates	1/2"	512P0N05	512P0N05E2615	592P0N05
	3/4"	512P0N07	512P0N07E2615	592P0N07
	1"	512P0N10	512P0N10E2615	592P0N10
Poly	1 1/4"	512P0N12	512P0N12E2615	-
Metal				

For available cord grips, see pg 231.

POLY HANDLE WITH CORD GRIP	CABLE RANGE	PART # WITH DRAWPLATES	PART #
NEW with drawplates	.350-.520"	712P0BP6	712P0BP6E2615
	.520-.680"	712P0CP5	712P0CP5E2615
	.680-.980"	712P0DP4	712P0DP4E2615
	.980-1.260"	712P0EP4	712P0EP4E2615

METAL HANDLE WITH CORD GRIP		
.438-.500"	792P0BS3	
.500-.562"	792P0BS4	
.562-.625"	792P0CS2	
.625-.750"	792P0CS4	
.770-.875"	792P0DS1	
.870-1.000"	792P0DS3	

POLY HANDLE		
.200-.820"	512P0D21	

POLY HANDLE WITH CLAMP & BUSHING		
.750-.875"	712P0S14	
.875-1.000"	712P0S16	
1.000-1.125"	712P0S18	
1.125-1.250"	712P0S20	
1.250-1.375"	712P0S22	

ANGLES

POLY ANGLE			
30°	512M3		
70°	512M7	Panel mounting only.	

METAL ANGLE			
0°	592M0		
30°	592M3		
FS/FD 30°	792M3FS	Base measures approximately 4.2" x 2.7". Due to the variation in sizes of FS boxes, please verify that your FS box matches our dimensions, if not call Customer Service for other solutions.	

BOXES

POLY CONDUIT ENTRY WITH NPT		PART #	
30°	1/2"	512B3N05	For poly devices only. * Interior volume with receptacle installed.
30°	3/4"	512B3N07	
* 7.0 in³			

POLY WALL BOX WITH ANGLE			
70°		512C7000	70° poly boxes are not drilled. * Interior volume with receptacle installed.
* 82.0 in³			
Ground Bar		51AA089	

POLY ANGLE WITH METAL BOX WITH NPT			
70°	1/2"	712C7N05	* Interior volume with receptacle installed.
70°	3/4"	712C7N07	
70°	1"	712C7N10	
70°	1 1/4"	712C7N12	
70°	1 1/2"	712C7N15	
* 74.6 in³			

METAL BOX WITH NPT		
0°	1/2"	7T1F0N05
0°	3/4"	7T1F0N07
0°	1"	7T1F0N10
0°	1 1/4"	7T1F0N12

POLY ANGLE WITH METAL BOX WITH NPT			
30°	1/2"	712C3N05	For metal angle, replace "71" prefix with "79". * Interior volume with receptacle installed
30°	3/4"	712C3N07	
30°	1"	712C3N10	
30°	1 1/4"	712C3N12	
* 28.7 in³			

NPT on top or bottom (if rotated). For other configurations, contact Customer Service.

MISCELLANEOUS ACCESSORIES

FINGER DRAWPLATES		
61-3A346	Set of Two (2) Recommended for all assembly applications, for facilitated mating.	

PROTECTIVE INLET/PLUG CAP		
31-1A426	For Inlets/Plugs Only.	

PADLOCKABLE INLET/PLUG CAP		
DS1PC	For Inlets/Plugs Only.	

SPRING-LOADED PADLOCKABLE INLET/PLUG CAP		
31-1A226	For Inlets/Plugs Only. In order to achieve max water ingress protection of Type 3R/IP55, spring loaded caps should be ordered with inlets equipped with -A155 suffix.	

EASY RETROFIT ADAPTER PLATES		
see pg 246	Mount to existing boxes.	

RECEPTACLE LOCKING PIN		
LP-843	Requires Padlockable Pawl option (-843) on receptacle.	

DR50 Standard Duty - 50 A

UL/CSA Ratings

- **Max Amperage & Voltage**
  50 A, 600 VAC
- **Current Interruption Capability**
  For current interrupting up to 250 VAC
  For Switch-Rated devices, see DSN & DS sections.
- **Short Circuit Rating**
  100 kA
  Testing was performed with RK1 current limiting Mersen fuses sized at least 100% of the device's ampacity rating.
- **Environmental Ratings**
  Type 3R (Standard)
  Type 4X (Optional)
- **Temperature Range**
  Min -40°F/Max 140°F
  See pg 260 for temperatures outside of this range.
- **Wiring Capacity**
  Based on THHN wire sizes.
  Min 14 AWG Max 4 AWG
  Aux Contacts: Max 14 AWG
- **Certifications**
  UL 1682, CSA C22.2 NO. 182.1, NOM

Receptacle (female)



Inlet (male)



Remember to add installation accessories to your order

North American UL/CSA Configurations

VOLTAGE	POLARITY	PART # POLY	PART # POLY
120 V	1P+N+G	31-34235-K16	31-38235-K16
120 208 V	3P+N+G	31-34237-K16	31-38237-K16
125 V	1P+N+G	31-34175-K07	31-38175-K07
125 250 V	2P+N+G	31-34176-K07	31-38176-K07
208 V	2P+G	31-34232-K16	31-38232-K16
208 V	3P+G	31-34233-K16	31-38233-K16
250 V	2P+G	31-34172-K07	31-38172-K07
250 V	3P+G	31-34173-K07	31-38173-K07
277 V	1P+N+G	31-34245-K04	31-38245-K04
277 480 V	3P+N+G	31-34247-K04	31-38247-K04
347 600 V	3P+N+G	31-34187-K14	31-38187-K14
480 V	2P+G	31-34242-K04	31-38242-K04
480 V	3P+G	31-34243-K04	31-38243-K04
600 V	2P+G	31-34182-K14	31-38182-K14
600 V	3P+G	31-34183-K14	31-38183-K14

For international configurations and ratings (IEC, CE) visit meltric.com/international-catalog or contact Customer Service at 800-433-7642.

Main Options



Auxiliary/Pilot Contacts



Mushroom Pawl



Padlock Pawl



Self-Returning Lid
Recommended for cord applications to keep lid tucked in to avoid damage.

See pages 237-246 for detailed information on these options

RECEPTACLE OPTIONS	SUFFIX #	INLET OPTIONS	SUFFIX #
With 2 Auxiliary/Pilot Contacts	**Recept # -972**	With 2 Auxiliary/Pilot Contacts	**Inlet # -972**
With 3 Auxiliary/Pilot Contacts	**Recept # -973**	With 3 Auxiliary/Pilot Contacts	**Inlet # -973**
With 4 Auxiliary/Pilot Contacts	**Recept # -974**	With 4 Auxiliary/Pilot Contacts	**Inlet # -974**
Type 4X & Self-Returning Lid	**Recept # -4X**	Type 4X Watertightness	**Inlet # -4X**
Mushroom Pawl	**Recept # -375**	Without Lockout Hole	**Inlet # -A155**
Padlock Pawl	**Recept # -843**	For Microswitch	**Inlet # -270**[3,4]
Screw-Type Locking Pawl	**Recept # -845**		
Metal Pawl (on poly receptacle)	**Recept # -824**		
Self-Returning Lid (Manual Close)	**Recept # -NC**		
With Microswitch	**Recept # -270**[3,4]		

Notes:
[3] Not UL/CSA listed.
[4] Not available on 3P+N+G configurations.

Order Example: 480 V DR50 + 2 auxiliary contacts
DR50 Poly inlet 3P+G = 31-38243-K04***-972***

Handle Option Guide pgs 243-244

INSTALLATION ACCESSORIES – SIZE 3

When properly installed, all accessories meet or exceed the environmental ratings of the devices they are mounted to; unless otherwise noted.

HANDLES

HANDLE WITH NPT		PART # POLY	PART # METAL
 Poly / Metal	1/2"	513P0N05	593P0N05
	3/4"	513P0N07	593P0N07
	1"	513P0N10	593P0N10
	1 1/4"	513P0N12	593P0N12

For available cord grips, see pg 231.

POLY HANDLE WITH CORD GRIP	CABLE RANGE	PART #
	.520-.680"	713P0CP5
	.680-.980"	713P0DP4
	.980-1.260"	713P0EP4

METAL HANDLE WITH CORD GRIP		
	.635-.750"	793P0CS4
	.770-.850"	793P0DS1
	.875-1.000"	793P0DS3
	1.000-1.125"	793P0ES2

POLY HANDLE		
	.390-1.180"	513P0D30

POLY HANDLE WITH BUILT IN DRAWPLATES		
	.390-1.180"	513P0D30473

Makes connector closures easier.

POLY HANDLE WITH CLAMP & BUSHING		
	.750-.875"	713P0S14
	.875-1.000"	713P0S16
	1.000-1.125"	713P0S18
	1.125-1.250"	713P0S20
	1.250-1.375"	713P0S22

ANGLES

POLY ANGLE					
	30°	513M3		70°	513M7 Panel mounting only.

METAL ANGLE			
	0°	593M0	
	30°	593M3	
	FS/FD 30°	793M3FS	Base measures approximately 4.2" x 2.7". Due to the variation in sizes of FS boxes, please verify that your FS box matches our dimensions, if not call Customer Service for other solutions.
	70°	593M7	

BOXES

POLY CONDUIT ENTRY WITH NPT				
 * 13.5 in³	30°	3/4"	513B3N07	For poly devices only. * Interior volume with receptacle installed.
	30°	1"	513B3N10	

POLY WALL BOX WITH ANGLE			
 * 179.41 in³	70°		513C7000
		Ground Bar	51AA089

70° poly boxes are not drilled.

* Interior volume with receptacle installed.

POLY ANGLE WITH METAL BOX WITH NPT			
 * 177.7 in³	70°	1/2"	713C7N05
	70°	3/4"	713C7N07
	70°	1"	713C7N10
	70°	1 1/4"	713C7N12
	70°	1 1/2"	713C7N15

* Interior volume with receptacle installed.

METAL BOX WITH NPT		
	0°	1/2"	7T1F0N05
	0°	3/4"	7T1F0N07
	0°	1"	7T1F0N10
	0°	1 1/4"	7T1F0N12

POLY ANGLE WITH METAL BOX WITH NPT			
 * 29.6 in³	30°	1/2"	713C3N05
	30°	3/4"	713C3N07
	30°	1"	713C3N10
	30°	1 1/4"	713C3N12

For metal angle, replace "71" prefix with "79".

* Interior volume with receptacle installed.

NPT on top or bottom (if rotated). For other configurations, contact Customer Service.

MISCELLANEOUS ACCESSORIES

FINGER DRAWPLATES		
	61-6A346	Set of Two (2) Recommended for all assembly applications, for facilitated mating.

PROTECTIVE INLET/PLUG CAP		
	31-3A426	For Inlets/Plugs Only.

PADLOCKABLE INLET/PLUG CAP		
	DS3PC	Poly – For Inlets/Plugs Only.

SPRING-LOADED PADLOCKABLE INLET/PLUG CAP		
	31-3A226	For Inlets/Plugs Only. In order to achieve max water ingress protection of Type 3R/IP55, spring loaded caps should be ordered with inlets equipped with -A155 suffix.

EASY RETROFIT ADAPTER PLATES		
	see pg 246	Mount to existing boxes.

RECEPTACLE LOCKING PIN		
	LP-843	Requires Padlockable Pawl option (-843) on receptacle.

DR100 Standard Duty - 100 A

UL/CSA Ratings

- **Max Amperage & Voltage**
  100 A, 600 VAC
- **Current Interruption Capability**
  For current interrupting up to 250 VAC
  For Switch-Rated devices, see DSN & DS sections.
- **Short Circuit Rating**
  100 kA
  Testing was performed with RK1 current limiting Mersen fuses sized at least 100% of the device's ampacity rating.
- **Environmental Ratings**
  Type 4X/IP66/IP67/IP69/IP69K
- **Temperature Range**
  Min -40°F/Max 140°F
  See pg 260 for temperatures outside of this range.
- **Wiring Capacity**
  Based on THHN wire sizes.
  Min 10 AWG Max 2 AWG
  Aux Contacts: Max 14 AWG
- **Certifications**
  UL 1682, CSA C22.2 NO. 182.1, NOM

Receptacle (female)



Inlet (male)



! Remember to add installation accessories to your order

North American UL/CSA Configurations

NOTE: Poly devices should not be inter-mated with metal devices

VOLTAGE	POLARITY	PART # POLY	PART # METAL	PART # POLY	PART # METAL
120 V	1P+N+G	31-64235-K16	39-64235-K16	31-68235-K16	39-68235-K16
120 208 V	3P+N+G	31-64237-K16	39-64237-K16	31-68237-K16	39-68237-K16
125 V	1P+N+G	31-64175-K07	39-64175-K07	31-68175-K07	39-68175-K07
125 250 V	2P+N+G	31-64176-K07	39-64176-K07	31-68176-K07	39-68176-K07
208 V	2P+G	31-64232-K16	39-64232-K16	31-68232-K16	39-68232-K16
208 V	3P+G	31-64233-K16	39-64233-K16	31-68233-K16	39-68233-K16
250 V	2P+G	31-64172-K07	39-64172-K07	31-68172-K07	39-68172-K07
250 V	3P+G	31-64173-K07	39-64173-K07	31-68173-K07	39-68173-K07
277 V	1P+N+G	31-64245-K04	39-64245-K04	31-68245-K04	39-68245-K04
277 480 V	3P+N+G	31-64247-K04	39-64247-K04	31-68247-K04	39-68247-K04
347 600 V	3P+N+G	31-64187-K14	39-64187-K14	31-68187-K14	39-68187-K14
480 V	2P+G	31-64242-K04	39-64242-K04	31-68242-K04	39-68242-K04
480 V	3P+G	31-64243-K04	39-64243-K04	31-68243-K04	39-68243-K04
600 V	2P+G	31-64182-K14	39-64182-K14	31-68182-K14	39-68182-K14
600 V	3P+G	31-64183-K14	39-64183-K14	31-68183-K14	39-68183-K14

For international configurations and ratings (IEC, CE) visit meltric.com/international-catalog or contact Customer Service at 800-433-7642.

Main Options



Auxiliary/Pilot Contacts



Mushroom Pawl



Padlock Pawl



Self-Returning Lid
Recommended for cord applications to keep lid tucked in to avoid damage.

RECEPTACLE OPTIONS	SUFFIX #	INLET OPTIONS	SUFFIX #
With 2 Auxiliary/Pilot Contacts	**Recept # -972**	With 2 Auxiliary/Pilot Contacts	**Inlet # -972**
With 3 Auxiliary/Pilot Contacts	**Recept # -263**	With 3 Auxiliary/Pilot Contacts	**Inlet # -263**
With 4 Auxiliary/Pilot Contacts	**Recept # -264**	With 4 Auxiliary/Pilot Contacts	**Inlet # -264**
Mushroom Pawl	**Recept # -375**	Without Lockout Hole	**Inlet # -A155**
Padlock Pawl	**Recept # -843**	For Microswitch	**Inlet # -270**[3,4]
Screw-Type Locking Pawl	**Recept # -845**		
Metal Pawl (on poly receptacle)	**Recept # -824**		
Self-Returning Lid (Manual Close)	**Recept # -NC**		
With Microswitch	**Recept # -270**[3,4]		

Note:
[3] Not UL/CSA listed.
[4] Not available on 3P+N+G configurations.

! See pages 237-246 for detailed information on these options

Order Example: 480 V DR100 + 2 auxiliary contacts
DR100 Poly inlet 3P+G = 31-68243-K04***-972***

Handle Option Guide pgs 243-244

INSTALLATION ACCESSORIES – SIZE 4

When properly installed, all accessories meet or exceed the environmental ratings of the devices they are mounted to; unless otherwise noted.

HANDLES

HANDLE WITH NPT		PART # POLY	PART # METAL
 Poly / Metal	1/2"	514P0N05	594P0N05
	3/4"	514P0N07	594P0N07
	1"	514P0N10	594P0N10
	1 1/4"	514P0N12	594P0N12
	1 1/2"	514P0N15	594P0N15

For available cord grips, see pg 231.

POLY HANDLE WITH CORD GRIP	CABLE RANGE	PART #
	.680-.980"	714P0DP4
	.980-1.260"	714P0EP4
	1.260-1.560"	714P0FP1

METAL HANDLE WITH CORD GRIP		
	.750-.875"	794P0DS1
	.875-1.000"	794P0DS3
	1.000-1.125"	794P0ES2
	1.125-1.250"	794P0FS0
	1.250-1.375"	794P0FS1
	1.375-1.438"	794P0FS4
	1.438-1.562"	794P0FS2*
	1.562-1.688"	794P0FS3*

*May require stripping of cable jacket.

POLY HANDLE		
	.511-1.377"	514P0D35

POLY HANDLE WITH BUILT IN DRAWPLATES		
	.511-1.377"	514P0D35473

Makes connector closures easier.

SANTOPRENE HANDLE		
	.551-.787"	554P0D20L
	.708-.984"	554P0D25L
	.984-1.377"	554P0D35L
	1.377-1.771"	554P0D45L
	1.771-1.929"	554P0D49L

ANGLES

POLY ANGLE				
	30°	514M3	 70°	514M7 Panel mounting only.

METAL ANGLE			
	0°	594M0	
	30°	594M3	
	30°	794M3L	
	30° Oversized	794M3	Mounts on oversize box only. Order with 7T5F0Nxx. See pg 98.
	70°	594M7	

BOXES

POLY CONDUIT ENTRY WITH NPT			
 * 27.7 in³	30°	1/2"	514B3N05
	30°	3/4"	514B3N07
	30°	1"	514B3N10
	30°	1 1/4"	514B3N12

For poly devices only.

* Interior volume with receptacle installed.

POLY WALL BOX WITH ANGLE			
 * 181.24 in³	70°		514C7000
		Ground Bar	51AA089

70° poly boxes are not drilled.

* Interior volume with receptacle installed.

POLY ANGLE WITH METAL BOX WITH NPT			
 * 177.7 in³	70°	1/2"	714C7N05
	70°	3/4"	714C7N07
	70°	1"	714C7N10
	70°	1 1/4"	714C7N12
	70°	1 1/2"	714C7N15

* Interior volume with receptacle installed.

METAL BOX WITH NPT			
	0°	1"	7T4F0N10
	0°	1 1/4"	7T4F0N12
	0°	1 1/2"	7T4F0N15
	0°	2"	7T4F0N20

POLY ANGLE WITH METAL BOX WITH NPT			
 * 61.0 in³ Poly Angle * 59.4 in³ Metal Angle	30°	1"	714C3N10
	30°	1 1/4"	714C3N12
	30°	1 1/2"	714C3N15
	30°	2"	714C3N20

For metal angle, replace "71" prefix with "79".

* Interior volume with receptacle installed.

NPT on top or bottom (if rotated). For other configurations, contact Customer Service.

MISCELLANEOUS ACCESSORIES

FINGER DRAWPLATES		
	31-6A346	Set of Two (2) Recommended for all assembly applications, for facilitated mating.

PROTECTIVE INLET/PLUG CAP		
	31-6A426	For Inlets/Plugs Only.

PADLOCKABLE INLET/PLUG CAP		
	DS6PC	Poly – For Inlets/Plugs Only.
	DS6MC	Aluminum – For Inlets/Plugs Only. -A155 suffix required on inlet part # to retain water ingress protection.

SPRING-LOADED PADLOCKABLE INLET/PLUG CAP			
	31-6A226	For Poly Inlets/Plugs Only.	In order to achieve max water ingress protection of Type 3R/IP55, spring loaded caps should be ordered with inlets equipped with -A155 suffix.
	39-6A226	For Metal Inlets/Plugs Only.	

RECEPTACLE LOCKING PIN		
	LP-843	Requires Padlockable Pawl option (-843) on receptacle.

DR150 Standard Duty - 150 A

UL/CSA Ratings

- **Max Amperage & Voltage**
  150 A, 600 VAC
- **Current Interruption Capability**
  For current interrupting up to 250 VAC
  For Switch-Rated devices, see DSN & DS sections.
- **Short Circuit Rating**
  65 kA
  Testing was performed with RK1 current limiting Mersen fuses sized at least 100% of the device's ampacity rating.
- **Environmental Ratings**
  Type 4X/IP66/IP67/IP69/IP69K
- **Temperature Range**
  Min -40°F/Max 140°F
  See pg 260 for temperatures outside of this range.
- **Wiring Capacity**
  Based on THHN wire sizes
  Min 4 AWG Max 2/0 AWG
  Aux Contacts: Max 14 AWG
- **Certifications**
  UL 1682, CSA C22.2 NO. 182.1, NOM

Receptacle (female) **Inlet (male)**



Remember to add installation accessories to your order

North American UL/CSA Configurations

NOTE: Poly devices should not be inter-mated with metal devices

VOLTAGE	POLARITY	PART # POLY	PART # METAL	PART # POLY	PART # METAL
120 V	1P+N+G	31-94235-K16	39-94235-K16	31-98235-K16	39-98235-K16
120 208 V	3P+N+G	31-94237-K16	39-94237-K16	31-98237-K16	39-98237-K16
125 V	1P+N+G	31-94175-K07	39-94175-K07	31-98175-K07	39-98175-K07
125 250 V	2P+N+G	31-94176-K07	39-94176-K07	31-98176-K07	39-98176-K07
208 V	2P+G	31-94232-K16	39-94232-K16	31-98232-K16	39-98232-K16
208 V	3P+G	31-94233-K16	39-94233-K16	31-98233-K16	39-98233-K16
250 V	2P+G	31-94172-K07	39-94172-K07	31-98172-K07	39-98172-K07
250 V	3P+G	31-94173-K07	39-94173-K07	31-98173-K07	39-98173-K07
277 V	1P+N+G	31-94245-K04	39-94245-K04	31-98245-K04	39-98245-K04
277 480 V	3P+N+G	31-94247-K04	39-94247-K04	31-98247-K04	39-98247-K04
347 600 V	3P+N+G	31-94187-K14	39-94187-K14	31-98187-K14	39-98187-K14
480 V	2P+G	31-94242-K04	39-94242-K04	31-98242-K04	39-98242-K04
480 V	3P+G	31-94243-K04	39-94243-K04	31-98243-K04	39-98243-K04
600 V	2P+G	31-94182-K14	39-94182-K14	31-98182-K14	39-98182-K14
600 V	3P+G	31-94183-K14	39-94183-K14	31-98183-K14	39-98183-K14

For international configurations and ratings (IEC, CE) visit meltric.com/international-catalog or contact Customer Service at 800-433-7642.

Main Options



Auxiliary/Pilot Contacts



Mushroom Pawl



Padlock Pawl



Self-Returning Lid
Recommended for cord applications to keep lid tucked in to avoid damage.

RECEPTACLE OPTIONS	SUFFIX #	INLET OPTIONS	SUFFIX #
With 2 Auxiliary/Pilot Contacts	**Recept # -262**	With 2 Auxiliary/Pilot Contacts	**Inlet # -262**
With 4 Auxiliary/Pilot Contacts	**Recept # -264**	With 4 Auxiliary/Pilot Contacts	**Inlet # -264**
With 6 Auxiliary/Pilot Contacts	**Recept # -976**	With 6 Auxiliary/Pilot Contacts	**Inlet # -976**
Mushroom Pawl	**Recept # -375**	Without Lockout Hole	**Inlet # -A155**
Padlock Pawl	**Recept # -843**	For Microswitch	**Inlet # -270**[3,4]
Screw-Type Locking Pawl	**Recept # -845**		
Metal Pawl (on poly receptacle)	**Recept # -824**		
Self-Returning Lid (Manual Close)	**Recept # -NC**		
With Microswitch	**Recept # -270**[3,4]		

Notes:

[3] Not UL/CSA listed.

[4] Not available on 3P+N+G configurations.

See pages 237-246 for detailed information on these options

Order Example: 480 V DR150 + 2 auxiliary contacts
DR150 Poly inlet 3P+G = 31-98243-K04***-972***

Handle Option Guide pgs 243-244

INSTALLATION ACCESSORIES – SIZE 5

When properly installed, all accessories meet or exceed the environmental ratings of the devices they are mounted to; unless otherwise noted.

HANDLES

HANDLE WITH NPT		PART # POLY	PART # METAL
 Poly / Metal	3/4"	515P0N07	595P0N07
	1"	515P0N10	595P0N10
	1 1/4"	515P0N12	595P0N12
	1 1/2"	515P0N15	595P0N15
	2"	515P0N20	595P0N20

For available cord grips, see pg 231.

POLY HANDLE WITH CORD GRIP	CABLE RANGE	PART #
	.980-1.260"	715P0EP4
	1.260-1.560"	715P0FP1
	1.520-1.860"	715P0GP2

METAL HANDLE WITH CORD GRIP		
	1.250-1.375"	795P0FS1
	1.438-1.562"	795P0FS2*
	1.562-1.688"	795P0FS3*
	1.688-1.812"	795P0GS1

*May require stripping of cable jacket.

OVERSIZED METAL HANDLE WITH NPT	
	3/4" 795P0N07
	1" 795P0N10
	1 1/4" 795P0N12
	1 1/2" 795P0N15
	2" 795P0N20
	2 1/2" 795P0N25

For available cord grips, see pg 231.

SANTOPRENE HANDLE		
	.708-.984"	555P0D25
	.984-1.377"	555P0D35
	1.377-1.771"	555P0D45
	1.771-1.929"	555P0D49

BOXES

POLY ANGLE WITH METAL BOX WITH NPT				
 * 108.7 in^3	30°	1 1/4"	715C3N12	* Interior volume with receptacle installed.
	30°	1 1/2"	715C3N15	
	30°	2"	715C3N20	
	30°	2 1/2"	715C3N25	

METAL ANGLE WITH METAL BOX WITH NPT				
 * 111.8 in^3	30°	1 1/4"	795C3N12	* Interior volume with receptacle installed.
	30°	1 1/2"	795C3N15	
	30°	2"	795C3N20	
	30°	2 1/2"	795C3N25	

METAL BOX WITH NPT			
	0°	1 1/4"	7T5F0N12
	0°	1 1/2"	7T5F0N15
	0°	2"	7T5F0N20
	0°	2 1/2"	7T5F0N25

NPT on top or bottom (if rotated). For other configurations, contact Customer Service.

ANGLES

POLY ANGLE		
	30°	515M3

METAL ANGLE			
	0°	595M0	
	30°	595M3	
	30° Oversized	795M3	Mounts on oversize metal box only. Order with 7T6F0N25XL. See pg 100.
	70°	595M7	

MISCELLANEOUS ACCESSORIES

PROTECTIVE INLET/PLUG CAP		
	31-9A426	For Inlets/Plugs Only. Covers lockout hole for watertight seal on inlet. Consult Customer Service for availability.

PADLOCKABLE INLET/PLUG CAP		
	DS9MC	Aluminum – For Inlets/Plugs Only. -A155 suffix required on inlet part # to retain water ingress protection.

CORD GRIP WITH OPTIONS	
	see pg 231

EASY RETROFIT ADAPTER PLATES		
	see pg 246	Mount to existing boxes.

RECEPTACLE LOCKING PIN		
	LP-843	Requires Padlockable Pawl option (-843) on receptacle.

DR250 Standard Duty - 250 A

UL/CSA Ratings

- **Max Amperage & Voltage**
  250 A, 600 VAC
- **Current Interruption Capability**
  Not for current interrupting
  For Switch-Rated devices, see DSN & DS sections.
- **Short Circuit Rating**
  10 kA
  Testing was performed with RK1 current limiting Mersen fuses sized at least 100% of the device's ampacity rating.
- **Environmental Ratings**
  Type 4X/IP66/IP67/IP69/IP69K
- **Temperature Range**
  Min -40°F/Max 140°F
  See pg 260 for temperatures outside of this range.
- **Wiring Capacity**
  Based on THHN wire sizes
  Min 4 AWG Max 4/0 AWG
  Aux Contacts: Max 14 AWG
- **Certifications**
  UL 1682, CSA C22.2 NO. 182.1, NOM

Receptacle (female)



Inlet (male)



Remember to add installation accessories to your order

North American UL/CSA Configurations

VOLTAGE	POLARITY	PART # METAL	PART # METAL
120 V	1P+N+G	39-24235-K16	39-28235-K16
120 208 V	3P+N+G	39-24237-K16	39-28237-K16
125 V	1P+N+G	39-24035-K07	39-28035-K07
125 250 V	2P+N+G	39-24036-K07	39-28036-K07
208 V	2P+G	39-24232-K16	39-28232-K16
208 V	3P+G	39-24233-K16	39-28233-K16
250 V	2P+G	39-24032-K07	39-28032-K07
250 V	3P+G	39-24033-K07	39-28033-K07
277 V	1P+N+G	39-24245-K04	39-28245-K04
277 480 V	3P+N+G	39-24247-K04	39-28247-K04
347 600 V	3P+N+G	39-24027-K14	39-28027-K14
480 V	2P+G	39-24242-K04	39-28242-K04
480 V	3P+G	39-24243-K04	39-28243-K04
600 V	2P+G	39-24022-K14	39-28022-K14
600 V	3P+G	39-24023-K14	39-28023-K14

For international configurations and ratings (IEC, CE) visit meltric.com/international-catalog or contact Customer Service at 800-433-7642.

Main Options



Auxiliary/Pilot Contacts



Mushroom Pawl



Padlock Pawl



Self-Returning Lid
Recommended for cord applications to keep lid tucked in to avoid damage.

See pages 237-246 for detailed information on these options

RECEPTACLE OPTIONS	SUFFIX #	INLET OPTIONS	SUFFIX #
With 2 Auxiliary/Pilot Contacts	**Recept # -972**[7]	With 2 Auxiliary/Pilot Contacts	**Inlet # -972**[7]
With 4 Auxiliary/Pilot Contacts	**Recept # -174**[6]	With 4 Auxiliary/Pilot Contacts	**Inlet # -174**[6]
With 6 Auxiliary/Pilot Contacts	**Recept # -976**[6]	With 6 Auxiliary/Pilot Contacts	**Inlet # -976**[6]
Mushroom Pawl	**Recept # -375**	For Microswitch	**Inlet # -270**[3,4]
Padlock Pawl	**Recept # -843**	Without Lockout Hole	**Inlet # -A155**
Screw-Type Locking Pawl	**Recept # -845**		
Self-Returning Lid (Manual Close)	**Recept # -NC**		
With Microswitch	**Recept # -270**[3,4]		
Electro-Mechanical Locking System)	**Recept # MIL**		

Notes:

[3] Not UL/CSA listed.
[4] Not available on 3P+N+G configurations.
[6] This option not available with N contact.
[7] Customers needing to maintain compatibility with old style -172 auxiliary contacts should use a -172 suffix.

Order Example: 480 V DR250 + 2 auxiliary contacts
DR250 Metal inlet 3P+G = 39-28243-K04-***972***

Handle Option Guide pgs 243-244

INSTALLATION ACCESSORIES – SIZE 6

When properly installed, all accessories meet or exceed the environmental ratings of the devices they are mounted to; unless otherwise noted.

HANDLES

HANDLE WITH NPT		PART # POLY	PART # METAL
 Poly	1"	516P0N10	596P0N10
	1 1/4"	516P0N12	596P0N12
	1 1/2"	516P0N15	596P0N15
 Metal	2"	516P0N20	596P0N20
	2 1/2"	516P0N25	596P0N25
	3"	-	596P0N30

For available cord grips, see pg 231.

POLY HANDLE WITH CORD GRIP	CABLE RANGE	PART #
	1.520-1.860"	716P0GP2
	1.850-2.190"	716P0GP3*

*May require stripping of cable jacket.

METAL HANDLE WITH CORD GRIP	CABLE RANGE	PART #
	1.688-1.812"	796P0GS1
	1.812-1.938"	796P0GS2*
	1.938-2.062"	796P0JS1
	2.062-2.188"	796P0JS2
	2.188-2.312"	796P0JS3
	2.312-2.438"	796P0JS4*
	2.437-2.625"	796P0KS1
	2.625-2.812"	796P0KS2

*May require stripping of cable jacket.

STRAIGHT HANDLE	CABLE RANGE	PART #	NPT	PART #
Bolt-on Clamp 	1.57-1.97"	5K6P0D50	1 1/2"	5K6P0N15L
	2.01-2.36"	5K6P0D60	2"	5K6P0N20L
NPT 	2.40-2.76"	5K6P0D70	2 1/2"	5K6P0N25L
	2.79-3.15"	5K6P0D80	3"	5K6P0N30L

OVERSIZED METAL HANDLE WITH NPT		
	1 1/2"	796P0N15
	2"	796P0N20
	2 1/2"	796P0N25
	3"	796P0N30

For available cord grips, see pg. 231.

SANTOPRENE HANDLE		
	.984-1.377"	556P0D35
	1.377-1.771"	556P0D45
	1.771-1.929"	556P0D49

ANGLES

METAL ANGLE		
	0°	596M0
	45°	796M4
	60°	596M6
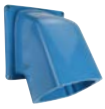	60° Extended	597M6

Mounts on oversize metal box only.

BOXES

METAL ANGLE WITH METAL BOX WITH NPT			PART #
 * 248.4 in^3	60°	1 1/2"	796C6N15
	60°	2"	796C6N20
	60°	2 1/2"	796C6N25

* Interior volume with receptacle installed.

METAL BOX WITH NPT			
	0°	1 1/2"	7T6F0N15
	0°	2"	7T6F0N20
	0°	2 1/2"	7T6F0N25

METAL OVERSIZED BOX WITH NPT			
	0°	2"	7T6F0N20XL
	0°	2 1/2"	7T6F0N25XL
	0°	3"	7T6F0N30XL

NPT on top or bottom (if rotated). For other configurations, contact Customer Service.

MISCELLANEOUS ACCESSORIES

PROTECTIVE INLET/PLUG CAP		
	39-2A426	Covers lockout hole for watertight seal on inlet. Consult Customer Service for availability. For Inlets/Plugs Only.

PADLOCKABLE INLET/PLUG CAP		
	DS2MC	Aluminum – For Inlets/Plugs Only. -A155 suffix required on inlet part # to retain water ingress protection.

CORD GRIP WITH OPTIONS		
	see pg 231	

RECEPTACLE LOCKING PIN		
	LP-843	Requires Padlockable Pawl option (-843) on receptacle.

DR Spare Parts

Male Configuration

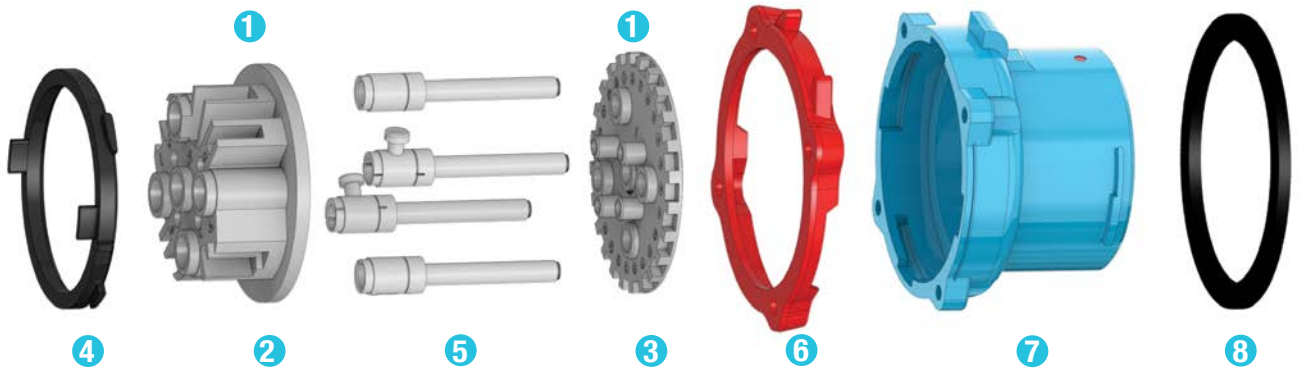

		DR30 POLY	DR50 POLY	DR100 POLY	DR100 METAL	DR150 POLY	DR150 METAL	DR250 METAL
1 Plug Insulator (Top & Bottom)		31-1A010*	31-3A010*	31-6A010*	39-6A010*	31-9A010*	39-9A010*	39-2A010*
2 Insulator Bottom		31-1A010-B	31-3A010-B	31-6A010-B	39-6A010-B	31-9A010-B	39-9A010-B	39-2A010-B
3 Insulator Top		31-1A010-T*	31-3A010-T*	31-6A010-T*	39-6A010-T	31-9A010-T*	39-9A010-T*	39-2A010-T*
4 Locking Ring		31-1A583	31-3A583	31-6A583	39-6A583	31-9A583	39-9A583	39-2A583
5 Plug Phase Contact		31-1A011	31-3A011	31-6A011	39-6A011	31-9A011	39-9A011	39-2A011
5 Plug Pilot Contact		31-1A011-972	31-3A011-972	31-6A011-972	39-6A011-972	31-9A011-972	39-9A011-972	39-2A011-972
5 Plug Ground Contact		31-1A019	31-3A019	31-6A019	39-6A019	31-9A019	39-9A019	39-2A019
6 Color-Coded Voltage Gasket		31-1AJ26	31-3AJ26	31-6AJ26	39-6AJ26	31-9AJ26	39-9AJ26	39-2AJ26
		31-1AC26	31-3AC26	31-6AC26	39-6AC26	31-9AC26	39-9AC26	39-2AC26
		31-1AB26	31-3AB26	31-6AB26	39-6AB26	31-9AB26	39-9AB26	39-2AB26
		31-1AR26	31-3AR26	31-6AR26	39-6AR26	31-9AR26	39-9AR26	39-2AR26
		31-1AN26	31-3AN26	31-6AN26	39-6AN26	31-9AN26	39-9AN26	39-2AN26
7 Plug Casing		31-1A014*	31-3A014*	31-6A014*	39-6A014	31-9A014*	39-9A014*	39-2A014*
8 Type 4X Gasket		31-1A056	31-3A056	-	-	-	-	-

*** Please provide full part number for accurate part alignment**

Part numbers in catalog are for current revisions, others may be available upon request.

For replacement parts contact Customer Service at 800-433-7642.

Female Configuration

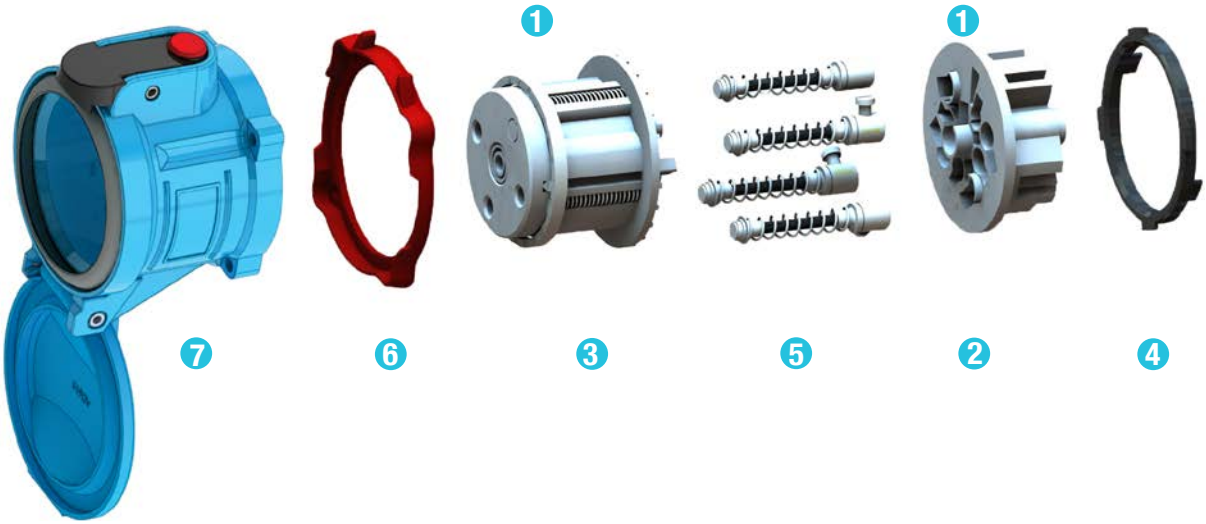

		DR30 POLY	DR50 POLY	DR100 POLY	DR100 METAL	DR150 POLY	DR150 METAL	DR250 METAL
1	Receptacle Insulator (Top and Bottom)	31-1A020*	31-3A020*	31-6A020*	39-6A020*	31-9A020*	39-9A020*	39-2A020*
2	Insulator Bottom	31-1A020-B	31-3A320	31-6A020-B	39-6A020-B	31-9A020-B	39-9A020-B	39-2A020-B
3	Insulator Top	31-1A020-T*	31-3A020-T*	31-6A020-T*	39-6A020-T*	31-9A020-T*	39-9A020-T*	39-2A020-T*
4	Locking Ring	31-1A583	31-3A583	31-6A583	39-6A583	31-9A583	39-9A583	39-2A583
5	Receptacle Phase Contact	31-1A021	31-3A021	31-6A021	39-6A021	31-9A021	39-9A021	39-2A021
5	Receptacle Pilot Contact	31-1A021-972	31-3A021-972	31-6A021-972	39-6A021-972	31-9A021-972	39-9A021-972	39-2A021-972
5	Receptacle Ground Contact	31-1A029	31-3A029	31-6A029	39-6A029	31-9A029	39-9A029	39-2A029
6	Color-Coded Voltage Gasket	31-1AJ26	31-3AJ26	31-6AJ26	39-6AJ26	31-9AJ26	39-9AJ26	39-2AJ26
		31-1AC26	31-3AC26	31-6AC26	39-6AC26	31-9AC26	39-9AC26	39-2AC26
		31-1AB26	31-3AB26	31-6AB26	39-6AB26	31-9AB26	39-9AB26	39-2AB26
		31-1AR26	31-3AR26	31-6AR26	39-6AR26	31-9AR26	39-9AR26	39-2AR26
		31-1AN26	31-3AN26	31-6AN26	39-6AN26	31-9AN26	39-9AN26	39-2AN26
7	Receptacle Casing (as shown)	31-1A024*	31-3A024*	31-6A024*	39-6A024*	31-9A024*	39-9A024*	39-2A024*
	Lid Replacement Kit	31-1A125	31-3A125	31-6A125	39-6A925	31-9A125	39-9A925	39-2A925
	Pawl Replacement Kit Polyester	31-1A824	31-3A824	31-6A824	-	31-9A824	-	-
	Pawl Replacement Kit Metal	31-1A924	31-3A924	31-6A924	39-6A824	31-9A924	39-9A824	39-2A824
	Drawbar Replacement Kit	-	-	-	-	31-9A726	39-9A726	39-2A726

*** Please provide full part number for accurate part alignment**

Part numbers in catalog are for current revisions, others may be available upon request.

For replacement parts contact Customer Service at 800-433-7642.

DR DIMENSIONS – Provided in Inches

SCAN ME >>

Dimensions are for reference only and may change depending on accessories used. For precise dimensions contact MELTRIC Engineering.

Plug

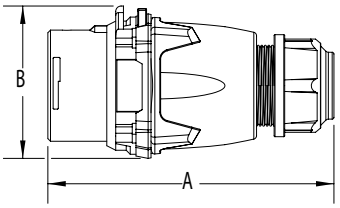

Inlet

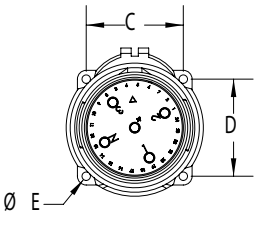

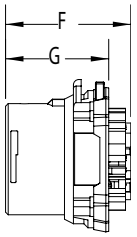

PRODUCT	A	B	C	D	øE	F	G
DR30	5.72	2.79	1.89	1.89	0.20	2.28	1.86
DR50	6.15	3.23	2.17	2.17	0.20	2.93	2.07
DR100/DR7c	6.70	3.77	2.59	2.59	0.24	3.42	2.38
DR150	8.33	4.59	3.20	3.20	0.24	4.14	3.04
DR250	10.30	5.67	3.86	3.86	0.26	4.66	3.20

Connector

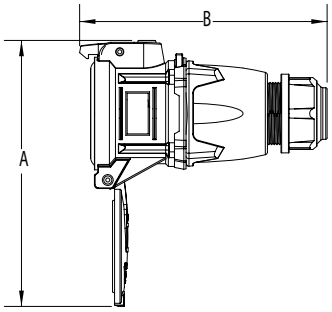

Receptacle

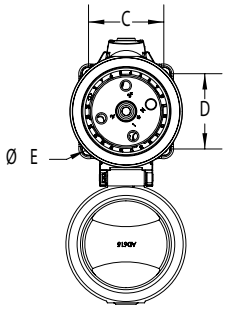

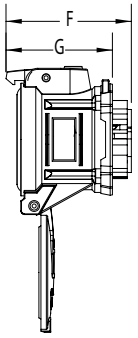

Extended Draw bars

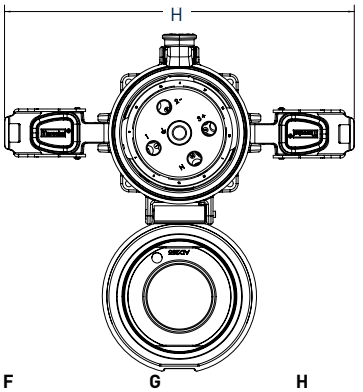

PRODUCT	A	B	C	D	øE	F	G	H
DR30	6.32	6.38	1.89	1.89	0.20	3.30	2.6	N/A
DR50	7.16	6.93	2.17	2.17	0.20	3.73	2.87	N/A
DR100/DR7c	8.46	7.90	2.59	2.59	0.22	4.53	3.37	N/A
DR150	11.04	10.02	3.20	3.20	0.23	5.71	4.74	11.25
DR250	12.70	10.87	3.86	3.86	0.26	6.21	4.75	12.07

Box/30° Angle/ Receptacle/Plug

Dimensions for DR250 include 60° angle.

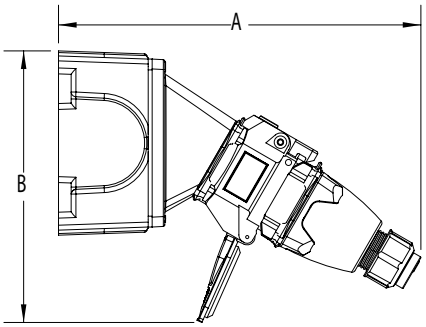

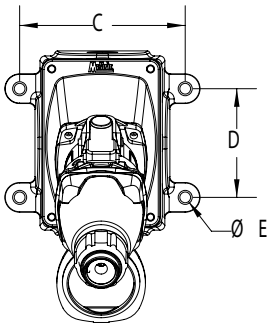

PRODUCT	A	B	C	D	øE
DR30	9.85	7.60	4.19	2.75	0.27
DR50	10.48	8.20	4.19	2.75	0.27
DR100/DR7c	11.87	10.74	5.00	3.81	0.33
DR150	16.06	10.33	6.75	4.25	0.31
DR250	15.76	12.70	8.13	6.38	0.31

30° Angle/Receptacle/Plug

Dimensions for DR250 include 60° angle.

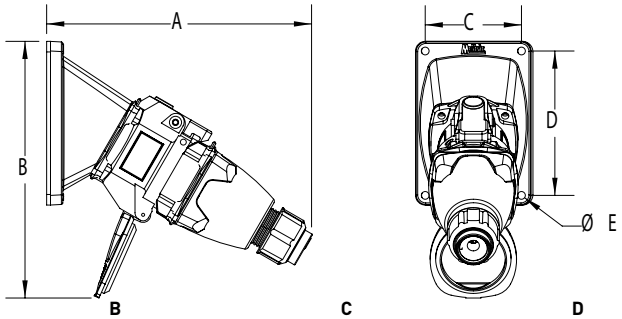

PRODUCT	A	B	C	D	øE
DR30	7.60	7.87	2.50	3.75	0.22
DR50	8.19	8.44	2.50	3.75	0.22
DR100/DR7c	9.17	10.45	3.43	4.83	0.26
DR150	14.09	12.05	4.83	4.83	0.28
DR250	11.61	16.20	6.50	6.50	0.25

70° Wall Box/ Receptacle

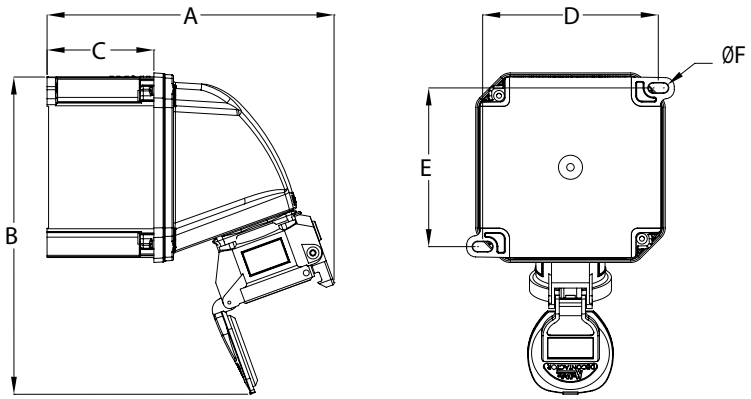

PRODUCT	A	B	C	D	E	øF
DR30	7.51	8.30	2.80	4.60	4.15	0.26
DR50	7.93	9.51	2.80	4.60	4.15	0.26
DR100/DR7c*	9.07	12.70	2.80	6.17	5.73	0.26

* Box has 4 mounting feet

Plug/Connector

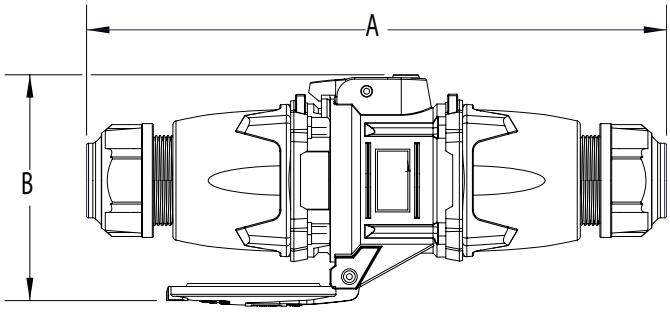

PRODUCT	A	B
DR30	10.20	4.61
DR50	10.91	5.71
DR100/DR7c	12.17	6.57
DR150	19.53	8.03
DR250	23.15	8.00

PN
Standard Duty

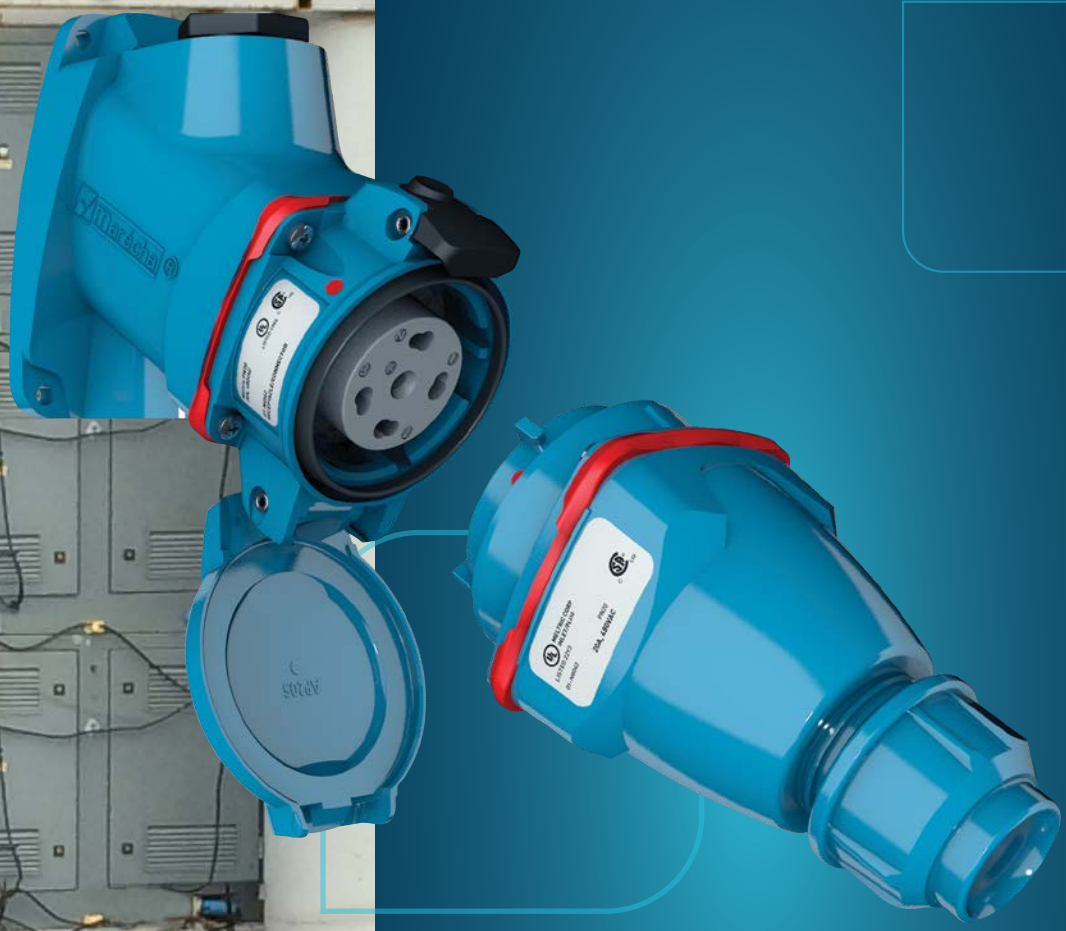

Main Advantages

- Compact yet durable device
- Spring-loaded, silver-nickel contacts
- Spring-assisted elliptical deforming ring at terminals are unaffected by vibrations and thermal cycling

- Features and Ratings p. 106
- PN20 p. 107
- Spare Parts p. 109
- Dimensions p. 111

SCAN ME >>

PRODUCT FEATURES



Casing

Metal or Fiberglass reinforced thermoplastic polyamide material offers great resistance to impact, corrosion and harsh environmental conditions..

Spring-Loaded Butt-Style Contacts

Ensures optimal contact force and superior electrical performance over thousands of operations.



Spring-Assisted Screw Terminals

Patented design ensures "Tighten and Forget" confidence. (not shown)

Lid

Provides additional protection from harsh environments.

Silver-Nickel Contact Material

Solid, silver-nickel contact surfaces provide superior conductivity, durability and corrosion resistance.

General Ratings

Amperage	20 A
Voltage	600 VAC Max
Frequency	60-400 Hz
Environmental	4X/IP66/IP67
Temperature	Min -40°F/Max 140°F (465° PNHT pg. 113)

Current Interruption Listings

Model	Current Interruption Capabilities
PN20	For current interrupting

Highlighted Feature

PN Contact



PN devices feature silver-nickel, spring-loaded, butt-style contacts for superior durability and electrical performance.

Listings

Category	UL	CSA	IEC	NOM
Plugs and Receptacles	UL 1682	C22.2 No. 182.1	60309-1	NOM-003-SCFI-2014

Operating Instructions



To break the circuit and remove the plug, press the pawl, apply inward force and rotate the plug clockwise.



The plug can be safely withdrawn from the receptacle. The plug contacts remain shrouded until after the circuit is broken.



To reconnect, align the red dots on the plug and receptacle bodies, insert plug into the receptacle, apply insertion force and rotate the plug 20° counterclockwise.

PN20 Compact - 20 A

UL/CSA Ratings

- **Max Amperage & Voltage**
  20 A, 600 VAC
- **Current Interruption Capability**
  20 A Current Interrupting (up to 480 VAC)
  15 A Current Interrupting (600 VAC)
- **Environmental Ratings**
  Type 4X/IP66/IP67
- **Temperature Range**
  Min -40°F/Max 140°F
  See pg 260 for temperatures outside of this range.
- **Wiring Capacity**
  Based on THHN wire sizes.
  Min 14 AWG Max 8 AWG
- **Certifications**
  UL 1682, CSA C22.2 NO. 182.1, NOM

Receptacle
female



Inlet
male



! Remember to add installation accessories to your order

North American UL/CSA Configurations

NOTE: Poly devices should not be inter-mated with metal devices

VOLTAGE	POLARITY	PART #		PART #	
		POLY	METAL	POLY	METAL
120 V	1P+N+G	01-N4165	09-N4165	01-N8165	09-N8165
120 208 V	3P+N+G	01-N4167	09-N4167	01-N8167	09-N8167
125 V	1P+N+G	01-N4075	09-N4075	01-N8075	09-N8075
125 250 V	2P+N+G	01-N4076	09-N4076	01-N8076	09-N8076
208 V	2P+G	01-N4162	09-N4162	01-N8162	09-N8162
208 V	3P+G	01-N4163	09-N4163	01-N8163	09-N8163
250 V	2P+G	01-N4072	09-N4072	01-N8072	09-N8072
250 V	3P+G	01-N4073	09-N4073	01-N8073	09-N8073
277 V	1P+N+G	01-N4045	09-N4045	01-N8045	09-N8045
277 480 V	3P+N+G	01-N4047	09-N4047	01-N8047	09-N8047
347 600 V	3P+N+G	01-N4147	09-N4147	01-N8147	09-N8147
480 V	2P+G	01-N4042	09-N4042	01-N8042	09-N8042
480 V	3P+G	01-N4043	09-N4043	01-N8043	09-N8043
600 V	2P+G	01-N4142	09-N4142	01-N8142	09-N8142
600 V	3P+G	01-N4143	09-N4143	01-N8143	09-N8143

Notes: 600V devices are rated for current interrupting up to 15 A only.

For international configurations and ratings (IEC, CE) visit meltric.com/international-catalog or contact Customer Service at 800-433-7642.

Main Options



Reverse Interiors



Flush Mount
(replaces female casing)



Locking Pawl

! See pages 237-246 for detailed information on these options

RECEPTACLE OPTIONS	SUFFIX #	INLET OPTIONS	SUFFIX #
Reverse Interiors	**Recept # -001**	Reverse Interiors	**Inlet # -001**
With Flush Mount (poly only)	**Recept # -142+**		
Locking Pawl	**Recept # -824-300**		
Self-Returning Lid (Manual Close)	**Recept # -NC**		

Notes: + no environmental rating

Order Example: 480 V PN20 + reverse interiors

Receptacle: PN20 Receptacle 3P+G=01-N4043-***001***
Example shows a receptacle casing with male contacts.



Handle Option Guide pgs 243-244

INSTALLATION ACCESSORIES – SIZE 1

When properly installed, all accessories meet or exceed the environmental ratings of the devices they are mounted to; unless otherwise noted.

HANDLES

HANDLE WITH NPT		PART # POLY	PART # METAL
 Poly / Metal	1/2"	511P0N05	791P0N05L
	3/4"	511P0N07	791P0N07L
	1"	511P0N10	791P0N10L

For available cord grips, see pg 231.

POLY HANDLE WITH CORD GRIP	CABLE RANGE	PART #
	.350-.520"	711P0BP6
	.520-.680"	711P0CP5
	.680-.980"	711P0DP4

METAL HANDLE WITH CORD GRIP		
	.438-.500"	791P0BS3L
	.500-.562"	791P0BS4L
	.562-.625"	791P0CS1L
	.625-.750"	791P0CS4L
	.750-.875"	791P0DS1L
	.875-1.000"	791P0DS3L

POLY 90° HANDLE WITH NPT		
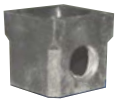	1/2"	751P9N05
	3/4"	751P9N07
	1"	751P9N10

POLY HANDLE		
	.350-.700"	511P0D18

POLY ANGLED HANDLE		
	.354-.708"	511P6D18

ANGLES

POLY ANGLE			
	MB Box 30°	511M3	
	70°	511M7	Panel mounting only.

METAL ANGLE			
	0°	591M0	
	FS/FD Box 30°	791M3FS	Base measures approximately 4.2" x 2.7". Due to the variation in sizes of FS boxes, please verify that your FS box matches our dimensions, if not call Customer Service for other solutions.
	45°	591M4	

BOXES

POLY CONDUIT ENTRY WITH NPT			
 * 7.0 in³	30°	1/2"	511B3N05
	30°	3/4"	511B3N07

POLY WALL BOX WITH NPT			
 * 3.4 in³	0°	1/2"	511B0N05
	0°	3/4"	511B0N07

METAL WALL BOX WITH NPT			
 * 3.8 in³	0°	1/2"	591B0N05
	0°	3/4"	591B0N07

POLY WALL BOX WITH ANGLE			
 * 82.0 in³	70°		511C7000
			70° poly boxes are not drilled.
		Ground Bar	51AA089

METAL BOX WITH NPT			
	0°	1/2"	7T1F0N05
	0°	3/4"	7T1F0N07
	0°	1"	7T1F0N10
	0°	1 1/4"	7T1F0N12

POLY ANGLE WITH METAL BOX WITH NPT			
 * 30.0 in³	30°	1/2"	711C3N05
	30°	3/4"	711C3N07
	30°	1"	711C3N10
	30°	1 1/4"	711C3N12

METAL ANGLE WITH METAL BOX WITH NPT			
 * 27.0 in³	45°	1/2"	791C4N05
	45°	3/4"	791C4N07
	45°	1"	791C4N10
	45°	1 1/4"	791C4N12

NPT on top or bottom (if rotated). For other configurations, contact Customer Service.

MISCELLANEOUS ACCESSORIES

PROTECTIVE INLET/PLUG CAP		
	01-NA426	For Inlets/Plugs Only.

FLUSH MOUNT	
	01-2A142

PN Spare Parts

Male Configuration

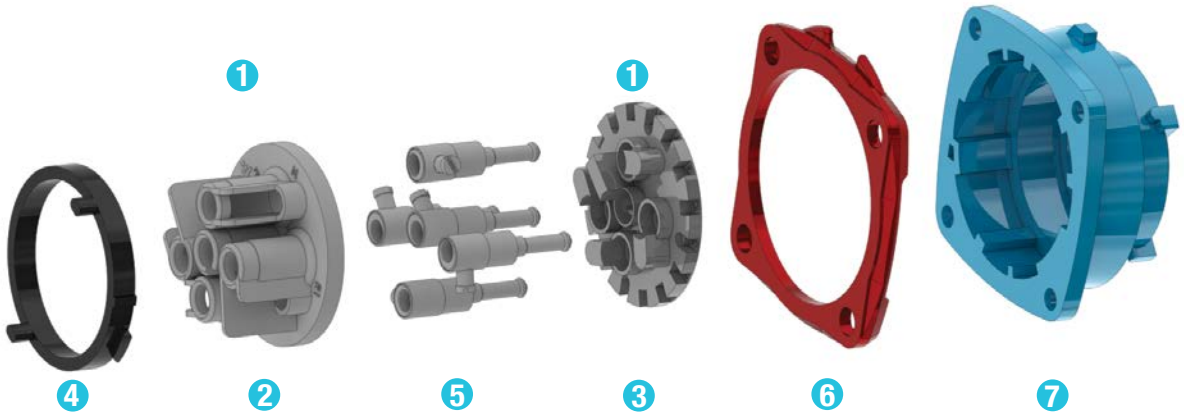

			PN20 POLY	PN20 METAL	PNHT HT METAL
1	Plug Insulator (Top & Bottom)		01-NA010	09-NA010	09-2A010-185
2	Insulator Bottom		01-NA010-B	09-NA010-B	09-2A010-185-B
3	Insulator Top		01-NA010-T	09-NA010-T	09-2A010-185-T
4	Locking Ring		01-NA583	09-NA583	09-2A583-185
5	Plug Contact		01-NA011	09-NA011	09-2A011-185
5	Plug Ground Contact		01-NA019	09-NA019	09-2A019-185
6	Color-Coded Voltage Gasket		01-NAJ26	09-NAJ26	-
			01-NAC26	09-NAC26	-
			01-NAB26	09-NAB26	-
			01-NAR26	09-NAR26	-
			01-NAN26	09-NAN26	
7	Plug Casing		01-NA014	09-NA014	09-2A014-185

Please provide full part number for accurate part alignment

Part numbers in catalog are for current revisions, others may be available upon request.

For replacement parts contact Customer Service at 800-433-7642.

Female Configuration

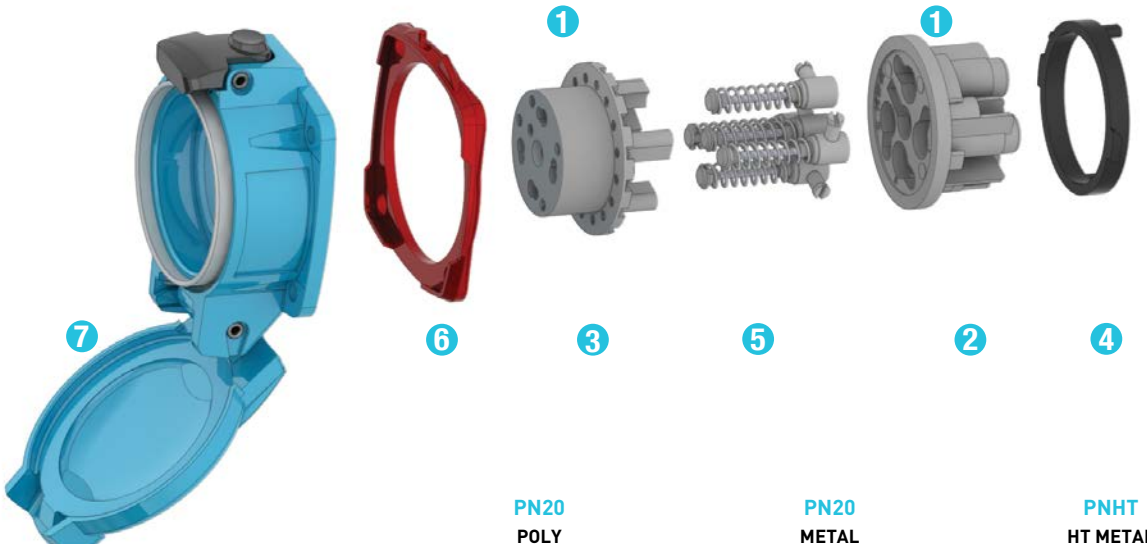

			PN20 POLY	PN20 METAL	PNHT HT METAL
1	Receptacle Insulator (Top & Bottom)		01-NA020	09-NA020	09-2A020-185
2	Insulator Bottom		01-NA020-B	09-NA020-B	09-2A020-185-B
3	Insulator Top		01-NA020-T	09-NA020-T	09-2A020-185-T
4	Locking Ring		01-NA583	09-NA583	09-2A583-185
5	Receptacle Contact		01-NA021	09-NA021	09-2A021-185
5	Receptacle Ground Contact		01-NA029	09-NA029	09-2A029-185
6	Color-Coded Voltage Gasket		01-NAJ26	09-NAJ26	-
			01-NAC26	09-NAC26	-
			01-NAB26	09-NAB26	-
			01-NAR26	09-NAR26	-
			01-NAN26	09-NAN26	
7	Receptacle Casing (as shown)		01-NA024	09-NA024	09-2A024-185

Please provide full part number for accurate part alignment

Part numbers in catalog are for current revisions, others may be available upon request.

For replacement parts contact Customer Service at 800-433-7642.

PN DIMENSIONS – Provided in Inches

SCAN ME >>

Dimensions are for reference only and may change depending on accessories used. For precise dimensions contact MELTRIC Engineering.

Plug

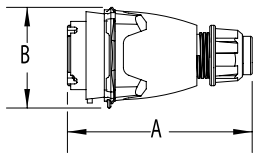

Inlet

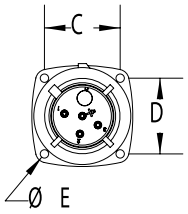

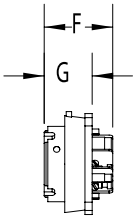

Plug Angled Handle

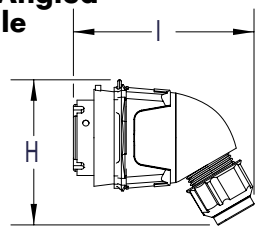

PRODUCT	A	B	C	D	E	F	G	H	I
PN	4.33	2.4	1.65	1.65	0.18	1.5	1.14	3.9	3.17

Connector

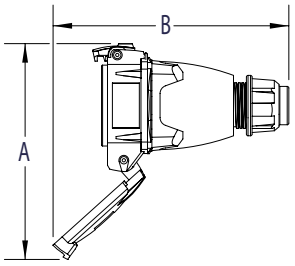

Receptacle

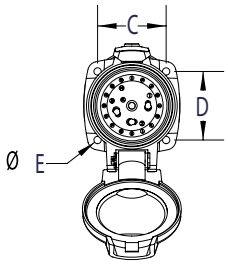

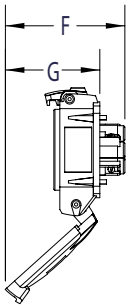

Connector Angled Handle

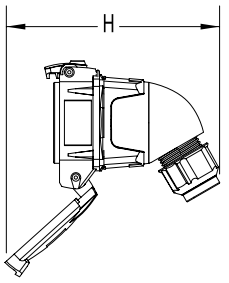

PRODUCT	A	B	C	D	E	F	G	H
PN	5.51	5.69	1.65	1.65	0.18	1.93	1.38	4.17

Box/30° Angle/ Receptacle/Plug

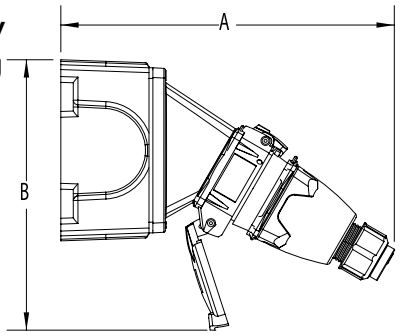

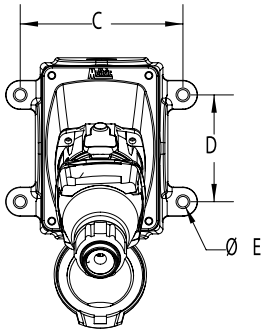

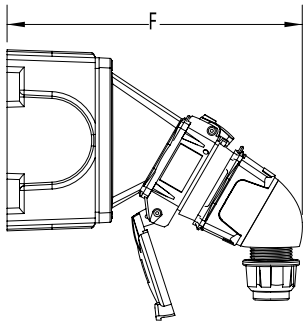

PRODUCT	A	B	C	D	E	F
PN	8.59	6.96	4.19	2.75	0.27	7.6

30° Angle/Receptacle/Plug

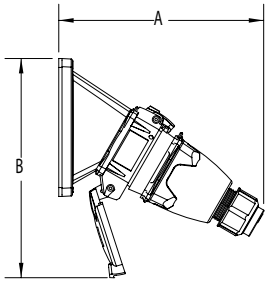

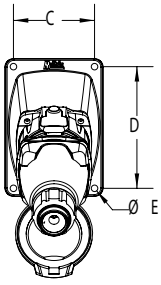

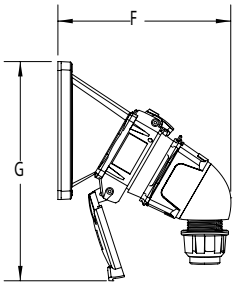

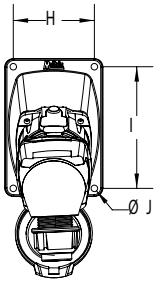

PRODUCT	A	B	C	D	øE	F	G	H	I	J
PN	6.32	6.76	2.5	3.75	0.2	5.33	6.76	2.5	3.75	0.2

70° Wall Box/Receptacle

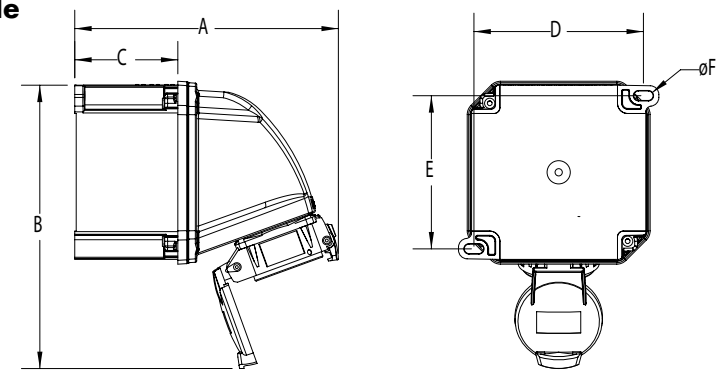

PRODUCT	A	B	C	D	E	F
PN	7.13	7.63	2.80	4.60	4.15	0.26

Straight Wall Box/Receptacle/Plug

Straight Wall Box/Receptacle/ Plug/Angled Handle

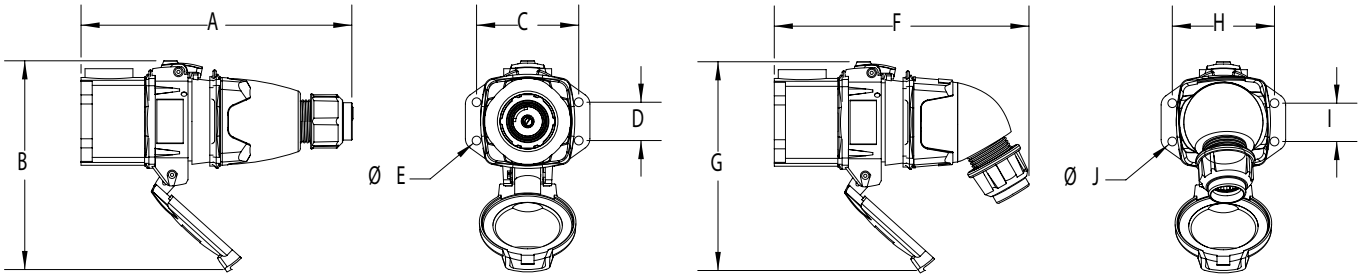

PRODUCT	A	B	C	D	øE	F	G	H	I	J
PN	6.68	5.15	2.52	0.95	0.22	6.28	5.15	2.52	0.95	0.22

Connector/Plug

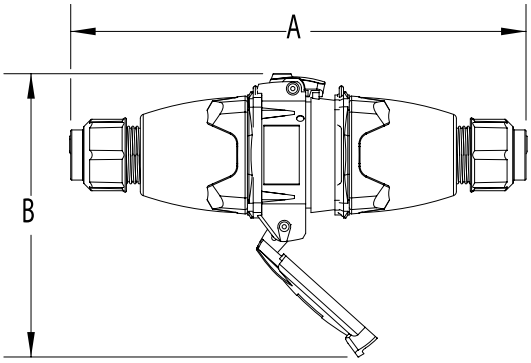

PRODUCT	A	B
PN	8.37	5.21

PNHT
High Temperature





Main Advantages

- Suitable for application temperatures up to 465°F (240°C)
- Compact yet durable device
- Spring-loaded, silver-nickel contacts
- Spring-assisted elliptical deforming ring resists loosening of the wire terminations

- Features and Ratings p. 114
- PNHT p. 115

SCAN ME »

PRODUCT FEATURES



General Ratings

Amperage	30 A
Voltage	480 VAC Max
Environmental	IP44
Temperature	Max 465°F (240° C)

NOM listing available

This high-temperature version of the PN is approved for use in temperatures up to 465°F / 240°C.

Therefore, you can supply power to electrical equipment located next to heat sources: machines, industrial facilities, steel works, metallurgy, etc.

Operating Instructions

Disconnection



Ensure that the circuit is de-energized before removing the plug from the receptacle.



To remove the plug, apply slight inward force and rotate the plug counterclockwise.

Connection



To connect, open lid, align grooves in inlet with pins in the receptacle casing.



Insert and twist clockwise until plug is engaged.

PNHT High Temperature

Ratings

- **Max Amperage & Voltage**
  30 A, 480 VAC, 130 VDC
- **Not for Current Interruption**
  Not for current interrupting
- **Environmental Ratings**
  IP44
- **Temperature Range**
  Min -40°F / Max 465°F
  See pg 260 for temperatures outside of this range.
- **Wiring Capacity**
  Based on THHN wire sizes.
  Min 14 AWG Max 8 AWG

Certification
NOM

Receptacle (female)



Inlet (male)



! Remember to add installation accessories to your order

North American Configurations

VOLTAGE	POLARITY	PART # METAL	PART # METAL
125 V	1P+N+G	09-24075-185	09-28075-185
250 V	2P+G	09-24072-185	09-28072-185
125 250 V	2P+N+G	09-24076-185	09-28076-185
250 V	3P+G	09-24073-185	09-28073-185
125 250 V	3P+N+G	09-24077-185	09-28077-185
277 V	1P+N+G	09-24045-185	09-28045-185
480 V	2P+G	09-24042-185	09-28042-185
480 V	3P+G	09-24043-185	09-28043-185
277 480 V	3P+N+G	09-24047-185	09-28047-185

For international configurations and ratings (IEC, CE) visit meltric.com/international-catalog or contact Customer Service at 800-433-7642.

! See pages 237-246 for detailed information on these options

Handle Option Guide pgs 243-244

INSTALLATION ACCESSORIES – SIZE 1

When properly installed, all accessories meet or exceed the environmental ratings of the devices they are mounted to; unless otherwise noted.

HANDLES

HANDLE WITH CORD GRIP CABLE RANGE	PART #
.310-.510"	571P020M185
.470-.790"	571P025M185
.630-.940"	571P032M185

For available cord grips, see pg 231.

METAL HANDLE W/THREADED OPENING WITH NPT	
1/2"	571P0N05185
3/4"	571P0N07185
1"	571P0N10185

BOXES

METAL WALL BOX WITH NPT			PART #
	0°	1/2"	571B0N05185
	0°	3/4"	571B0N07185

METAL BOX WITH NPT		
0°	1/2"	771F0N05
0°	3/4"	771F0N07
0°	1"	771F0N10
0°	1 1/4"	771F0N12

METAL ANGLE WITH METAL BOX WITH NPT		
45°	1/2"	771C4N05185
45°	3/4"	771C4N07185
45°	1"	771C4N10185
45°	1 1/4"	771C4N12185

NPT on top or bottom (if rotated). For other configurations, contact Customer Service.

ANGLES

METAL ANGLE		
	0°	571M0
	45°	571M4185



DSDC
Direct Current





Main Advantages

- Rated for Direct Current
- Standard locking feature enables locking in the connected and disconnected position.
- Robust Metal or Poly constructions

- Features and Ratings p. 118
- DSDC p. 119

SCAN ME >>

PRODUCT FEATURES

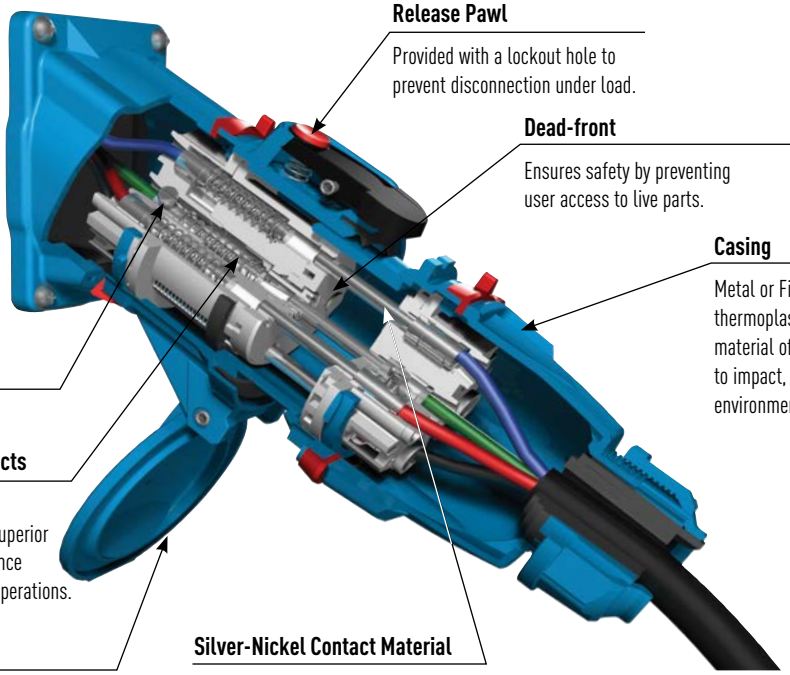

Release Pawl
Provided with a lockout hole to prevent disconnection under load.

Dead-front
Ensures safety by preventing user access to live parts.

Casing
Metal or Fiberglass reinforced thermoplastic polyester material offers great resistance to impact, corrosion and harsh environmental conditions.

Spring-Assisted Screw Terminals

Spring-Loaded Butt-Style Contacts
Ensures optimal contact force and superior electrical performance over thousands of operations.

Lid
Provides additional protection from harsh environments.

Silver-Nickel Contact Material
Solid silver-nickel contact surfaces provide superior conductivity, durability and corrosion resistance.

Lockout/Tagout Provisions
Allows plug to be easily locked out and tagged out. Optional Padlock Pawl allows lockout/tagout of the receptacle.

General Ratings

Amperage	130 VDC: 20 to 200 A 250 VDC: 20 to 200 A 600 VDC: 15 to 100 A 750 VDC: 10 to 30 A
Voltage	130 VDC, 250 VDC, 600 VDC or 750 VDC
Environmental	Type 3R or Type 4X/IP69/IP69K
Temperature	Min -40°F/Max 140°F

Highlighted Feature

Receptacle Lockout Hole



All DSDC models are provided with a 5/16" lockout hole in the pawl. This feature allows locking of the receptacle to prevent accidental disconnection of the plug under load.

Listings

Category	UL	CSA	NOM
Plugs and Receptacles	UL 1682	C22.2 No. 182.1	NOM-003-SCFI-2014

Operating Instructions



When a DSDC is under load the receptacle should be locked to prevent disconnection.



If the DSDC is NOT under load, it can be disconnected by pressing the pawl.



A 30˚ counter-clockwise turn of the plug allows it to be totally withdrawn from the receptacle. This is done in complete safety as the circuit is already de-energized.



The plug and the receptacle are separated. The safety shutter prevents access to live parts.

5 To reconnect, insert plug into receptacle, rotate 30° clockwise, and apply insertion force.

DSDC Direct Current

UL/CSA Ratings

- **Max Amperage & Voltage**
  200 A, 750 VDC
- **Current Interruption Capability**
  Not for current interrupting
- **Environmental Ratings**
  DSDC1 and DSDC3:
  Type 3R/IP54/IP55 (Standard)
  DSDC6, DSDC9 and DSDC2:
  Type 4X/IP69/IP69K (Standard)*
  *Also meets IP66/IP67 requirements
- **Temperature Range**
  Min -40°F/Max 140°F
  See pg 260 for temperatures outside of this range.
- **Wiring Capacity**
  Based on THHN wire sizes.
  DSDC1 Min 14 AWG Max 8 AWG
  DSDC3 Min 12 AWG Max 4 AWG
  DSDC6 Min 10 AWG Max 2 AWG
  DSDC9 Min 4 AWG Max 2/0 AWG
  DSDC2 Min 4 AWG Max 4/0 AWG
- Certifications
  UL 1682 (130, 250 & 600 VDC)
  CSA C22.2 NO. 182.1 listed up to 250 VDC
  NOM
  750 VDC devices pass UL testing, but are outside the scope of the standard so they cannot be listed.

Receptacle Options	Part #
Type 4X Watertightness (for DSDC1 and DSDC 3)	Recept # -4X
Metal Pawl (on poly receptacle)	Recept # -824
Self-Returning Lid	Recept # -NC

DSDC2 models are also provided with a screw locking pawl to provide an alternative means of preventing accidental disconnection under load.

Inlet Options	Part #
Type 4X Watertightness	Inlet # -4X
With no Lockout Hole	Inlet # -A155

See pages 237-246 for detailed information on these options

Receptacle (female)



Inlet (male)



Remember to add installation accessories to your order

North American UL/CSA Configurations

NOTE: Poly devices should not be inter-mated with metal devices

VOLTAGE		POLARITY	PART #		PART #	
			POLY	METAL	POLY	METAL
DSDC1	130 V/20 A	2P+G	33-14109	-	33-18109	-
DSDC3	130 V/30 A	2P+G	33-34109	-	33-38109	-
DSDC6	130 V/60 A	2P+G	33-64109	37-64109	33-68109	37-68109
DSDC9	130 V/100 A	2P+G	33-94109	37-94109	33-98109	37-98109
DSDC2	130 V/200 A	2P+G	-	37-24109	-	37-28109
DSDC1	250 V/20 A	2P+G	33-14209	-	33-18209	-
DSDC3	250 V/30 A	2P+G	33-34209	-	33-38209	-
DSDC6	250 V/60 A	2P+G	33-64209	37-64209	33-68209	37-68209
DSDC9	250 V/100 A	2P+G	33-94209	37-94209	33-98209	37-98209
DSDC2	250 V/200 A	2P+G	-	37-24209	-	37-28209
DSDC1	600 V/15 A	2P+G*	33-14058-S82	-	33-18058-S82	-
DSDC3	600 V/30 A	2P+G*	33-34058-S82	-	33-38058-S82	-
DSDC6	600 V/50 A	2P+G*	33-64058-S82	37-64058-S82	33-68058-S82	37-68058-S82
DSDC9	600 V/60 A	2P+G*	33-94058-S82	-	33-98058-S82	-
DSDC2	600 V/100 A	2P+G*	-	37-24058-S82	-	37-28058-S82
DSDC1	750 V/10 A	2P+G*	33-14158-S69	-	33-18158-S69	-
DSDC3	750 V/20 A	2P+G*	33-34158-S69	-	33-38158-S69	-
DSDC6	750 V/30 A	2P+G*	33-64158-S69	37-64158-S69	33-68158-S69	37-68158-S69

Notes: *Polarity for connection purposes. Devices have additional contacts used for load splitting. See information below.

For international configurations and ratings (IEC, CE) visit meltric.com/international-catalog or contact Customer Service at 800-433-7642.

Jumpers provided on 600 VDC and 750 VDC models

Jumpers are required on all 600 VDC and 750 VDC models as a safety precaution to split the arc in case of accidental disconnection under load. Plugs and receptacles are provided with jumpers installed. Receptacles utilize a jumper between N and L3 poles. Plugs utilize a jumper between L2 and N poles.

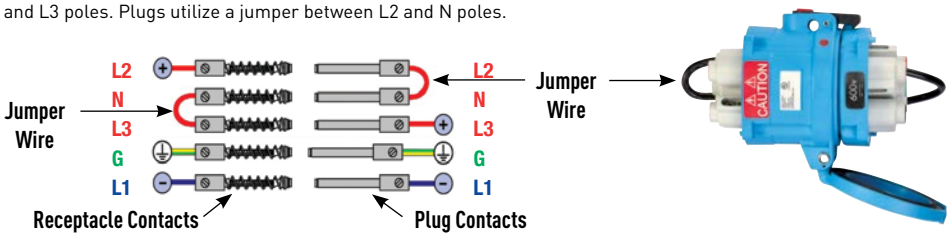

Handle Option Guide pgs 243-244

INSTALLATION ACCESSORIES

When properly installed, all accessories meet or exceed the environmental ratings of the devices they are mounted to; unless otherwise noted.



Poly Handle



DSDC1 shown with drawplates



DSDC1, 3, 6 shown

Poly Handle



DSDC9 shown

Poly Handle

HANDLES

	CABLE RANGE	POLY HANDLE	1/2"	3/4"	1"	1 1/4"	1 1/2"	2"	2 1/2"
DSDC1	.200-.820"	512P0D21	512P0N05 with drawplates	512P0N07 with drawplates	512P0N10 with drawplates	512P0N12 with drawplates	-	-	-
			512P0N05E2615	512P0N07E2615	512P0N10E2615	512P0N12E2615	-	-	-
DSDC3	.390-1.180"	513P0D30	513P0N05	513P0N07	513P0N10	513P0N12	-	-	-
DSDC6	.511-1.377"	514P0D35	514P0N05	514P0N07	514P0N10	514P0N12	514P0N15	-	-
DSDC9	-	-	-	515P0N07	515P0N10	515P0N12	515P0N15	515P0N20	-
DSDC2	-	-	-	-	-	-	516P0N15	516P0N20	516P0N25

For metal accessories, see the cross-reference chart below.

Notes:

- Finger draw plates are recommended for easier connector closure on cord to cord assemblies.
- For available cord grips, see pg 231.



DSDC1, 3, 6 shown

Metal Box



DSDC9, 2 shown

Metal Box

BOXES

	1/2"	3/4"	1"	1 1/4"	1 1/2"	2"	2 1/2"
DSDC1	7T1F0N05	7T1F0N07	7T1F0N10	7T1F0N12	-	-	-
DSDC3	7T1F0N05	7T1F0N07	7T1F0N10	7T1F0N12	-	-	-
DSDC6	-	-	7T4F0N10	7T4F0N12	7T4F0N15	7T4F0N20	-
DSDC9	-	-	-	7T5F0N12	7T5F0N15	7T5F0N20	7T5F0N25
DSDC2	-	-	-	-	7T6F0N15	7T6F0N20	7T6F0N25

NPT on top or bottom (if rotated).
For other configurations, contact Customer Service.



Poly Conduit Box For poly devices only

	1/2"	3/4"	1"	1 1/4"
DSDC1	512B3N05	512B3N07	-	-
DSDC3	513B3N05	513B3N07	513B3N10	-
DSDC6	514B3N05	514B3N07	514B3N10	514B3N12

For DSDC dimensions and additional accessories use the cross-reference chart below.

	DIMENSIONS	ACCESSORIES
DSDC1	pg 55-56	pg 44
DSDC3	pg 55-56	pg 46
DSDC6	pg 55-56	pg 48
DSDC9	pg 55-56	pg 50
DSDC2	pg 55-56	pg 52













* Set of Two (2)



For Inlets/Plugs Only



For Inlets/Plugs Only



For Inlets/Plugs Only

ANGLES

	POLY 30° ANGLE	METAL 30° ANGLE	METAL ANGLE FS/FD BOX 30°	METAL STRAIGHT ADAPTER	POLY 70°** WALL BOX
DSDC1	512M3	592M3	792M3FS*	592M0	512C7000
DSDC3	513M3	593M3	793M3FS*	593M0	513C7000
DSDC6	514M3	594M3	-	594M0	514C7000
DSDC9	515M3	595M3	-	595M0	-
DSDC2	–	596M6 (60°)	-	596M0	-

* M3FS base measures approximately 4.2" x 2.7". Due to the variation in sizes of FS boxes, please verify that your FS box matches our dimensions, if not call Customer Service for other solutions.
** 70° boxes do not have pre-drilled entry locations. Contact Customer Service if factory drilling is required.

MISC. ACCESSORIES

FINGER DRAWPLATES	PROTECTIVE INLET/PLUG CAP	POLY PADLOCKABLE INLET/PLUG CAP	SPRING-LOADED PADLOCKABLE INLET/PLUG CAP
61-3A346	31-1A426	DS1PC	31-1A226
61-6A346	31-3A426	DS3PC	31-3A226
31-6A346	31-6A426	DS6PC	31-6A226+
**	31-9A426	DS9MC***	-
**	39-2A426	DS2MC***	-

* Recommended for all assembly applications, for facilitated mating.
** An easy closing mechanism is standard on DSDC9 and DSDC2.
*** Padlockable Cap Aluminum – Not pictured.
\+ For metal devices, replace "31" prefix with "39". Order with -A155 suffix.

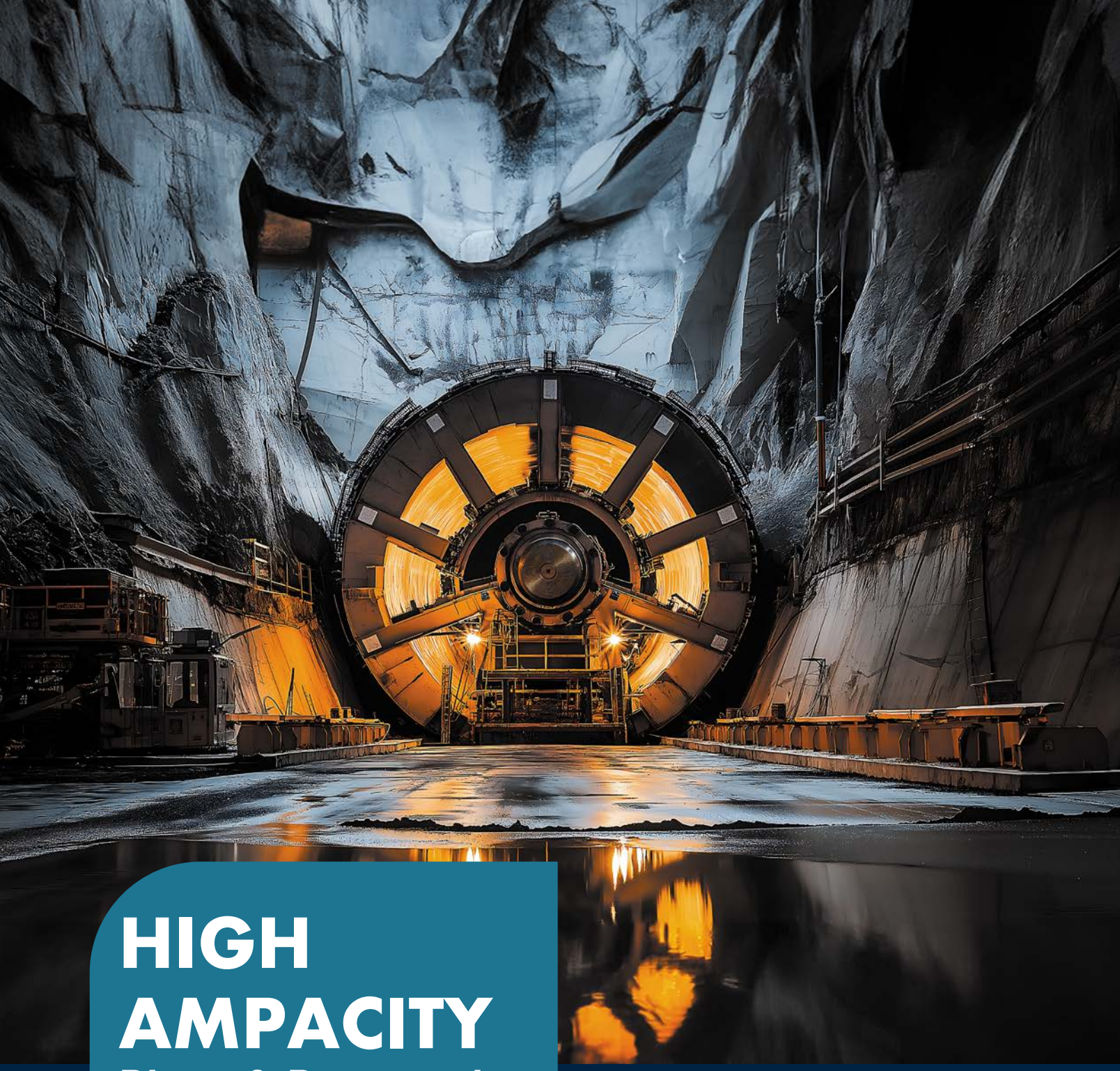

HIGH AMPACITY
Plugs & Receptacles

High amperage plugs and receptacles from MELTRIC offer superior safety and performance in harsh environments. Each high amperage product line features MELTRIC's exclusive contact technology along with advanced safety features and relatively easy plug insertion and removal.



PF/PFQ MULTI PHASE, TWIST TO CONNECT P. 123

- 300 A to 600 A, 600 V
- Silver pressure contacts
- Mechanical locking system



DR400 THREE PHASE, EASY PLUG INSERTION P. 131

- 400 A, 600 V
- Silver-nickel, spring-loaded, butt-style contacts
- Easy closing mechanism



P66 HIGH PERFORMANCE P. 135

- Up to 660 A, 1,100 V
- Copper-free Casing, IP66/IP67
- Available in 90° and 180° configurations



CS1000 SINGLE POLE, EASY TO OPERATE P. 141

- 400 A, 600 V
- Silver-nickel, spring-loaded, butt-style contacts
- Locking pin prevents accidental disconnects



SP SINGLE POLE, EXCLUSIVE SAFETY FEATURES P. 145

- 600 A, 600 V
- Silver, butt-style contacts
- Integral pilot circuit



DSP400 SINGLE POLE, ADDITIONAL PILOTS P. 149

- 400 A, 480 V
- Silver-nickel, butt-style contacts
- Pass through pilot contacts



PF/PFQ
High Amperage





Main Advantages

- Durable in harsh environments
- Safety features provide maximum protection
- Easy plug insertion and removal

- Features and Ratings p. 124
- PF/PFQ 300-600 A p. 125
- PF/PFQ Lugs p. 127
- Spare Parts p. 129
- Dimensions p. 130

SCAN ME >>

WATCH ME >>

PRODUCT FEATURES

Auxiliary Pilot Contacts
Provided for use with control circuits. They close after and open before the phase contacts.

Mechanical Locking System
Ensures safety and watertightness. Mechanical lock secures the inlet to the receptacle and engages the auxiliary/pilot contacts.

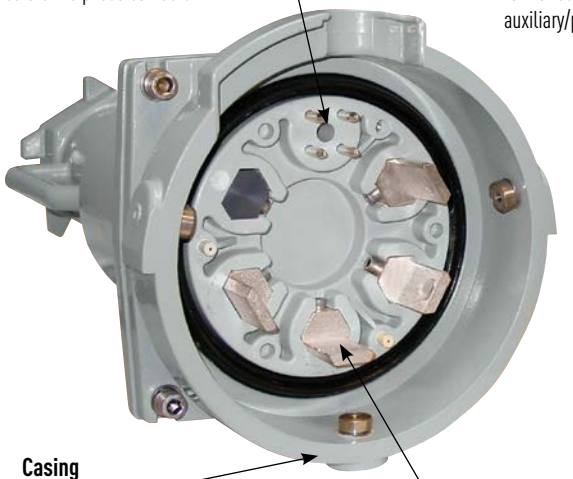



Casing
Epoxy/powder coated aluminum material offers great resistance to harsh environments.

Silver Pressure Contacts
Silver material and self-cleaning action provides maximum conductivity and performance in dirty and corrosive conditions.

Safety Shutter
Protects recessed female contacts and inhibits user access to live parts.

General Ratings

Amperage	300 to 600 A
Voltage	600 VAC, 250 VDC Max
Frequency	50-60 Hz (not UL at 50 Hz)
Environmental	IP66/IP67
Temperature	Min -40°F/Max 140°F

Listings

	UL	CSA	NOM
Plugs and Receptacles	UL 1682	C22.2 No. 182.1	NOM-003-SCFI-2014

Listings only apply to 300 A and 400 A devices at 600V or less.

Highlighted Feature

Pilot Contacts

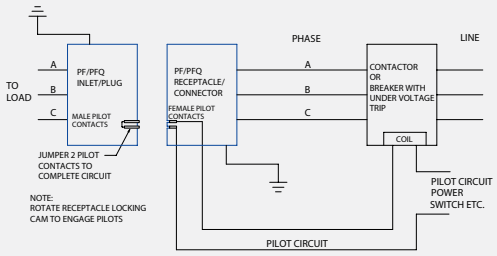

Line diagram of typical PF pilot control circuit

For multiple devices in a parallel circuit, contact factory for example control circuit diagrams.

Category	PF	PFQ
Contacts	4	8
Pilot Amperage	10 A standard duty	5 A @ 240 VAC
Interlock Type	Mechanical	Mechanical
Terminal Type	Screw	Pre-wired

Listings only apply to 300 A and 400 A devices at 600V or less.

Notes:
- The mechanical locking of the plug to the receptacle via the rotation of a cam, closes the pilot contacts.
- Failure to use a pilot/relay system can create an electrical shock/arc flash hazard.

Operating Instructions



PF devices are preferred for the ease of operation relative to pin and sleeve devices.

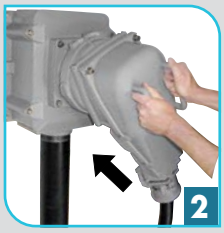

Insert the plug into the receptacle – this is done with little resistance relative to competitive devices.



Twist plug approximately 30° clockwise to engage the phase contacts and to make the unit watertight.



Turning the mechanical lock secures the inlet to the receptacle and closes the pilot circuit which energizes the shunt coil.

5 To disconnect, turn mechanical lock to disengage pilot contacts and de-energize the shunt coil. Twist plug 30° counterclockwise to disengage the phase contacts, withdraw plug.

PF/PFQ High Ampacity - 300-600 A

UL/CSA Ratings

- **Max Amperage & Voltage**
  PFQ300 = 300 A, 600 VAC, 250 VDC
  PF300 = 300 A, 600 VAC, 250 VDC
  PF400 = 400 A, 600 VAC, 250 VDC
  PF600 = 600 A, 600 VAC, 250 VDC
- **Current Interruption Capability**
  Not for current interrupting
- **Environmental Ratings**
  IP66/IP67
- **Temperature Range**
  Min -40°F/Max 140°F
  See pg 260 for temperatures outside of this range.
- **Wiring Capacity**
  PFQ = 2 AWG to 600 MCM
  PF = 2 AWG to 600 MCM
- **Certifications**
  UL 1682, CSA C22.2 NO. 182.1, NOM
  Listings do not apply to PF600.

! PF/PFQ devices are not intended for connection or disconnection under load. To prevent live making or breaking electrical interlocking is required.

! Remember to add installation accessories to your order

Receptacle/Cap (female)



PFQ shown

Inlet/Cap (male)



PFQ shown

North American Configurations

VOLTAGE	POLARITY	PART #		PART #	
		PFQ 300**	PF300	PFQ 300**	PF300
277 V	1P+N+G	47-34045	49-34045	47-38045	49-38045
347 V	1P+N+G	47-34145	49-34145	47-38145	49-38145
480 V	2P+G	47-34042	49-34042	47-38042	49-38042
277 480 V	2P+N+G	47-34046	49-34046	47-38046	49-38046
480 V	3P+G	47-34043	49-34043	47-38043	49-38043
277 480 V	3P+N+G	47-34047	49-34047	47-38047	49-38047
600 V	2P+G	47-34142	49-34142	47-38142	49-38142
347 600 V	2P+N+G	47-34146	49-34146	47-38146	49-38146
600 V	3P+G	47-34143	49-34143	47-38143	49-38143
347 600 V	3P+N+G	47-34147	49-34147	47-38147	49-38147

** PFQ300 devices are differentiated from similarly rated PF300 devices in their smaller size, lighter weight and different pilot contacts.

Main Options	Part #
Receptacle with no cap	Recept # - 48
Receptacle with lockout hole	Recept # - 843
Inlet with no cap	Inlet # - 48
Inlet with lockout hole	Inlet # - 843

Notes:

- Metal caps are provided as standard with inlets and receptacles.
- Heat shrink wrap is provided with each inlet and receptacle to provide insulation between terminals.
- **Lugs are not included**. The PF and PFQ contacts utilize bolt-on lug type wire terminals, which require a compression lug with a 9/16" or 5/8" hole. The angled handle requires straight lugs; the straight handle requires 90° lugs. See pgs 127-128

! See pages 237-246 for detailed information on these options

Receptacle/Cap (female)



PF shown

Inlet/Cap (male)



PF shown

North American Configurations

VOLTAGE	POLARITY	PART #		PART #	
		PF400	PF600	PF400	PF600
277 V	1P+N+G	49-44045	49-64045	49-48045	49-68045
347 V	1P+N+G	49-44145	49-64145	49-48145	49-68145
480 V	2P+G	49-44042	49-64042	49-48042	49-68042
277 480 V	2P+N+G	49-44046	49-64046	49-48046	49-68046
480 V	3P+G	49-44043	49-64043	49-48043	49-68043
277 480 V	3P+N+G	49-44047	49-64047	49-48047	49-68047
600 V	2P+G	49-44142	49-64142	49-48142	49-68142
347 600 V	2P+N+G	49-44146	49-64146	49-48146	49-68146
600 V	3P+G	49-44143	49-64143	49-48143	49-68143
347 600 V	3P+N+G	49-44147	49-64147	49-48147	49-68147

Handle Option Guide pgs 243-244

INSTALLATION ACCESSORIES – SIZE C & F

When properly installed, all accessories meet or exceed the environmental ratings of the devices they are mounted to; unless otherwise noted.

HANDLES

METAL STRAIGHT HANDLE	ANGLE	PART #
PFQ300	0°	47-3A013-XXX
PF300	0°	49-3A013-XXX
PF400	0°	49-4A013-XXX
PF600	0°	49-6A013-XXX


PF shown

METAL ANGLE HANDLE	ANGLE	PART #
PFQ300	90°	47-3A913-XXX



THREADED CLAMP WITH CABLE RANGE	SUFFIX #
2.000-2.125"	-200
2.125-2.250"	-225
2.250-2.375"	-237
2.375-2.500"	-250
2.500-2.750"	-275
2.750-3.000"	-300
3.000-3.125"	-312
3.125-3.350"	-335
3.350-3.577"	-350



NPT ADAPTER	NPT	SUFFIX #
	2"	-N20
	2 1/2"	-N25
	3"	-N30


Threaded Adapter

For available cord grips, see pg 231.

90° ANGLED METAL HANDLE WITH BOLT-ON CLAMP	ANGLE	PART #
PF300/400/600	90°	49-6A913-XX


PF Only

BOLT-ON CLAMP WITH CABLE RANGE	SUFFIX #
1.575"-1.968"	-50
1.968"-2.362"	-60
2.362"-2.756"	-70
2.756"-3.150"	-80
3.150"-3.543"	-90



NPT ADAPTER	NPT	SUFFIX #
	2"	-N20
	2 1/2"	-N25
	3"	-N30


Bolt-on Adapter

For available cord grips, see pg 231.

Accessory Spotlight - Adapter

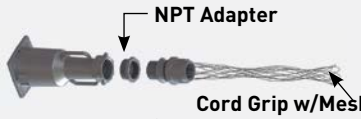

The adapter accessory allows the user to connect a third-party cord grip to the PF/PFQ handle.

BOXES

METAL BOX	PART #
PFQ300	MB40PFQ-XX
PF300	MB40-XX
PF400	MB40-XX
PF600	MB40-XX



This is a heavy-duty powder coated aluminum back box with removable cover. Conduit entry hub up to 4" can be ordered on one or both ends or even on the back of the enclosure. Multiple hubs and sizes can be ordered for installs with parallel entry's on one end of the box.

HUB SIZES	NPT	XX (SUFFIX #)
	2"	-20
	2 1/2"	-25
	3"	-30
	3 1/2"	-35
	4"	-40

MISC. ACCESSORIES

INLET METAL CAP	
PFQ300	47-3A126
PF300	49-3A126
PF400	49-4A126
PF600	49-6A126



RECEPTACLE METAL CAP	
PFQ300	47-3A925
PF300	49-3A925
PF400	49-4A925
PF600	49-6A925



WEIGHTS

PART	PF	PFQ
Inlet	15 lbs	9 lbs
Receptacle	25 lbs	12 lbs
Angled Handle	15 lbs	12 lbs
Straight Handle	10 lbs	10 lbs
Junction Box	45 lbs	45 lbs
Cap	12 lbs	3 lbs

PF/PFQ High Ampacity

Straight Barrel Lugs



MELTRIC recommends using lugs with tangs that do not exceed 1 3/4".

Lugs are not included with PF/PFQ devices - order separately

PART #	WIRE SIZE CLASS B, C	WIRE SIZE (FLEX) CLASS G, H, I, K, M, DLO
PFLUG1	1 AWG	2 AWG
PFLUG10	1/0 AWG	1 AWG
PFLUG20	2/0 AWG	1/0 AWG
PFLUG30	3/0 AWG	2/0 AWG
PFLUG40	4/0 AWG	3/0 AWG
PFLUG250	250 kcmil	4/0 AWG
PFLUG300	300 kcmil	250 kcmil (G, H)
PFLUG350	350 kcmil	250/262 kcmil (I, K, M, DLO)
PFLUG400	400 kcmil	300/313 kcmil
PFLUG500	500 kcmil	350/373 kcmil
PFLUG600	600 kcmil	400/444 kcmil
PFLUG650	650 kcmil	500/535 kcmil

Application Note

Installation Accessory: Angled Handle



Straight Barrel Lugs are used on PF/PFQ devices with angled handles.





Apply heat shrink over lugs at terminals (supplied but not shown).



Receptacle shown

90° Bent/Angle Lugs

MELTRIC recommends using lugs with tangs that do not exceed 1 3/4".

Lugs are not included with PF/PFQ devices - order separately



PART #	WIRE SIZE CLASS B, C	WIRE SIZE (FLEX) CLASS G, H, I, K, M, DLO
PFLUG1-90	1 AWG	2 AWG
PFLUG10-90	1/0 AWG	1 AWG
PFLUG20-90	2/0 AWG	1/0 AWG
PFLUG30-90	3/0 AWG	2/0 AWG
PFLUG40-90	4/0 AWG	3/0 AWG
PFLUG250-90	250 kcmil	4/0 AWG
PFLUG300-90	300 kcmil	250 kcmil (G, H)
PFLUG350-90	350 kcmil	250/262 kcmil (I, K, M, DLO)
PFLUG400-90	400 kcmil	300/313 kcmil
PFLUG500-90	500 kcmil	350/373 kcmil
PFLUG600-90	600 kcmil	400/444 kcmil
PFLUG700-90	700 kcmil	500/535 kcmil

Application Note

Installation Accessory: Straight Handle



90° Bent Lugs are used on PF/PFQ devices with straight handles.



Apply heat shrink over lugs at terminals (supplied but not shown).



Inlet shown



PF/PFQ Spare Parts

Male Configuration

PFQ pictured

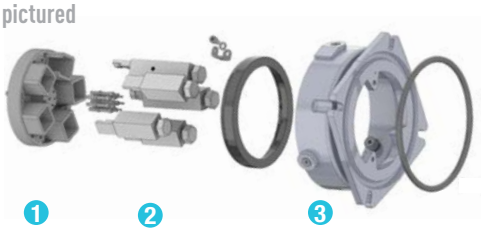

PF pictured



		PFQ300 METAL	PF300 METAL	PF400 METAL	PF600 METAL
1	Plug Insulator with Pilots	47-3A010	49-3A010	49-4A010	49-6A010
2	Phase Contact	47-3A011	49-3A011	49-4A011	49-6A011
2	Neutral Contact	47-3A011N	49-3A011N	49-4A011N	49-6A011N
2	Plug Ground Contact	47-3A019	49-3A019	49-4A019	49-6A019
3	Plug Metal Casing (as shown)	47-3A014	49-3A014	49-4A014	49-6A014

Female Configuration

PFQ pictured

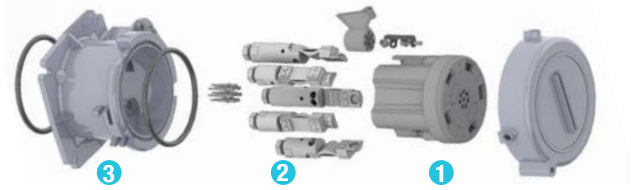

PF pictured

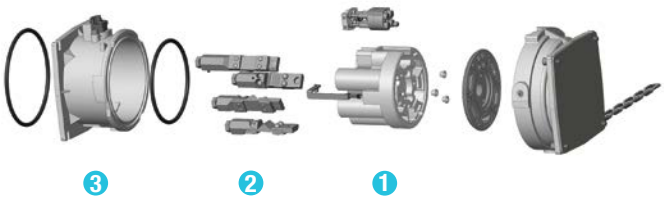

		PFQ300 METAL	PF300 METAL	PF400 METAL	PF600 METAL
1	Receptacle Insulator with Pilots	47-3A020	49-3A020	49-4A020	49-6A020
2	Phase Contact	47-3A021	49-3A021	49-4A021	49-6A021
2	Neutral Contact	47-3A021N	49-3A021N	49-4A021N	49-6A021N
2	Ground Contact	47-3A029	49-3A029	49-4A029	49-6A029
3	Receptacle Metal Casing (as shown)	47-3A024	49-3A024	49-4A024	49-6A024
4	Cap	47-3A925	49-3A925	49-4A925	49-6A925

Please provide full part number for accurate part alignment

Part numbers in catalog are for current revisions, others may be available upon request.

For replacement parts contact Customer Service at 800-433-7642.

DIMENSIONS – Provided in Inches

SCAN ME >>

Dimensions are for reference only and may change depending on accessories used. For precise dimensions contact MELTRIC Engineering.

Angled Plug

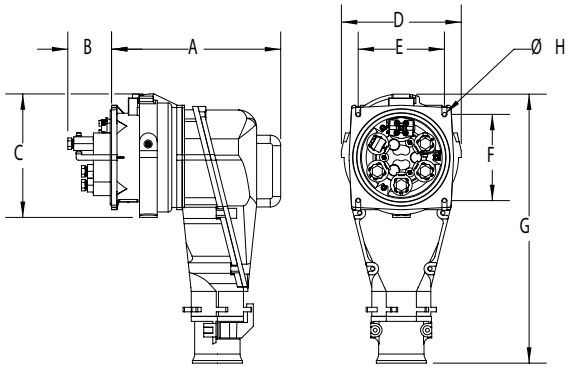

PRODUCT	A	B	C	D	E	F	G	H
PFQ	13.94	2.72	9.61	7.95	5.71	5.71	18.54	0.43
PF	14.67	3.79	10.71	10.39	7.48	7.48	23.33	0.43

Straight Plug

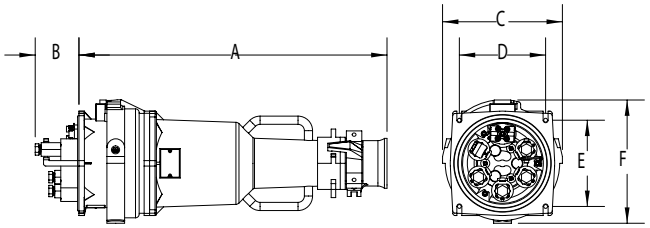

PRODUCT	A	B	C	D	E	F
PFQ	25.40	2.72	7.95	5.71	5.71	9.61
PF	26.72	3.79	10.39	7.48	7.48	10.69

Connector/Plug

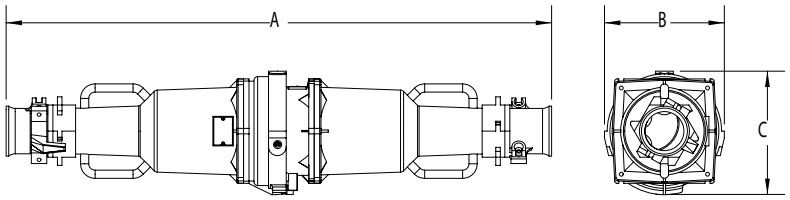

PRODUCT	A	B	C
PFQ	46.50	9.61	7.95
PF	47.31	10.39	10.69

DR400
High Amperage



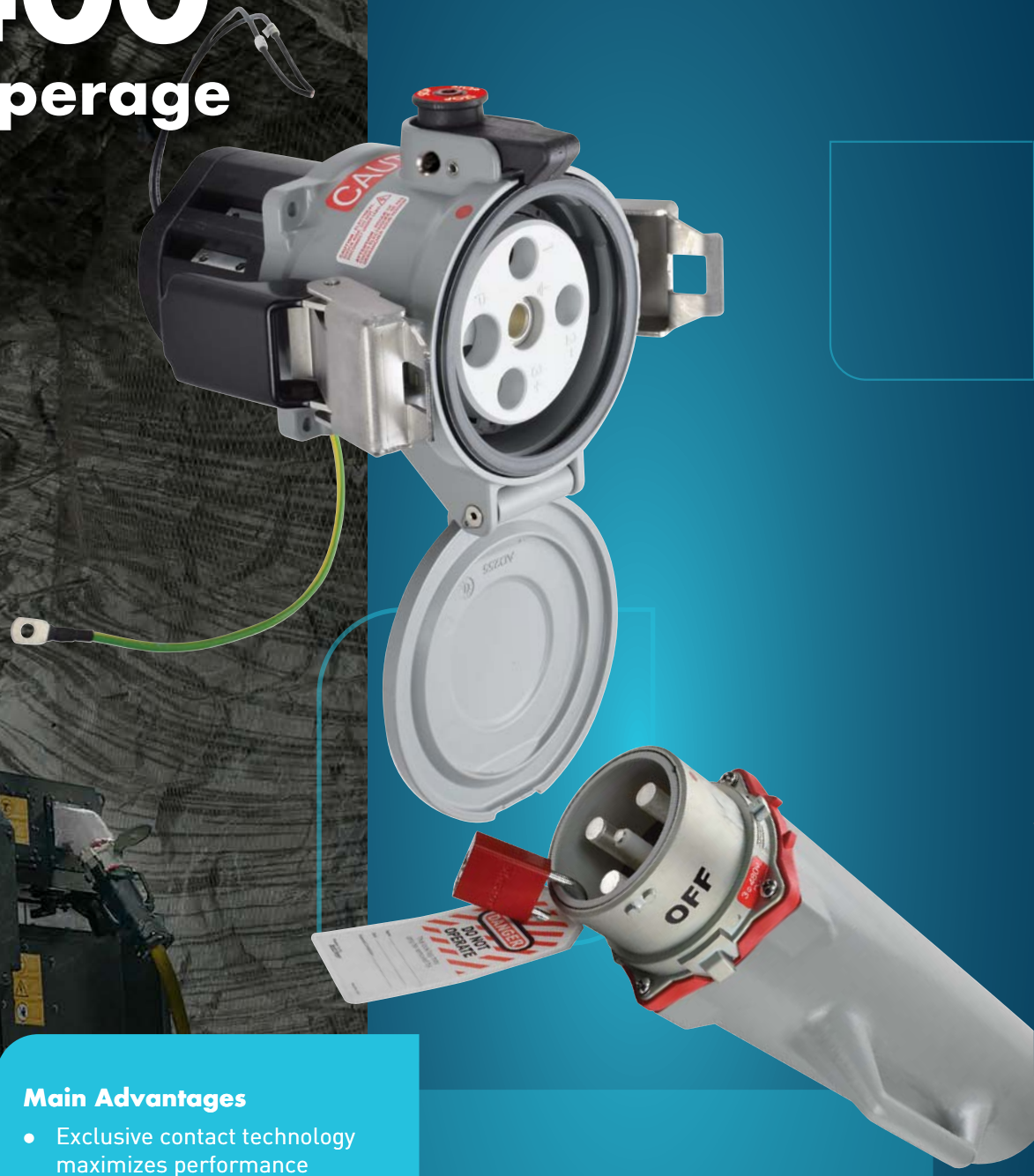

Main Advantages

- Exclusive contact technology maximizes performance and durability
- Safety features protect workers
- Easy plug insertion and removal

- Features and Ratings p. 132
- DR400 p. 133
- Dimensions p. 134

SCAN ME »

PRODUCT FEATURES

Locking Pawl (padlockable)

Prevents accidental disconnection and makes Lockout/Tagout easy.

5/16" hole

Silver-Nickel Contact Material

Solid silver-nickel contact surfaces provide superior conductivity, durability and corrosion resistance.

2 Pilot Contacts (not visible)

Provides a secondary circuit to monitor parameters or control equipment.



Easy Closing Mechanism

Users can mate the plug to the receptacle with relative ease.

Safety Shutter

Helps prevent user access to live parts.

Spring Assisted Screw Terminals

Patented design ensures "Tighten and Forget" confidence.

Plug Lockout Provision (not visible)

Lockout hole on inlet allows plug to be locked out and tagged out.

General Ratings

Amperage	400 A
Voltage	600 VAC
Frequency	50-60 Hz
Environmental	Type 4X, IP69/IP69K
Temperature	Min -40°F/Max 140°F

Highlighted Feature

Silver-Nickel, Spring-Loaded Butt-Style Contacts



Solid Silver-Nickel, Spring-Loaded Butt Style Contacts maintain optimal contact pressure and superior conductivity even in dirty, corrosive environments.

Listings

Category	UL	CSA	NOM
Plugs and Receptacles	UL 1682	C22.2 No. 182.1	NOM-003-SCFI-2014

Operating Instructions



Partially insert the plug.



Place the closing mechanism around tabs on inlet.



Push the handles up, the plug is fully drawn into the receptacle.



Use the locking tool and turn clockwise to tighten screw.

DR400 Standard Duty - 400 A

UL/CSA Ratings

- **Max Amperage & Voltage**
  400 A, 600 VAC
- **Current Interruption Capability**
  Not for current interrupting
- **Short Circuit Rating**
  18 kA
  A withstand test was performed with RK1 current limiting fuses sized at at least 100% of the device's ampacity rating.
- **Environmental Ratings**
  Type 4X/IP66/IP67/IP69/IP69K
- **Temperature Range**
  Min -40°F/Max 140°F
  See pg 260 for temperatures outside of this range.
- **Wiring Capacity**
  Min 2 AWG Max 350 MCM*
  Aux Contacts: Prewired 14 AWG
  * Wire size to 500 MCM can be accommodated through use of Cable Reducing Adapters. See Accessory Spotlight.
- **Certifications**
  UL 1682, CSA C22.2 NO. 182.1, NOM

Receptacle (female)



Inlet (male)



! Remember to add installation accessories to your order

North American UL/CSA Configurations

VOLTAGE	POLARITY	PART # METAL	PART # METAL
208 V	3P+G+2PIL	**39-44163-172**	**39-48163-172**
250 V	3P+G+2PIL	**39-44073-172**	**39-48073-172**
480 V	3P+G+2PIL	**39-44043-172**	**39-48043-172**
600 V	3P+G+2PIL	**39-44143-172**	**39-48143-172**

Other voltage configurations are available - contact Customer Service at 800-433-7642

For international configurations and ratings (IEC, CE) visit meltric.com/international-catalog or contact Customer Service at 800-433-7642.

Key Feature

Standard Locking Pawl



DR400 receptacles are provided with a screw-type locking pawl that prevents accidental disconnections under load.

RECEPTACLE OPTIONS	SUFFIX #	INLET OPTIONS	SUFFIX #
Self-Returning Lid (Manual Close)	**Recept # -NC**	Without Lockout Hole	**Inlet # -A155**
Electro-Mechanical Locking System	**Recept # -MIL**		

Order Example: DR400 with Cable Reducing Adapters

To accommodate 500 MCM cable, cable reducing adapters and an extended angle with spacer accessory is required.

Typical order: 480 V 3P+G+2PIL



Receptacle: 39-44043-**172** +  **Angle:** 5T7M6 +  **Cable Reducers:** PT500R350-3 (3 are required)



Inlet: 39-48043-**172** +  **Handle:** 5T7P0N25 +  **Cable Reducers:** PT500R350-3 (3 are required)

! See pages 237-246 for detailed information on these options

Handle Option Guide pgs 243-244

INSTALLATION ACCESSORIES – SIZE 7

When properly installed, all accessories meet or exceed the environmental ratings of the devices they are mounted to; unless otherwise noted.

HANDLES

LARGE HANDLE WITH NPT	PART #
2"	5T7P0N20
2 1/2"	5T7P0N25
3"	5T7P0N30

LARGE METAL HANDLE WITH CORD GRIP, MESH AND CABLE RANGE	PART #	
2.062-2.188"	5T7P0JT1	
2.188-2.312"	5T7P0JT2	*May require stripping of cable jacket.
2.312-2.438"	5T7P0JT3*	
2.437-2.625"	5T7P0KT1	
2.625-2.812"	5T7P0KT2	

STRAIGHT HANDLE	CABLE RANGE	PART #	NPT	PART #
Bolt-on Clamp	1.57-1.97"	5K6P0D50	1 1/2"	5K6P0N15L
	2.01-2.36"	5K6P0D60	2"	5K6P0N20L
NPT	2.40-2.76"	5K6P0D70	2 1/2"	5K6P0N25L
	2.79-3.15"	5K6P0D80	3"	5K6P0N30L

ANGLES

METAL ANGLE		
0°	5T7M0	
60° Extended	5T7M6	68 mm spacer recommended when reducing pins are to be used.

BOXES

METAL BOX WITH NPT		PART #	
0°	2"	7T7F0N20	Requires Angle Adapter.
0°	2 1/2"	7T7F0N25	
0°	3"	7T7F0N30	
0°	3 1/2"	7T7F0N35	
0°	4"	7T7F0N40	

MISCELLANEOUS ACCESSORIES

PROTECTIVE INLET/PLUG CAP		
	39-2A426	For Inlet/Plugs Only.

CABLE REDUCING ADAPTERS (ORDER 1 FOR EACH TERMINAL)	
PT535FX350-3	Reducer for 500 MCM Fine Stranded or Flexible Wire.
PT500R350-3	Reducer for 500 MCM Coarse Stranded or Building Wire.
PT400R350-3	Reducer for 400 MCM Wire.

INLET COMPATIBILITY KIT	
39-4A396	

SPACER	
5K7M0-68	68 mm (2.68") spacer is recommended when using the angle 5T7M6 when reducing adapters are required.

PADLOCKABLE INLET/PLUG CAP	
DS2MC	Aluminum – For Inlets/Plugs Only. -A155 suffix required on inlet part # to retain water ingress protection.

RECEPTACLE LOCKING PIN	
LP-843	Requires Padlockable Pawl option (-843) on receptacle.

DIMENSIONS – Provided in Inches

Dimensions are for reference only and may change depending on accessories used. For precise dimensions contact MELTRIC Engineering.

SCAN ME >>

Inlet

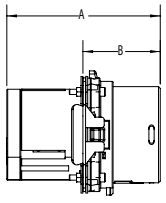

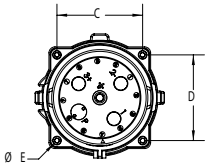

Receptacle

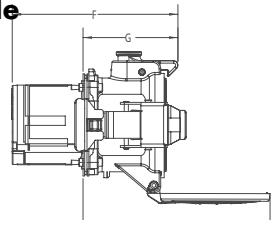

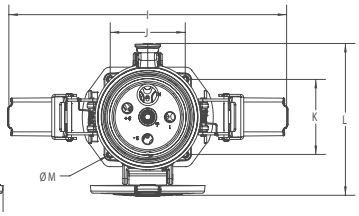

PRODUCT	A	B	C	D	øE	F	G	H	I	J	K	L	øM
DR400	6.61	3.48	3.86	3.86	0.26	8.51	5.03	9.62	14.29	3.86	3.86	7.85	0.26

Plug

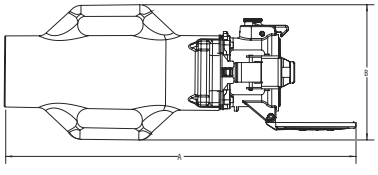

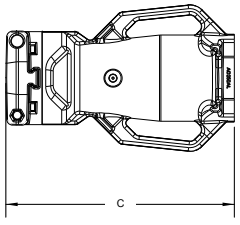

Angle/Receptacle

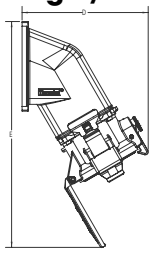

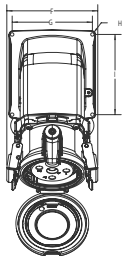

PRODUCT	A	B	C	D	E	F	G	H	I
DR400	24.62	9.50	13.3	10.22	18.29	7.36	6.5	0.28	6.5

P66
High Amperage



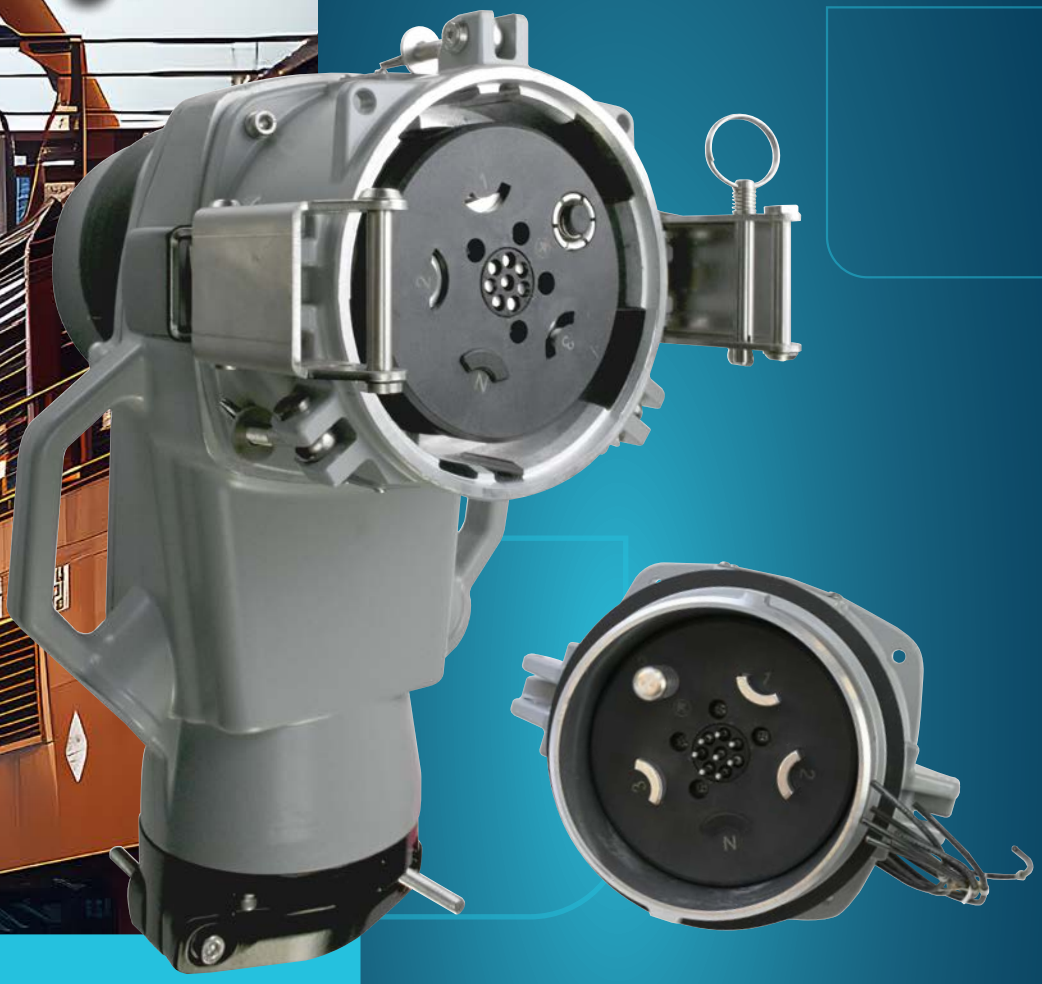

Main Advantages

- Up to 660 A, 1,100 VAC in a more compact footprint
- Rated IP66/IP67
- 8 auxiliary contacts
- Corrosion-resistant, Copper-free, aluminum casing
- Split voltage/neutral contact available

SCAN ME »

- Features and Ratings p. 136
- P66 p. 137
- Dimensions p. 139

PRODUCT FEATURES

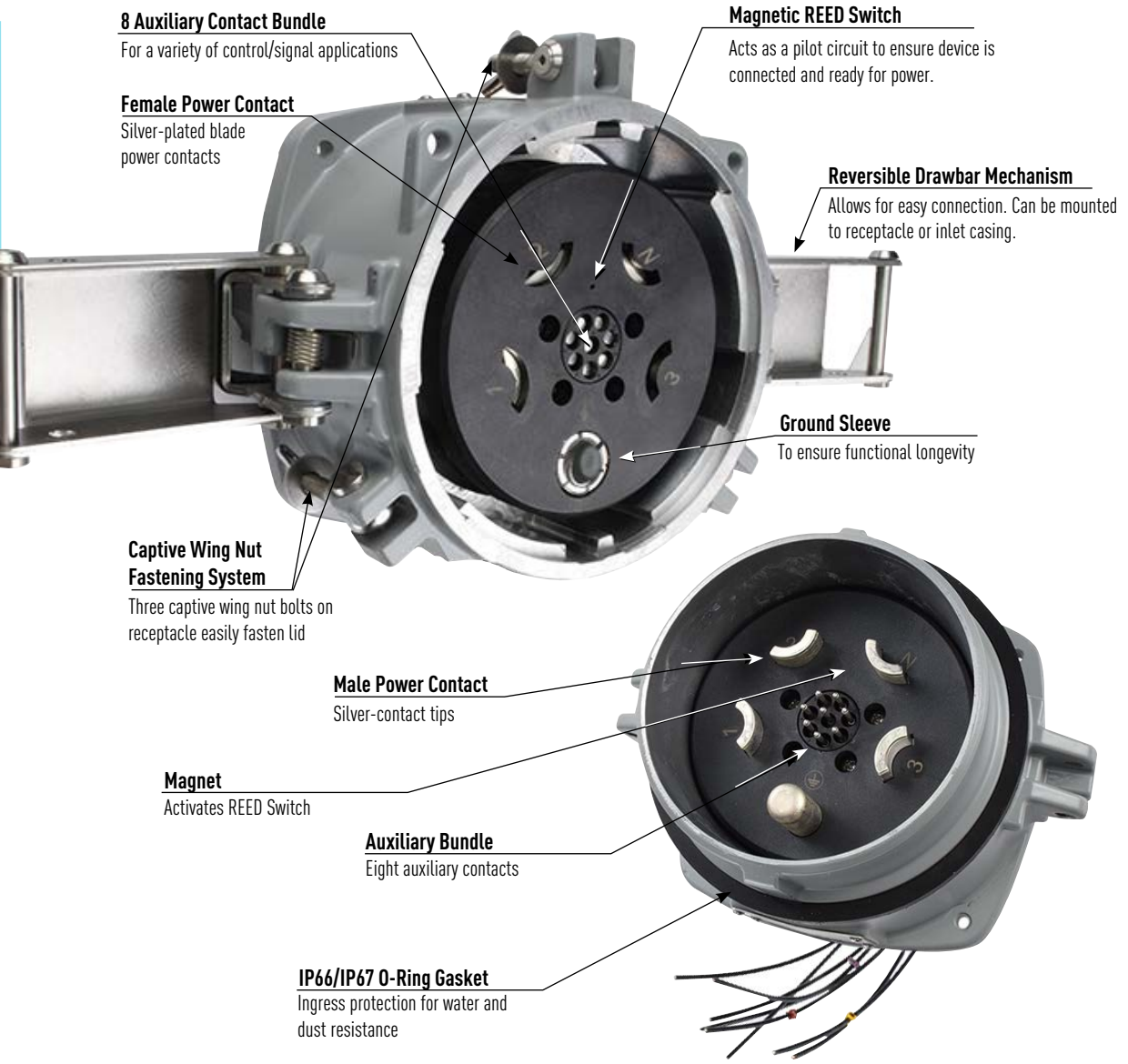

General Ratings

Amperage	660 A*
Voltage	1,100 VAC, 1,500 VDC Max
Frequency	≤ 500 Hz
Environmental	IP66/IP67
Temperature	Min -40°F/Max 140°F Reference temperature range on page 137

* Based on IEC standards

Highlighted Feature



Magnetic Reed Switch

Built-in pre-wired reed switch enables real-time monitoring of device status for improved operational visibility and integration into control systems.

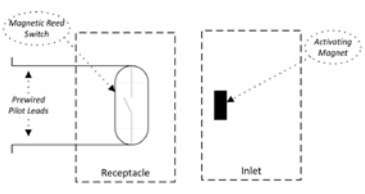

PILOT CIRCUIT

Operating Instructions



While device is de-energized, remove the lid by unfastening the captive wing nuts.



Align the inlet with the receptacle.



Connect the receptacle and inlet by closing the drawbars.



Insert the locking pin through the drawbar hole to secure. Power may now be turned on.

5 To disconnect, turn off power, remove locking pin from drawbars, separate receptacle from inlet, secure the lid, and fasten with wing nuts.

P66 High Amperage - 660 A

Ratings

- **Max Amperage & Voltage**
  660 A, 1,100 VAC/1,500 VDC
- **Current Interruption Capability**
  Not for Current Interrupting
- **Environmental Ratings**
  IP66/IP67
- **Temperature Range**
  Min -40°F/Max 140°F
- **Wiring Capacity**
  Cage Terminal:
  Min 300 MCM Max 777 MCM
  Lug Compatibility:
  Min 3/0 Max 535 MCM
  Aux Contacts: Prewired 14 AWG
  See pg 237 for details
  Prewired Pilot .5 A, 400 VAC

Receptacle (female)

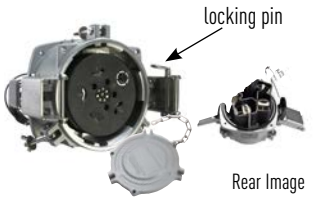

Inlet (male)



FOR DIRECT WIRING

DRAWBARS CAN BE INSTALLED ON EITHER THE RECEPTACLE OR INLET PER SET ORDERED.

VOLTAGE	POLARITY	PART # WITH DRAWBARS	PART # WITHOUT DRAWBARS
480 V	3P+G	4164043726	4168043
480 V	3P+N+G	4164047726	4168047
600 V	3P+G	4164143726	4168143
600 V	3P+N+G	4164147726	4168147
1100 V	3P+G	4164223726	4168223
1100 V	3P+N+G	4164227726	4168227

Receptacle (female)



Inlet (male)



VOLTAGE	POLARITY	PART # WITHOUT DRAWBARS	PART # WITH DRAWBARS
480 V	3P+G	4164043	4168043726
480 V	3P+N+G	4164047	4168047726
600 V	3P+G	4164143	4168143726
600 V	3P+N+G	4164147	4168147726
1100 V	3P+G	4164223	4168223726
1100 V	3P+N+G	4164227	4168227726

HANDLE

STRAIGHT HANDLE WITH INTEGRATED CABLE GLAND	CABLE RANGE	PART #
	2.362"-2.756"	5T8P0D70
	2.756"-3.150"	5T8P0D80
	3.150"-3.543"	5T8P0D90

ACCESSORIES

PADLOCK	PART #	
	416ALOCK	Set of 2

Receptacle (female)

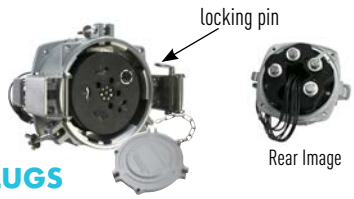

Inlet (male)



FOR COMPRESSION LUGS

DRAWBARS CAN BE INSTALLED ON EITHER THE RECEPTACLE OR INLET PER SET ORDERED.

VOLTAGE	POLARITY	PART # WITH DRAWBARS	PART # WITHOUT DRAWBARS
480 V	3P+G	4164043L26	4168043L
480 V	3P+N+G	4164047L26	4168047L
600 V	3P+G	4164143L26	4168143L
600 V	3P+N+G	4164147L26	4168147L
1100 V	3P+G	4164223L26	4168223L
1100 V	3P+N+G	4164227L26	4168227L

Receptacle (female)



Inlet (male)



VOLTAGE	POLARITY	PART # WITHOUT DRAWBARS	PART # WITH DRAWBARS
480 V	3P+G	4164043L	4168043L26
480 V	3P+N+G	4164047L	4168047L26
600 V	3P+G	4164143L	4168143L26
600 V	3P+N+G	4164147L	4168147L26
1100 V	3P+G	4164223L	4168223L26
1100 V	3P+N+G	4164227L	4168227L26

LUGS



INTERNAL DIAMETER (in)	INTERNAL DIAMETER (mm)	FLEX WIRING AWG	COARSE WIRING AWG	PART #
.51	13.1	2/0, 3/0	3/0, 4/0	416A70C
.57	14.5	4/0	250	416A95C
.64	16.2	262	300	416A12C
.71	18	300, 313	350	416A15C
.81	20.6	350+, 373	400, 500	416A18C
.91	23.1	444+, 500, 535	600	416A24C

+ Only for use with Greenlee EK61DL11 dieless tool

HANDLE



90° HANDLE WITH INTEGRATED CABLE GLAND	CABLE RANGE	PART #
	2.362"-2.756"	5T8P9D70
	2.756"-3.150"	5T8P9D80
	3.150"-3.543"	5T8P9D90

BOXES



SMALL STAINLESS STEEL BOX WITH INTEGRATED CABLE GLAND	CABLE RANGE	PART #
	1.575-1.968"	416A023050
	1.968-2.362"	416A023060
	2.362-2.756"	416A023070
	2.756-3.150"	416A023080
	3.150-3.543"	416A023090



LARGE STAINLESS STEEL BOX WITH INTEGRATED CABLE GLAND	CABLE RANGE	PART #
	1.575-1.968"	416A023550
	1.968-2.362"	416A023560
	2.362-2.756"	416A023570
	2.756-3.150"	416A023580
	3.150-3.543"	416A023590

These enclosures offer additional interior volume for extra wiring space. Both size enclosures have two removable covers and a one piece back pan installed for customer convenience. NPT is available on request.

P66 DIMENSIONS – Provided in Inches

SCAN ME >>

Dimensions are for reference only and may change depending on accessories used. For precise dimensions contact MELTRIC Engineering..

Receptacle and Inlet with Straight Handle

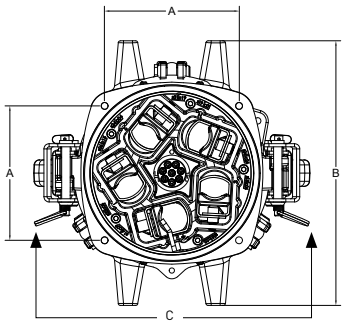

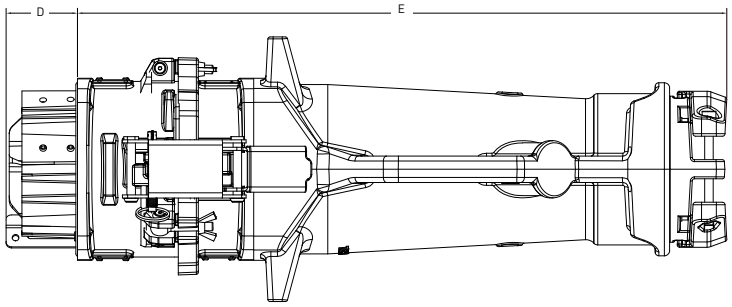

PRODUCT	A	B	C	D	E
ITEM	5.00	9.84	10.28	2.65	24.16

Plug/Connector (Cord-to-Cord)

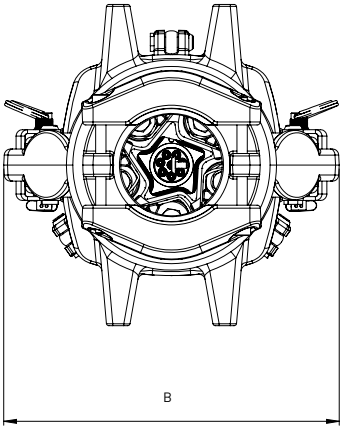

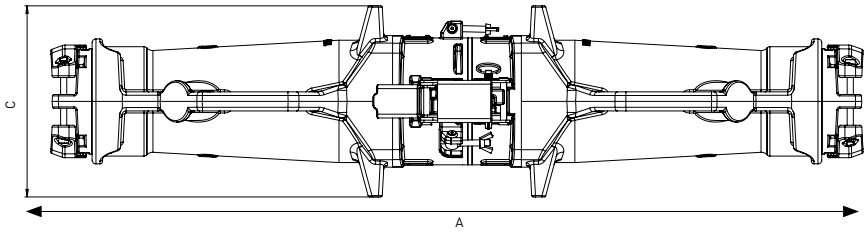

PRODUCT	A	B	C
ITEM	41.83	10.28	9.84

Receptacle on 90° Handle

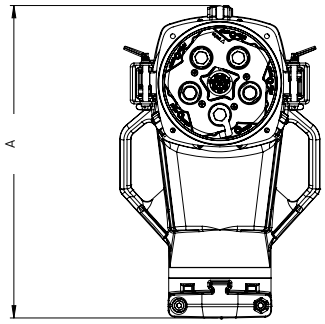

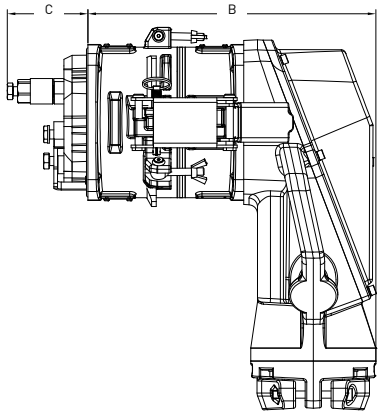

PRODUCT	A	B	C
ITEM	16.60	15.60	3.50

CS1000





Main Advantages

- Built-in locking pin
- Fingerguard protects from live parts
- Color-coded keyed positions
- High Amperage Capacity
- Silver-nickel, butt-style contacts provide superior performance and corrosion resistance

- Features and Ratings p. 142
- CS1000 p. 143
- Dimensions p. 144

SCAN ME >>

WATCH ME >>

PRODUCT FEATURES



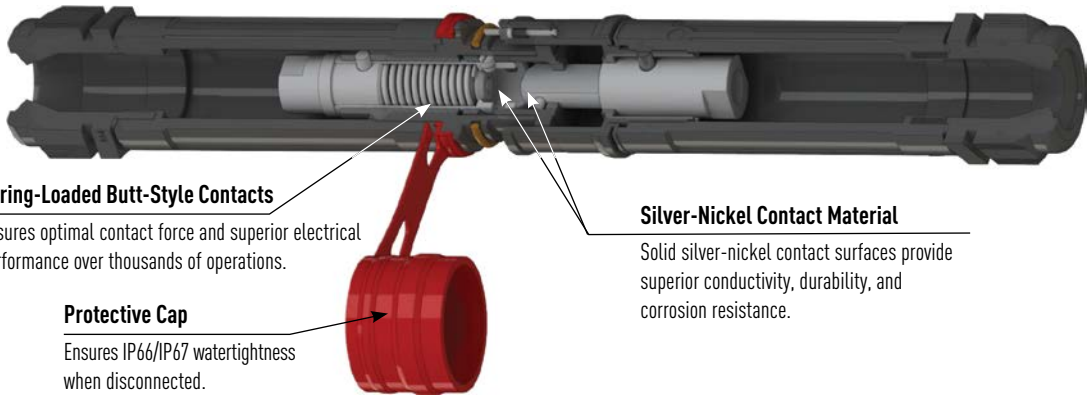

General Ratings

	North American	International
Amperage	400 A	500 A
Voltage	600 VAC, 600 VDC	1000 VAC, 1500 VDC
Frequency	60-400 Hz	50-400 Hz
Environmental	IP66/IP67	IP66/IP67
Temperature	Min -40°F/Max 140°F	Min -40°F/Max 140°F

Listings

Category	UL	CSA	IEC	NOM
Single Pole Plugs and Receptacle	UL 1691	CSA 1691-12	60309-1	NOM-003-SCFI-2014

Highlighted Feature

5 Mechanical Keying Positions (North America color codes shown.)

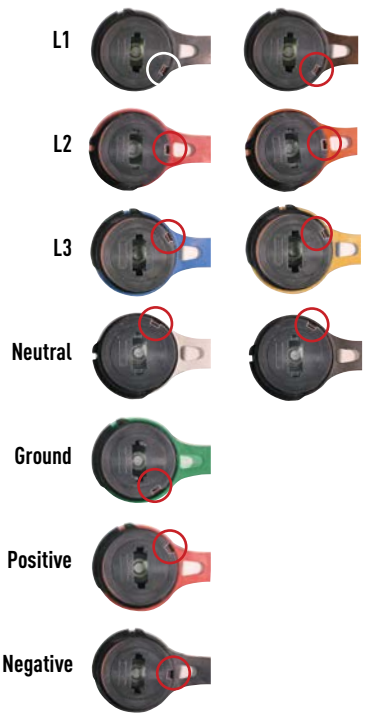

Operating Instructions

Connection







Disconnection





CS1000 Standard Duty - 400 A

UL/CSA Ratings

- **Max Amperage**
  400 A
- **Current Interrupting Capability**
  Not for Current Interrupting
- **Voltage**
  600 VAC, 600 VDC
- **Short Circuit Rating**
  10 kA Withstand
  Testing was performed with RK1 current limiting fuses sized at least 100% of the device's ampacity rating.
- **Environmental Ratings**
  IP66/IP67
- **Temperature Range**
  Min -40°F/Max 140°F
  See pg 260 for temperatures outside of this range.
- **Wiring Capacity**
  Min 1/0 AWG / Max 444 MCM
  90°C rated wire required
- **Applicable Standards**
  UL 1691, CSA 1691-12, NOM

Receptacle
(female) without lug

Inlet
(male) without lug





! Remember to add installation accessories to your order

North American Configurations

VOLTAGE	POLARITY	RECEPTACLE PART # WITHOUT LUG	INLET PART # WITHOUT LUG
≤ 250 V	L1	44-34001-P80	44-38001-P80
≤ 250 V	L2	44-34002-P80	44-38002-P80
≤ 250 V	L3	44-34003-P80	44-38003-P80
≤ 250 V	NEUTRAL	44-3400N-P80	44-3800N-P80
	GROUND	44-3400T-P80	44-3800T-P80
	POSITIVE	44-3400P-P80	44-3800P-P80
	NEGATIVE	44-3400M-P80	44-3800M-P80
> 250 V	L1	44-34001-P88	44-38001-P88
> 250 V	L2	44-34002-P88	44-38002-P88
> 250 V	L3	44-34003-P88	44-38003-P88
> 250 V	NEUTRAL	44-3400N-P88	44-3800N-P88

IEC/CE Ratings

- **Max Amperage**
  500 A
- **Current Interrupting Capability**
  Not for Current Interrupting
- **Voltage**
  1000 VAC, 1500 VDC
- **Environmental Ratings**
  IP66/IP67
- **Temperature Range**
  Min -40°F/Max 140°F
  See pg 260 for temperatures outside of this range.
- **Wiring Capacity**
  Min 1/0 AWG / Max 444 MCM
  185 mm^2 stranded
- **Applicable Standards**
  CE

IEC/CE Configurations

EUROPEAN COLOR CODE	POLARITY	PART # POLY	PART # POLY
Brown	L1	4534001	4538001
Black	L2	4534002	4538002
Grey	L3	4534003	4538003
Blue	NEUTRAL	453400N	453800N
Green	GROUND	453400T	453800T
Red	POSITIVE	453400P	453800P
Black	NEGATIVE	453400M	453800M

INSTALLATION ACCESSORIES – SIZE M

When properly installed, all accessories meet or exceed the environmental ratings of the devices they are mounted to; unless otherwise noted.

ANGLES

POLY ANGLE			
	0°	453A540	Required for mounting on panels, walls, etc.
	30°	453A027	With Adapter Plate.



Use with angle 30° or direct mount

Bolt included

ACCESSORIES

INLET CAP		UNLOCKING TOOL		
	453A126		453A396	One unlocking tool on a "valet" style separable key ring. Available for inlets ordered pre-2025.

PADLOCKING TOOL	
	453A843



Use with handle for cord mounting

CRIMPING LUGS

INTERNAL DIAMETER		STRAIGHT W/TERMINAL	STRAIGHT THREADED	FLEXIBLE WIRING*	COARSE WIRING
in	mm	PART #	PART #	AWG	AWG
.43	11	454A50C	454A50D	1/0[A]	2/0
.51	13.1	454A70C	454A70D	2/0, 3/0	3/0, 4/0
.57	14.5	454A95C	454A95D	4/0	250
.64	16.2	454A12C	454A12D	262	300
.71	18	454A15C	454A15D	300, 313	350
.81	20.6	454A18C	454A18D	350+, 373	400, 500
.91	23.1	454A24C	454A24D	444+, 500, 535	600

Notes: * Class H & I, [A] The ground conductor shall be limited to a maximum size of 1/0 AWG.
UL listing performed with Greenlee EK6IDL11 dieless tool and Dewalt DCE300M2 with Greenlee KC12 dies. + Only for use with Greenlee EK6IDL11 dieless tool.

HANDLES

HANDLE	CABLE OUTSIDE DIAMETER	PART #	
	0.50-1.00"	453A753	Normal Duty 100 lb grip
Not UL/CSA listed	0.70-1.26"	453A783	

HANDLE WITH CORD GRIP (MESH)	CABLE OUTSIDE DIAMETER	PART #	CABLE OUTSIDE DIAMETER	PART #	
	0.50-0.63"	44-3A753-A	0.88-1.00"	44-3A783-A	
	0.56-0.69"	44-3A753-B	1.00-1.13"	44-3A783-B	Heavy-Duty 300 lb grip
	0.63-0.75"	44-3A753-C	1.13-1.25"	44-3A783-C	
	0.69-0.81"	44-3A753-D	1.25-1.38"	44-3A783-D	
	0.75-0.88"	44-3A753-E			

Dimensions Inlet/Receptacle – Provided in Inches

Dimensions are for reference only and may change depending on accessories used. For precise dimensions contact MELTRIC Engineering.

SCAN ME >>

Receptacle

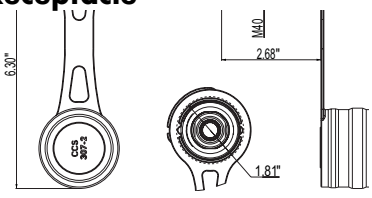

Inline Connector

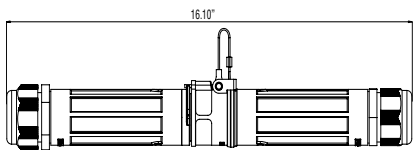

Plug/Receptacle

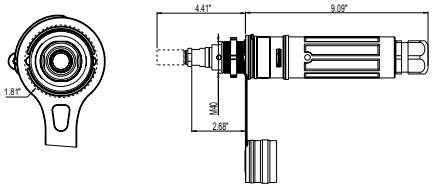

30° Inclined Receptacle/Angle

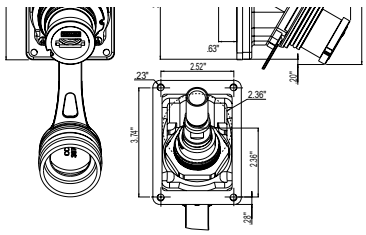

30° Receptacle/Angle with Plug

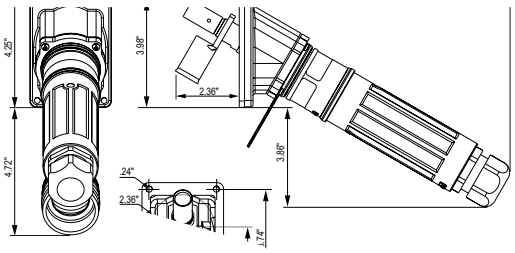

SP
Single Pole High Amperage





Main Advantages

- Mechanical interlock prevents connection/disconnection under load
- Color-coded for quick visual of phases and matching devices
- Silver, butt-style contact technology maximizes IP66/IP67 environmental protection when mated

SCAN ME >>

- Features and Ratings p. 146
- SP p. 147
- Dimensions p. 148

PRODUCT FEATURES

Pilot Connections
Integral pilot circuit for controlling the power circuit.

Latch Release Button
Enables disconnection of the plug from the receptacle.

Drawbar
Assists connection of receptacle and inlet.

Silver Contact Material
Enables maximum performance and durability – withstands at least 2000 operations.

Color Coding
Enables quick visual identification of matching plugs/receptacles.

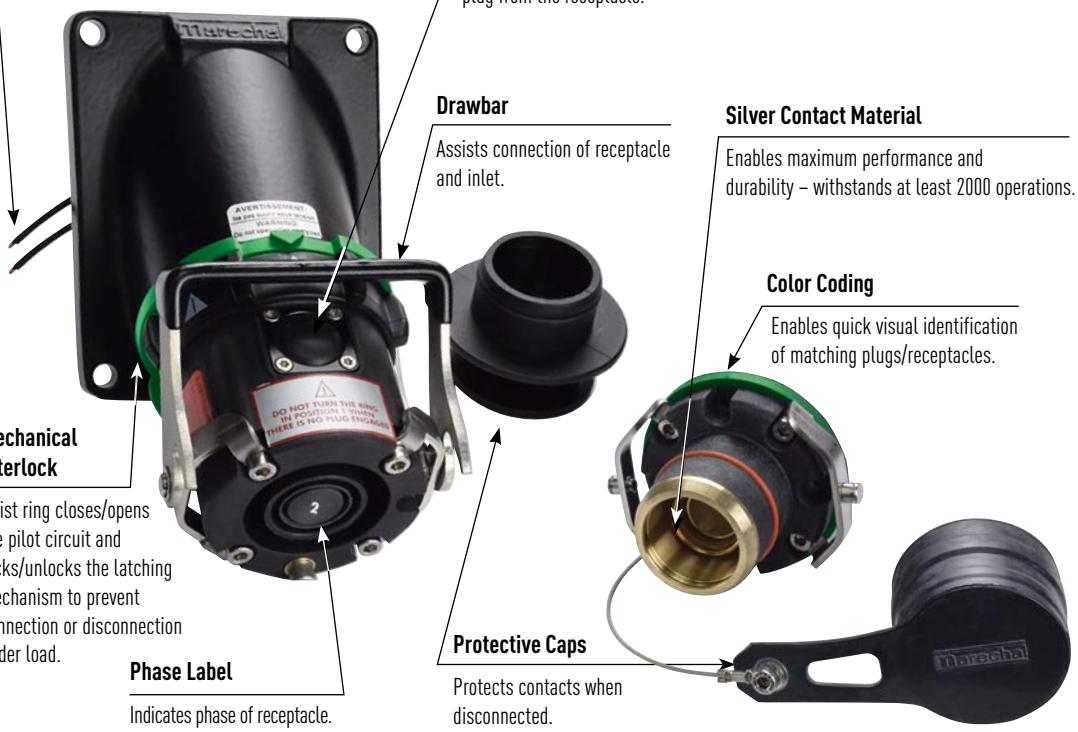

Mechanical Interlock
Twist ring closes/opens the pilot circuit and locks/unlocks the latching mechanism to prevent connection or disconnection under load.

Phase Label
Indicates phase of receptacle.

Protective Caps
Protects contacts when disconnected.

General Ratings

Listing	CSA	IEC	NOM
Amperage	600 A	800 A	600 A
Voltage	600 VAC Max	1000 VAC/1500 VDC Max	600 VAC Max
Frequency	60-400 Hz	50-400 Hz	50-400 Hz
Horsepower	500 hp	-	500 hp
Environmental	IP66/IP67	IP66/IP67	IP66/IP67
Temperature	Min -15°F/Max 140°F	Min -15°F/Max 140°F	Min -15°F/Max 140°F

Highlighted Feature

Pilot Circuit



SP plugs and connectors are designed with safety and durability in mind. Each device is mechanically interlocked with an integral pilot circuit switch for controlling the power circuit in order to prevent connection and disconnection under load.

A typical pilot circuit wiring diagram ≤ 250 VAC circuit shown

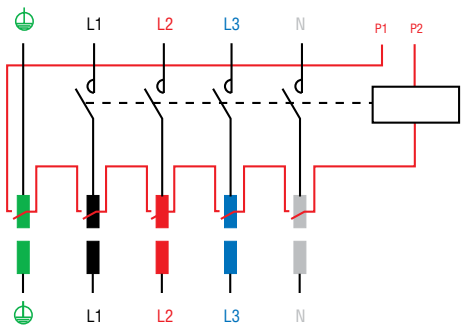

Operating Instructions



To connect, insert the plug into the receptacle until a click is heard. Rotation of the plug in either direction engages a locking finger, which prevents further rotation.



To close the pilot circuit and mechanically lock the plug into the receptacle, turn the ring on the receptacle until the "1" lines up with the arrow. This turns the power on.



To disconnect, open the pilot circuit and unlock the plug by turning the ring until the "0" is aligned with the arrow. The power is now off.



Press firmly on the latch release button and simultaneously pull on the inlet. A slight rotation of the plug may also be required.

SP Single Pole - 600 A

CSA Ratings

- **Max Amperage & Voltage**
  600 A, 600 VAC
  To order devices for international applications and for IEC listings up to 800 A, 1000 VAC/1500 VDC, refer to international CE devices catalog.
- **Current Interruption Capability**
  Not for Current Interrupting
- **Horsepower Ratings**
  480 V 3Ø 500 hp
  600 V 3Ø 500 hp
  CSA hp rated when auxiliary pilots are wired to control motor control circuit.
- **Environmental Ratings**
  IP66/IP67
- **Temperature Range**
  Min -15°F/Max 140°F
- **Wiring Capacity**
  Min 2/0 Max 777 MCM
- **Applicable Standards**
  CSA C22.2 NO. 182.1•, NOM
  (•Listing applies to AC devices only)
- **Pilot Wiring**
  1A, 240 VAC, 14 AWG (Prewired)

! Remember to add installation accessories to your order

Suffix	Range
-5B	.875 - 1.000"
-5C	1.000 - 1.125"
-5D	1.125 - 1.250"
-5E	1.250 - 1.375"
-8A	1.250 - 1.375"
-8B	1.312 - 1.437"
-8C	1.438 - 1.562"
-8D	1.562 - 1.688"

Contact MELTRIC for IEC/CE Part Numbers



Receptacle
(sold as a set)
female on angle adapter



Connector*
(sold as a set)
female on handle



Receptacle
(replacement)
female

North American Configurations

VOLTAGE	POLARITY	REC PART # ON ANGLE ADAPTER	CONNECTOR PART # ON HANDLE	REC PART # REPLACEMENT
≤ 250 V	L1	44-47001-P80	44-43001-P80	44-44001-P80
≤ 250 V	L2	44-47002-P80	44-43002-P80	44-44002-P80
≤ 250 V	L3	44-47003-P80	44-43003-P80	44-44003-P80
≤ 250 V	NEUTRAL	44-4700N-P80	44-4300N-P80	44-4400N-P80
	GROUND	44-4700T-P80	44-4300T-P80	44-4400T-P80
	POSITIVE	44-4700P	44-4300P	44-4400P
	NEGATIVE	44-4700M	44-4300M	44-4400M
> 250 V	L1	44-47001-P88	44-43001-P88	44-44001-P88
> 250 V	L2	44-47002-P88	44-43002-P88	44-44002-P88
> 250 V	L3	44-47003-P88	44-43003-P88	44-44003-P88
> 250 V	NEUTRAL	44-4700N-P88	44-4300N-P88	44-4400N-P88



Inlet
(sold as a set)
male on angle adapter



Plug*
(sold as a set)
male on handle



Inlet
(replacement)
male

North American Configurations

VOLTAGE	POLARITY	INLET PART # ON ANGLE ADAPTER	PLUG PART # ON HANDLE	INLET PART # REPLACEMENT
≤ 250 V	L1	44-49001-P80	44-41001-P80	44-48001-P80
≤ 250 V	L2	44-49002-P80	44-41002-P80	44-48002-P80
≤ 250 V	L3	44-49003-P80	44-41003-P80	44-48003-P80
≤ 250 V	NEUTRAL	44-4900N-P80	44-4100N-P80	44-4800N-P80
	GROUND	44-4900T-P80	44-4100T-P80	44-4800T-P80
	POSITIVE	44-4900P	44-4100P	44-4800P
	NEGATIVE	44-4900M	44-4100M	44-4800M
> 250 V	L1	44-49001-P88	44-41001-P88	44-48001-P88
> 250 V	L2	44-49002-P88	44-41002-P88	44-48002-P88
> 250 V	L3	44-49003-P88	44-41003-P88	44-48003-P88
> 250 V	NEUTRAL	44-4900N-P88	44-4100N-P88	44-4800N-P88

*Note: Plugs and Connectors come standard with .750-.875 cable range. For other sizes please refer to table to the left.

INSTALLATION ACCESSORIES – SIZE S

When properly installed, all accessories meet or exceed the environmental ratings of the devices they are mounted to; unless otherwise noted.





CRIMPING LUGS

INTERNAL DIAMETER		STRAIGHT W/TERMINAL	STRAIGHT THREADED	FLEXIBLE WIRING*	COARSE WIRING
in	mm	PART #	PART #	AWG	AWG
.43	11	**454A50C**	**454A50D**	1/0	2/0
.51	13.1	**454A70C**	**454A70D**	2/0, 3/0	3/0, 4/0
.57	14.5	**454A95C**	**454A95D**	4/0	250
.64	16.2	**454A12C**	**454A12D**	262	300
.71	18	**454A15C**	**454A15D**	300, 313	350
.81	20.6	**454A18C**	**454A18D**	350+, 373	400, 500
.91	23.1	**454A24C**	**454A24D**	444+, 500, 535	600
1.03	26.1	**454A30C**	**454A30D**	646	750
1.15	29.2	**454A40C**	**454A40D**	750[2], 777[2]	800[2]

Notes: *Class H & I. UL listing performed with Greenlee EK6IDL11 dieless tool and Dewalt DCE300M2 with Greenlee KC12 dies. + Only for use with Greenlee EK6IDL11 dieless tool. [2] Only for use with Greenlee 1990 dieless manual hydraulic tool.

HANDLES

HANDLE	CABLE OUTSIDE DIAMETER	PART #
	.750-.875"	**44-4A753-A**
	.875-1.000"	**44-4A753-B**
	1.000-1.125"	**44-4A753-C**
	1.125-1.250"	**44-4A753-D**
	1.250-1.375"	**44-4A753-E**
	1.250-1.375"	**44-4A783-A**
	1.312-1.437"	**44-4A783-B**
	1.438-1.562"	**44-4A783-C**
	1.562-1.688"	**44-4A783-D**

ACCESSORIES

ANGLES

METAL ANGLE		PART #
	45°	**454A027**

DRAWBAR

		PART #
	Handle	**454A876**
	Plates (2)	**454A396**
	Handle and Plates (2)	**454A376**

PADLOCKING SYSTEM

	PART #
	**454A843**

Dimensions Inlet/Receptacle – Provided in Inches

Dimensions do not show drawbar, are for reference only and may change depending on accessories used. For precise dimensions contact MELTRIC Engineering.

SCAN ME »

Inlet

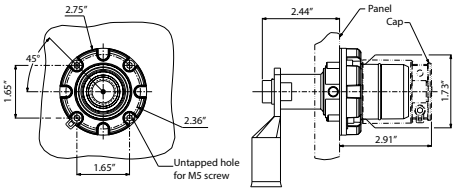

Receptacle

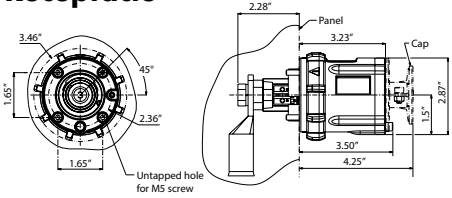

Connector on Handle

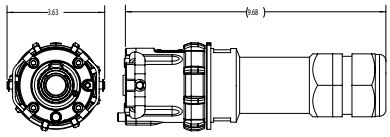

Receptacle on Angle Adapter

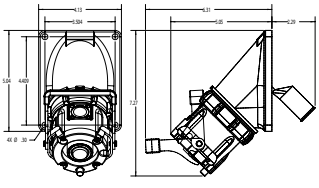

Plug on Handle

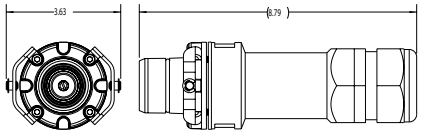

Inlet on Angle Adapter

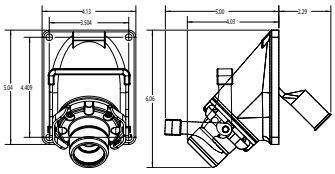

45° Inclined Receptacle/Angle with Plug

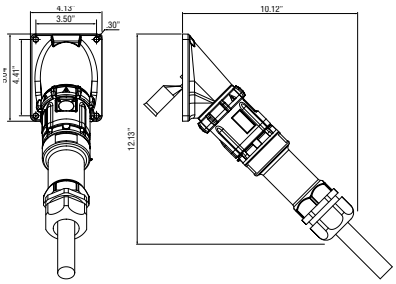

45° Inclined Inlet/Angle with Connector

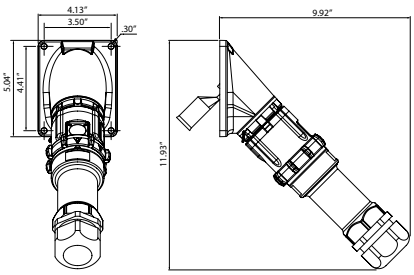

DSP400

Single Pole
High Amperage





Main Advantages

- Poly Casing
- Up to 480 VAC
- Rated IP66/IP67/IP69/IP69K
- Two additional pilot contacts

- Features and Ratings p. 150
- DSP400 p. 151
- Dimensions p. 153

SCAN ME »

PRODUCT FEATURES

Standard Lockout/Tagout Provisions

Allows plug to be easily locked out and tagged. Included padlock pawl allows lockout/tagout of the receptacle.

Casing

Fiberglass reinforced thermoplastic polyester material offers great resistance to impact, corrosion and harsh environmental conditions.

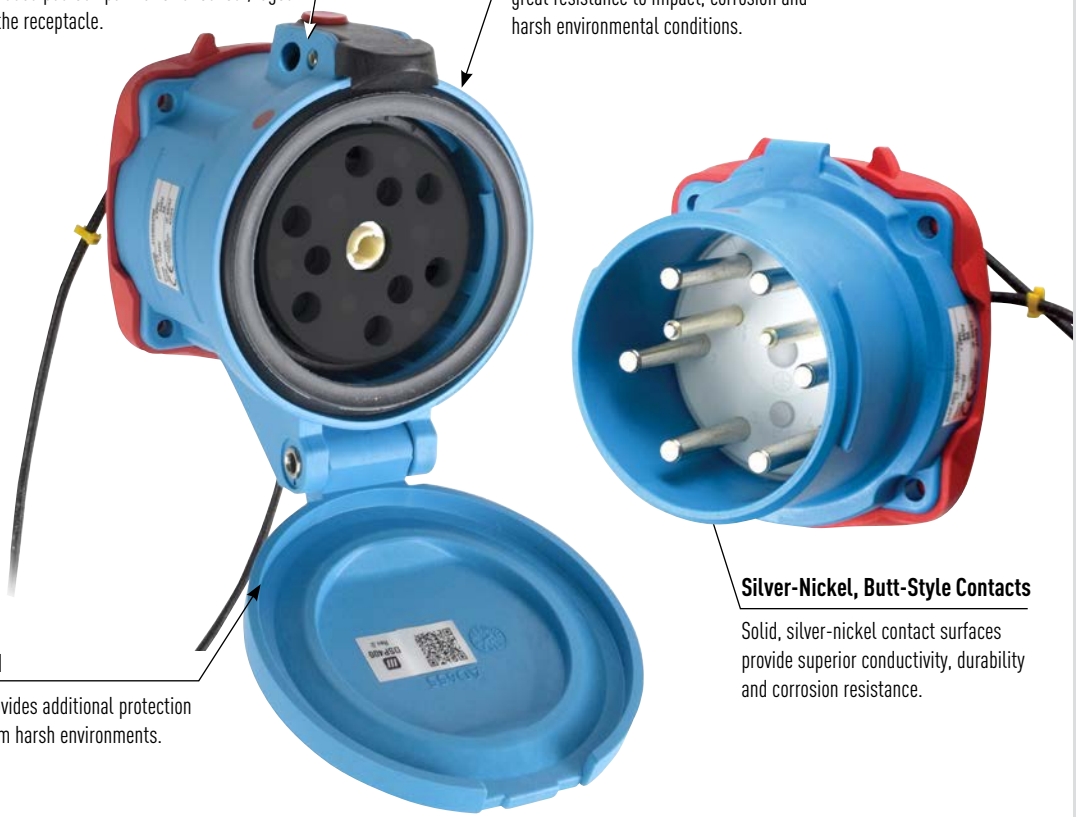

Silver-Nickel, Butt-Style Contacts

Solid, silver-nickel contact surfaces provide superior conductivity, durability and corrosion resistance.

Lid

Provides additional protection from harsh environments.

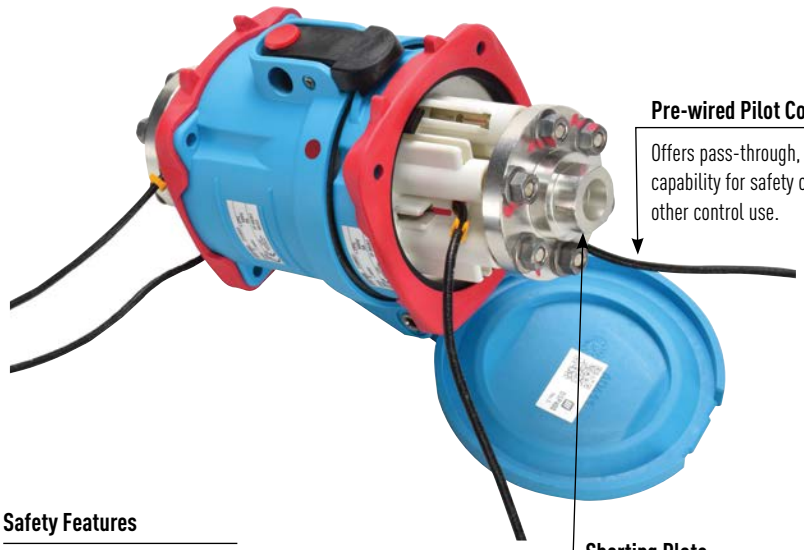

Pre-wired Pilot Contacts

Offers pass-through, 10 A wiring capability for safety circuit or other control use.

Safety Features

Designed with mechanical (rotational position) and visual (gasket color) differentiation of phases to prevent intermating.

Shorting Plate

Ties all phase contacts together to convert multiple contact device into single pole.

Operating Instructions



When the plug and receptacle are latched together, the circuit is connected.



Pressing the pawl breaks the connection and opens the circuit. The plug is ejected to its rest position; The contacts are now de-energized.



Rotating the de-energized plug 30° counterclockwise closes the safety shutter and frees the plug to be withdrawn from the receptacle.



The plug and the receptacle are separated. The safety shutter prevents access to live parts.

5 To reconnect, align red dots, insert plug into receptacle, rotate 30° clockwise, and apply insertion force.

DSP400 Single Pole - 400 A

Ratings

- **Max Amperage & Voltage**
  400 A, 480 VAC, 750 VDC
- **Current Interruption Capability**
  Not for Current Interrupting
- **Environmental Ratings**
  IP66/IP67/IP69/IP69K
- **Temperature Range**
  Min -40°F/Max 140°F
- **Wiring Capacity**
  Min 1/0 Max 600 MCM
  Aux Contacts: Prewired 4 mm²
- **Certifications**
  CE

Receptacle (female) without lug



Inlet (male) without lug



VOLTAGE	POLARITY	PART # POLY			PART # POLY	
		STANDARD LOCKOUT HOLE	STANDARD LOCKOUT HOLE NORMALLY CLOSED LID	NO LOCKOUT HOLE	STANDARD LOCKOUT HOLE	NO LOCKOUT HOLE
≤ 250	L1	3164001843P80	3164001858P80	3164001P80	3168001843P80	3168001P80
≤ 250	L2	3164002843P80	3164002858P80	3164002P80	3168002843P80	3168002P80
≤ 250	L3	3164003843P80	3164003858P80	3164003P80	3168003843P80	3168003P80
≤ 250	NEUTRAL	316400N843P80	316400N858P80	316400NP80	316800N843P80	316800NP80
	GROUND	316400T843P80	316400T858P80	316400TP80	316800T843P80	316800TP80
	POSITIVE	316400P843P80	316400P858P80	316400PP80	316800P843P80	316800PP80
	NEGATIVE	316400M843P80	316400M858P80	316400MP80	316800M843P80	316800MP80
> 250	L1	3164001843P88	3164001858P88	3164001P88	3168001843P88	3168001P88
> 250	L2	3164002843P88	3164002858P88	3164002P88	3168002843P88	3168002P88
> 250	L3	3164003843P88	3164003858P88	3164003P88	3168003843P88	3168003P88
> 250	NEUTRAL	316400N843P88	316400N858P88	316400NP88	316800N843P88	316800NP88

Straight Barrel Lugs





CRIMPING LUGS

INTERNAL DIAMETER		STRAIGHT W/TERMINAL	STRAIGHT THREADED	FLEXIBLE WIRING*	COARSE WIRING
in	mm	PART #	PART #	AWG	AWG
.43	11	**454A50C**	**454A50D**	1/0[A]	2/0
.51	13.1	**454A70C**	**454A70D**	2/0, 3/0	3/0, 4/0
.57	14.5	**454A95C**	**454A95D**	4/0	250
.64	16.2	**454A12C**	**454A12D***	262	300
.71	18	**454A15C**	**454A15D***	300, 313	350
.81	20.6	**454A18C**	**454A18D***	350[B], 373	400, 500
.91	23.1	**454A24C**	**454A24D***	444[B], 500, 535	600

Notes:

* Class H & I

[A] The ground conductor shall be limited to a maximum size of 1/0 AWG.
UL listing performed with Greenlee EK6IDL11 dieless tool and Dewalt DCE300M2 with Greenlee KC12 dies. [B] Only for use with Greenlee EK6IDL11 dieless tool.

* Spacer 514M0-25 will be required for use with a handle.

Handle Option Guide pgs 243-244

INSTALLATION ACCESSORIES – SIZE 4

When properly installed, all accessories meet or exceed the environmental ratings of the devices they are mounted to; unless otherwise noted.

HANDLES

HANDLE WITH NPT	PART # POLY
1/2"	**514P0N05**
3/4"	**514P0N07**
1"	**514P0N10**
1 1/4"	**514P0N12**
1 1/2"	**514P0N15**



For available cord grips, see pg 231.

POLY HANDLE WITH CORD GRIP	CABLE RANGE	PART #
	.680-.980"	**714P0DP4**
	.980-1.260"	**714P0EP4**
	1.260-1.560"	**714P0FP1**



Spacer 514M0-25 to be used with handle accessory when wiring device with 300 MCM or larger wire.

BOXES

POLY WALL BOX WITH ANGLE



* 181.24 in^3

70°		**514C7000**
	Ground Bar	**51AA089**

70° poly boxes are not drilled.

* Interior volume with receptacle installed.

POLY ANGLE WITH METAL BOX WITH NPT



* 177.7 in^3

70°	1/2"	**714C7N05**
70°	3/4"	**714C7N07**
70°	1"	**714C7N10**
70°	1 1/4"	**714C7N12**
70°	1 1/2"	**714C7N15**

* Interior volume with receptacle installed.

ANGLES

POLY ANGLE





30°	**514M3**	Compatible with all straight threaded lugs.
70°	**514M7**	Compatible with all straight terminal lugs.

MISCELLANEOUS ACCESSORIES

FINGER DRAWPLATES



31-6A346 — Set of Two (2) Recommended for all assembly applications, for facilitated mating.

SPACER



514M0-25 — 1 inch thick spacer to be used with handles using 300 MCM wire and larger.

PROTECTIVE INLET/PLUG CAP



31-6A426 — For Inlets/Plugs Only.

SPRING-LOADED PADLOCKABLE INLET/PLUG CAP



31-6A226 — For Poly Inlets/Plugs Only. In order to achieve max water ingress protection of Type 3R/IP55, spring loaded caps should be ordered with inlets equipped with -A155 suffix.

EASY RETROFIT ADAPTER PLATES



see pg 246 — Mount to existing boxes.

RECEPTACLE LOCKING PIN



LP-843

DSP400 DIMENSIONS – Provided in Inches

Dimensions are for reference only and may change depending on accessories used. For precise dimensions contact MELTRIC Engineering.

SCAN ME >>

Plug on Receptacle

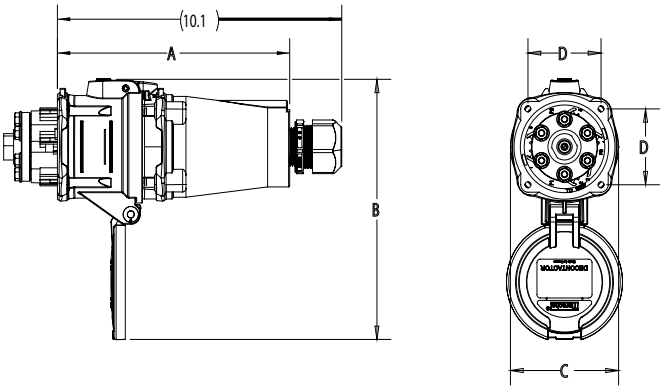

PRODUCT	A	B	C	E
DSP400	8.29	8.94	3.86	2.59

Plug/Connector

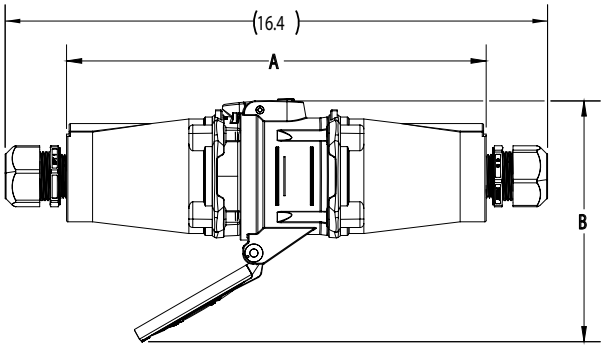

PRODUCT	A	B
DSP400	12.70	7.28

30° Angle/Receptacle/Plug

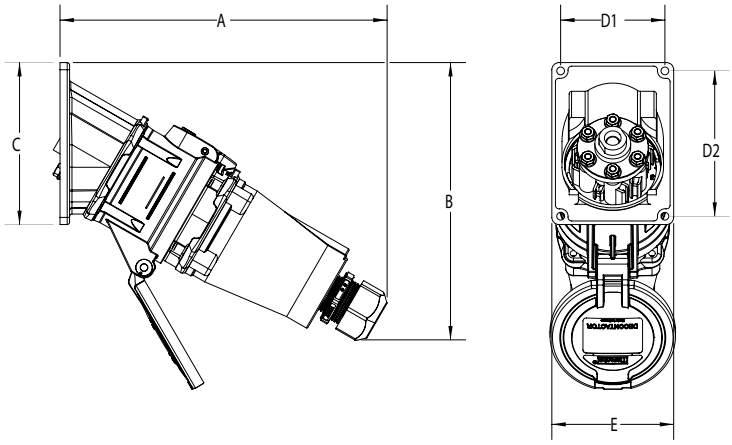

PRODUCT	A	B	C	D1	D2	E
DSP400	10.78	9.17	5.35	3.44	4.80	4.02

70° Angle/Receptacle/Plug

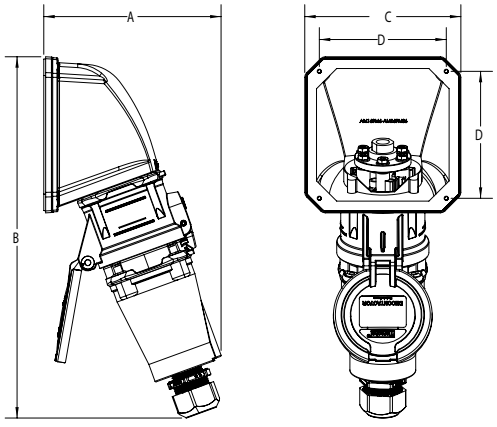

PRODUCT	A	B	C	D
DSP400	7.42	15.12	6.54	5.31



HAZARDOUS LOCATION

Plugs & Receptacles

MELTRIC offers a wide range of hazardous location devices for use in power supply and control applications. Each device features our butt-style contact technology that maximizes durability and performance.



DXN POLY POWER CONNECTORS P. 159

- ATEX or cCSAus rated for Zone 1 & 21 and Class I & II Div 2
- Horsepower rated
- Compact design
- 20 A, 30 A and 60 A sizes



DXA 1 POWER CONNECTORS P. 171

- ATEX or cCSAus rated for Zone 1 & 21 and Class I & II Div 2
- Robust metal construction
- 20 A sizes



DSN/DS POWER CONNECTORS P. 175

- cCSAus rated, Zone 2 and Class I Div 2
- Horsepower rated
- Robust metal construction for 60 A and above
- 20 A, 30 A, 60 A, 100 A, 150 A, and 200 A sizes



DR POWER CONNECTORS P. 189

- cCSAus rated, Zone 2 and Class I Div 2
- Robust metal construction for 60 A and above
- 30 A , 50 A, and 250 A sizes



DSDC POWER CONNECTORS P. 195

- cCSAus rated, Zone 2 and Class I Div 2
- Robust metal construction for 60 A and above
- 20 A, 30 A, 60 A, 100 A and 200 A series



DX POWER CONNECTORS P. 197

- ATEX rated for Zone 1 & 21
- Rugged metal construction
- 20 A, 32 A, 63 A and 125 A series
- Up to 600 V, IP65



PNCX LOW POWER CONNECTORS P. 207

- ATEX rated for Zone 1/21
- IP66/IP67/IP69 water and dust protection
- 5 A, 250 V non-current interrupting

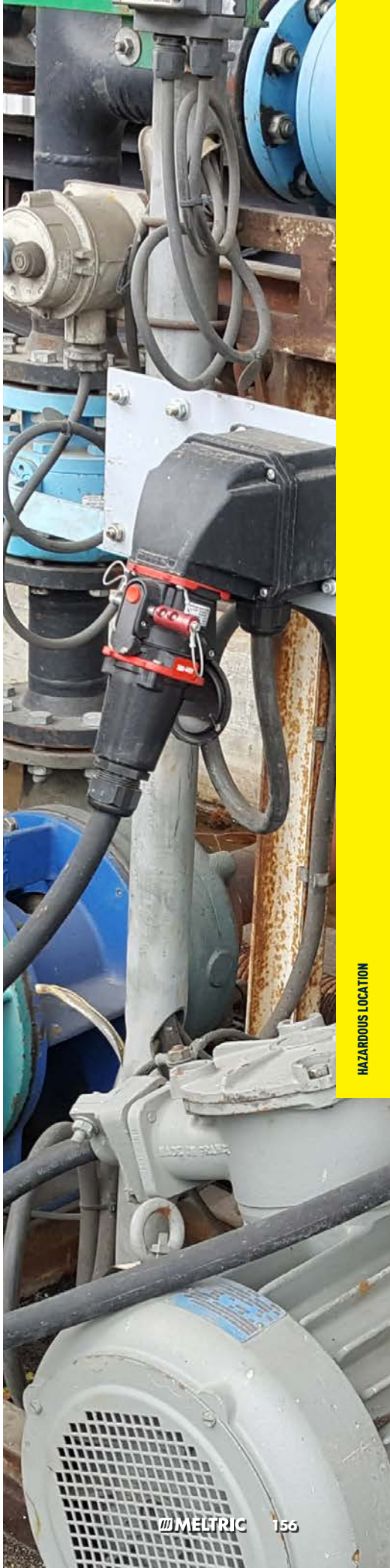

The MELTRIC Advantage

MELTRIC offers a range of hazardous duty rated devices for use in power supply and control applications. Each device features our butt-style contact technology that maximizes durability and performance. Depending on application needs, most devices can be configured for use in-line and wall mounted applications. Hazardous Duty Products prevent the ignition of hazardous gases or dusts, eliminating explosions that may cause personal injury or damage to equipment and the facility. With specialty self-wiping silver-nickel contacts, that clean dust and particles off the contact tips, operational function is ensured for thousands of cycles.

Common industry applications:

- Chemical plants
- Pharmaceutical plants
- Oil and gas facilities
- Grain silos
- Wood processing plants
- Plastics plants
- Wastewater plants



"Flush Mounted" DX Series plug and receptacle



"Inline" DXN Series plug and connector

Explanation of Area Classifications and Relevant Listings

The hazardous location area classifications and ratings used in most of North America differ from those used in most of the rest of the world. The North American approach has historically been to use a Class and Division system to identify the different levels of explosion hazards, while the international approach is based on Zones. In recent years, there has been recognition of the Zone classifications in the NEC and CEC, but the vast majority of the area classifications in North America continue to be based on the Class and Division system. The table below shows the relationship between the Class/Division and Zone based classification systems.

Gas

Explosive atmosphere	Continuously present	May occur in normal conditions	May appear accidentally or in abnormal conditions
Class & Division	Class I, Division 1		Class I, Division 2
Zone	Zone 0	Zone 1	Zone 2

Dust

Explosive atmosphere	Continuously present	May occur in normal conditions	May appear accidentally or in abnormal conditions
Class & Division	Class II, Division 1		Class II, Division 2
Zone	Zone 20	Zone 21	Zone 22

MELTRIC offers hazardous locations products rated for use in Zone 1, Zone 2, Zone 21, Zone 22, Class I Division 2 and Class II Division 2 areas as **shown by the yellow highlighted cells in the table above**. The area classifications, ratings and certifications that apply to each of the various products is shown in the following product specification table.

Selecting the Right Hazardous Location Rated Plug and Receptacle

Hazardous Location Product Specifications

Zone 1/21 & 2/22, Class I & II Division 2 Devices

Product Type	Housing Material	Maximum Number of Contacts	Electrical Ratings				Certifications	Environmental Ratings	Wiring Capacity		Wiring Connection	Catalog Pg
			Max VAC	Amperage	Current Interruption	HP@MAX Voltage			Min/Max			
DXN20	POLY	3P+N+G	600	20 A	YES	7.5 hp	cCSAus	IP66/IP67	16 AWG	10 AWG	Screw	163
DXN30	POLY	3P+N+G	600	30 A	YES	15 hp	cCSAus	IP66/IP67	14 AWG	6 AWG	Screw	165
DXN30	POLY	3P+N+G+2 AUX	550	30 A	YES	15 hp	cCSAus	IP66/IP67	14 AWG	6 AWG	Screw	165
DXN60	POLY	3P+N+G	600	60 A	YES	20 hp	cCSAus	IP66/IP67	10 AWG	4 AWG	Screw	167
DXN60	POLY	3P+N+G+2 AUX	550	60 A	YES	20 hp	cCSAus	IP66/IP67	10 AWG	4 AWG	Screw	167
DXA1	METAL	3P+N+G	600	20 A	YES	7.5 hp	cCSAus	IP66/IP67	16 AWG	10 AWG	Screw	173
SPeX	POLY	1P	600	600 A	NO	-	cCSAus	IP65/IP66	2/0 AWG	750 MCM	Lug	217

Zone 2, Class I Division 2 Devices

Product Type	Housing Material	Maximum Number of Contacts	Electrical Ratings				Certifications	Environmental Ratings	Wiring Capacity		Wiring Connection	Catalog Pg
			Max VAC	Amperage	Current Interruption	HP@MAX Voltage			Min/Max			
DS20	POLY	3P+N+G+2 AUX	600	20 A	NO	10 hp	cCSAus	Type 4X	14 AWG	8 AWG	Screw	177
DS30	POLY	3P+N+G+4 AUX	600	30 A	NO	15 hp	cCSAus	Type 4X	14 AWG	4 AWG	Screw	179
DS60	METAL	3P+N+G+4 AUX	600	60 A	NO	25 hp	cCSAus	Type 4X	10 AWG	2 AWG	Screw	181
DS100C	METAL OR POLY	3P+N+G+4 AUX	600	100 A	NO	50 hp	cCSAus	Type 4X	10 AWG	2 AWG	Screw	183
DSN150	METAL	3P+N+G+6 AUX	600	150 A	NO	75 hp	cCSAus	Type 4X	4 AWG	2/0 AWG	Screw	185
DS200	METAL	3P+N+G+2 AUX	600	200 A	NO	100 hp	cCSAus	Type 4X	4 AWG	4/0 AWG	Screw	187
DR30	POLY	3P+N+G+2 AUX	600	30 A	NO	-	cCSAus	Type 4X	14 AWG	8 AWG	Screw	189
DR50	POLY	3P+N+G+4 AUX	600	50 A	NO	-	cCSAus	Type 4X	14 AWG	4 AWG	Screw	191
DR250	METAL	3P+N+G+2 AUX	600	250 A	NO	-	cCSAus	Type 4X	4 AWG	4/0 AWG	Screw	193

Zone 2, Class I Division 2 Devices for Direct Current

Product Type	Housing Material	Maximum Number of Contacts	Electrical Ratings				Certifications	Environmental Ratings	Wiring Capacity		Wiring Connection	Catalog Pg
			Max VDC	Amperage	Current Interruption	HP@MAX Voltage			Min/Max			
DSDC1	POLY	2P+G	250	20 A	NO	-	cCSAus	Type 4X	14 AWG	8 AWG	Screw	195
DSDC3	POLY	2P+G	250	30 A	NO	-	cCSAus	Type 4X	14 AWG	4 AWG	Screw	195
DSDC6	METAL OR POLY	2P+G	250	60 A	NO	-	cCSAus	Type 4X	10 AWG	2 AWG	Screw	195
DSDC9	METAL	2P+G	250	100 A	NO	-	cCSAus	Type 4X	4 AWG	2/0 AWG	Screw	195
DSDC2	METAL	2P+G	250	200 A	NO	-	cCSAus	Type 4X	4 AWG	4/0 AWG	Screw	195

International Configurations & Ratings

Product Type	Housing Material	Maximum Number of Contacts	Electrical Ratings				Certifications	Environmental Ratings	Wiring Capacity		Wiring Connection	Catalog Pg
			Max VAC	Amperage	Current Interruption	HP@MAX Voltage			Min/Max			
DXN1	POLY	3P+N+G	550	20 A	YES	-	ATEX, IECEX	IP66/IP67	16 AWG	10 AWG	Screw	163
DXN3	POLY	3P+N+G	750	32 A	YES	-	ATEX, IECEX	IP66/IP67	14 AWG	6 AWG	Screw	165
DXN3	POLY	3P+N+G+2 AUX	550	32 A	YES	-	ATEX, IECEX	IP66/IP67	14 AWG	6 AWG	Screw	165
DXN6	POLY	3P+N+G	750	63 A	YES	-	ATEX, IECEX	IP66/IP67	10 AWG	4 AWG	Screw	167
DXN6	POLY	3P+N+G+2 AUX	550	63 A	YES	-	ATEX, IECEX	IP66/IP67	10 AWG	4 AWG	Screw	167
DXA1	METAL	3P+N+G	600	20 A	YES	-	ATEX, IECEX	IP66/IP67	16 AWG	10 AWG	Screw	173
DX1	METAL	3P+N+G	750	20 A	YES	-	ATEX, IECEX	IP65	14 AWG	8 AWG	Screw	201
DX3	METAL	3P+N+G	750	32 A	YES	-	ATEX, IECEX	IP65	14 AWG	8 AWG	Screw	202
DX6	METAL	3P+N+G	750	63 A	YES	-	ATEX, IECEX	IP65/IP66	6 AWG	1/0 AWG	Screw	203
DX9	METAL	3P+N+G	750	125 A	YES	-	ATEX, IECEX	IP65/IP66	2 AWG	2/0 AWG	Screw	204
PNCX	POLY	3P+N+G	250	5 A	NO	-	ATEX, IECEX	IP66/IP67/IP69	20 AWG	14 AWG	Screw	207
PXN12c	METAL	11P+G	220	10 A	NO	-	ATEX, IECEX	IP65/IP66	16 AWG	14 AWG	Solder/Crimp	211
DXN25c	METAL	24P+G	440	10 A	NO	-	ATEX, IECEX	IP66/IP67	18 AWG	14 AWG	Solder/Crimp	213
DXN37c	METAL	36P+G	220	10 A	NO	-	ATEX, IECEX	IP66/IP67	18 AWG	14 AWG	Solder/Crimp	213
SPeX	POLY	1P	1000	680 A	NO	-	ATEX, IECEX	IP65/IP66	2/0 AWG	750 MCM	Lug	217

DXN
Hazardous Location



Main Advantages

- Dead-front Safety Shutter protects user from emergency and accidental disconnection
- Current interrupting for safe disconnection under load
- Easy to handle due to compact, lightweight design
- Available with in-line and wall/panel mounted configurations
- CSA certified with available options for ATEX and IECEx for use in Zones 1 and 2 (gas) and Zones 21 and 22 (dust)

- Features and Ratings p. 160
- Certifications & Testing p. 161
- Operation p. 162
- DXN20 p. 163
- DXN30 p. 165
- DXN60 p. 167
- Dimensions p. 169

SCAN ME >>

WATCH ME >>

PRODUCT FEATURES

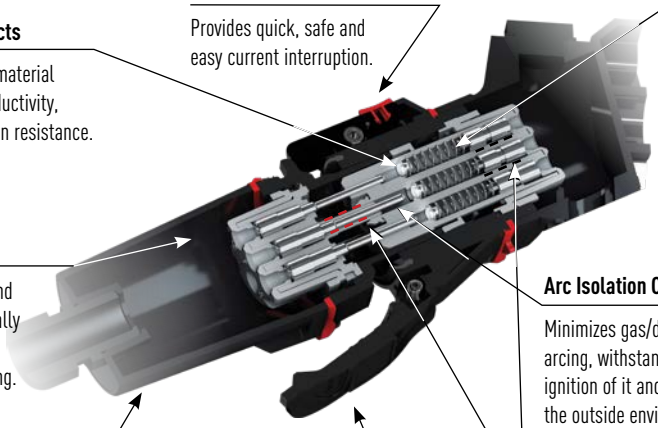

Silver-Nickel Contacts

Silver-nickel contact material provides superior conductivity, durability and corrosion resistance.

Pushbutton Pawl / OFF Button

Provides quick, safe and easy current interruption.

Spring-Loaded Butt-Style Contacts

Ensures optimal contact force and superior electrical performance over thousands of operations.

Hazardous Location Termination Areas

Includes enhanced creepage and clearance distances and specially designed terminals to ensure perfect and permanent clamping.

Arc Isolation Chamber

Minimizes gas/dust volume present during arcing, withstands internal pressure due to ignition of it and isolates the ignition from the outside environment.

Casing

Self-extinguishing, non-static, material provides outstanding resistance to mechanical abuse and chemicals.

Lid

When closed, the lid maintains IP66/IP67 protection for the receptacle after removal of the plug.

Arc-Extinguishing Flame Path

Dissipates internal pressure created during arcing while also preventing any associated ignition sources from reaching the surrounding atmosphere.

General Ratings

Amperage	20 to 60 A
Voltage	600 VAC Max
Frequency	50-400 Hz
Horsepower	.75 to 20 hp
Environmental	IP66/IP67
Temperature	Min -15°F/Max 140°F

DXN30 and DXN60 devices are 550 VAC if ordered with optional auxiliary contacts

Highlighted Feature

Dead-front



The dead-front on the DXN receptacle provides protection from accidental tool and wire insertion.

Hazardous Location Listings (CSA or ATEX)

CSA	ATEX
Ex de IIC T*Gb	II 2 G/D
Ex tb IIIC T*Db	Ex de IIC T*Gb Ex tb IIIC T*Db
Class I Zone I AEx de IIC T*Gb	
Zone 21 AEx tD T*Db	
Class I Division 2 Gr A,B,C,D	
Class II Division 2 Gr E,F,G	

* See temperature tables in product sections. See following page for additional ratings detail.

Plug & Receptacle Listings (CSA or ATEX)

CATEGORY	CSA	IEC
Plugs and Receptacles	C22.2 No. 182.1	60309-1

NOM listing available. Contact MELTRIC Engineering for more information.

Operating Instructions



To connect, align the red dots, push the plug partially in, then turn clockwise slightly to line up the latch with the catch.



Push the plug fully home until it is held in place by the latch; the circuit is now energized.



To disconnect, depress the latch and pull the plug simultaneously. This opens the circuit. The plug contacts are now de-energized.



Rotate 30° counterclockwise and then withdraw the plug. The safety shutter prevents access to live parts.

DXN Certifications

Hazardous Duty Certification (example)

DXN's are offered with CSA or ATEX certifications for use in hazardous locations.

CSA

-40°C ≤Ta≤ +60°C

Class I Zone 1 AEx de IIC T5, Gb

Zone 21, AEx tD T90°C Db

Class I Division 2 Gr A,B,C,D

Class I – Indicates suitability for use in applications where flammable gases, vapors, or mists may be present.

Zone I – Indicates suitability for use in applications where an explosive environment is likely to occur in the air in sufficient quantities to produce explosive or ignitable mixtures under normal operating conditions.

Division 2 – Indicates suitability for use where exposure to the hazard occurs under abnormal conditions.

GR A,B,C,D – Indicates suitability for use in areas that may contain acetylene, hydrogen, ethylene, or propane.

Class II Division 2 Gr E,F,G

Class II – Indicates suitability for use in applications where explosive dust atmosphere may occur.

Division 2 – Indicates suitability for use where hazard exposure occurs under abnormal conditions.

GR E,F,G – Indicates suitability for use in areas where magnesium, coal or grain dust may occur.

CSA certification based on IEC 60079-0, 60079-1, 60079-7

ATEX and IECEx

II 2 G/D Ex de IIC T* Gb

Ex tb IIIC T* Db

-40°C ≤Ta≤ +60°C T5 T90°C

-40°C ≤Ta≤ +40°C T6 T70°C

II – Indicates suitability for installation in surface applications (as opposed to underground mine applications).

2 – Indicates suitability for use where a high level of protection is required and where the presence of an explosive atmosphere is likely to occur occasionally during normal operation (Zone 1 and Zone 21 environments).

G/D – Indicates suitability for installation in areas that may contain flammable gases, vapors/mists, or dusts.

T90°C* – Indicates a maximum surface temperature of the product of 90°C, at -40°C to 60°C ambient.

Ex de – Indicates that explosion protection is provided with (e) increased safety in the conductor termination area, and (d) flame proof chambers for making and breaking the current that can withstand the pressure of internal ignition and that prevent arcs, flame, or other ignition events from being communicated to the surrounding atmosphere.

IIC – Indicates suitability for installation in areas where exposure to any type of gas, including the most dangerous subdivision C gases may occur.

T6* – Temperature class – the maximum product surface temperature is 185°F (85°C) for ambient temperature of 104°F (40°).

ATEX certification was performed by LCIE. *Temperature ratings vary depending on product and ambient temperature. See specific product section for temperature ratings.

Electrical Performance Testing

	Key Performance Tests Passed				
Model	Mechanical Endurance	Electrical Endurance[1]	Overload Testing[2]	Temperature Rise (max)	Dielectric Test
DXN20	-	5000 Operations	50 Operations	30°C	2 x V (rated) + 1000 V
DXN30	1000 Cycles	1000 Operations	50 Operations	30°C	2 x V (rated) + 1000 V
DXN60	1000 Cycles	1000 Operations	50 Operations	30°C	2 x V (rated) + 1000 V

[1] @ 100% of rated current and voltage and 0.6 power factor [2] @125% of rated current, 110% of rated voltage, & 0.6 power factor

DXN Operation

Arcing is a natural occurrence when electrical contacts make and break under load. The purpose of a hazardous duty product is to prevent arcing from igniting hazardous gases or dusts present in the atmosphere into an explosion that may cause personal injury or damage to facilities and equipment. The DXN accomplishes this with specially designed flameproof arc chambers.

The arc isolation chambers are sized to minimize the amount of atmospheric gas or air/dust mixture that may ignite during arcing and are built to contain this internal mini-explosion and withstand the pressure that it generates. The length and width of the flameproof pathways are very precisely designed to provide for the effective dissipation of the pressure, while also ensuring that the arcing and internal ignitions of gases or air/dust mixture in the arc chamber are totally isolated from the surrounding atmosphere.

1 When the plug and receptacle are connected, the flameproof arc isolation chamber is completed with pressure relief/arc extinguishing pathways between the outer diameter of the plug contact and its associated contact hole in the safety shutter and between the main interior component and receptacle contact base.

2 DXN's are current interrupting rated devices. They can safely make and break under full load and also during moderate overload situations. During the making or breaking of the contacts, the arc isolation chamber completely contains any ignitions of gas or dust due to arcing and the flameproof pathways dissipate the pressure.

3 As the plug is being inserted or removed, the flameproof arc chamber and pathways are maintained. This ensures continuous hazardous duty protection and the safety of the user.

4 When the plug and receptacle are disconnected, the receptacle maintains a flameproof chamber. In this case, the flameproof pathway exists between the safety shutter and the main interior component. The shutter also prevents access to live parts, providing users with the safety of a dead-front. The plug must be inserted into the safety shutter and be rotated in order to access the receptacle contacts.

NOTE: While DXN devices are current interrupting (and can be safely disconnected under load in emergency or accidental situations), the devices are not Switch-Rated. DXN devices are not intended or advised for use as a primary disconnect in hazardous environments.

1

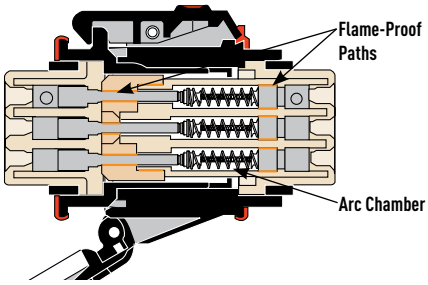

2

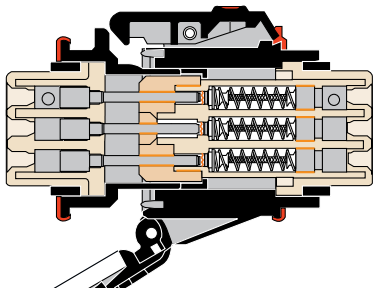

3

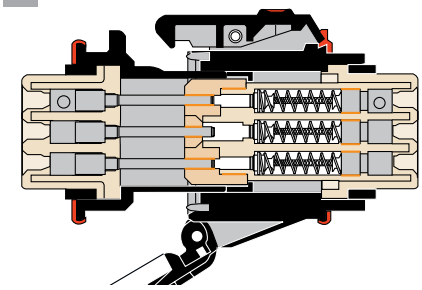

4

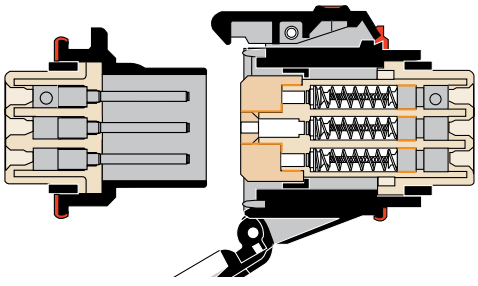

DXN20 Hazardous Location - 20 A

cCSAus Certifications DXN20

- **Max Amperage & Voltage**
  20 A, 600 VAC, 60 Hz
- **Current Interruption Capability**
  For current interrupting (AC)
- **Horsepower Ratings**

120 V	1Ø	.75 hp
240 V	1Ø	2 hp
208 V	3Ø	3 hp
240 V	3Ø	3 hp
480 V	3Ø	10 hp
600 V	3Ø	10 hp

- **Short Circuit Rating**
  25 kA Close & Withstand
  Testing was performed with RK1 30 A fuse sized at 400% of the highest full load motor ampacity associated with the devices hp rating.
  Note: Consult NEC for Short Circuit limits.
- **Environmental Ratings**
  IP66/IP67
- **Wiring Capacity**
  Based on THHN wire sizes.
  Min 16 AWG Max10 AWG
- **Applicable Standards**
  CSA C22.2 No. 182.1
- **Hazardous Location Ratings**
  -40°C ≤Ta ≤+60°C
  Ex de IIC T5 Gb Ex tb IIIC T90°C Db
  Class I Zone1 AEx de IIC T5 Gb
  Zone 21 AEx tD T90°C Db
  Class I Div 2 Gr A,B,C,D
  Class II Div 2 Gr E,F,G
  cCSAus 00.1144106X

Devices rated for hazardous locations are not returnable.

! Receptacles & Inlets must be mounted to a DXN handle, angle or wall box

Receptacle (female)



Standard DXN20 lid opens to 120° and can be adjusted to 180°

Inlet (male)



North American cCSAus Configurations

VOLTAGE	POLARITY	PART # POLY	PART # POLY
120 V	1P+N+G	22-14125-K16**	22-18125-K16**
125 V	1P+N+G	22-14075	22-18075
208 V	2P+G	22-14122-K16**	22-18122-K16**
208 V	3P+G	22-14123-K16**	22-18123-K16**
208 V	3P+N+G	22-14127-K16**	22-18127-K16**
250 V	2P+G	22-14072	22-18072
250 V	3P+G	22-14073	22-18073
250 V	2P+N+G	22-14076	22-18076
277 V	1P+N+G	22-14045	22-18045
480 V	2P+G	22-14042	22-18042
480 V	3P+G	22-14043	22-18043
480 V	3P+N+G	22-14047	22-18047
600 V	2P+G	22-14142	22-18142
600 V	3P+G	22-14143	22-18143
600 V	3P+N+G	22-14147	22-18147

RECEPTACLE OPTIONS	SUFFIX #	INLET OPTIONS	SUFFIX #
Padlock Pawl	**Recept # -843**	Without Lockout Hole	**Inlet # -A155**
Metal Pawl on Poly Receptacle	**Recept # -924**		
Self-Returning Lid (Manual Close)	**Recept # -R**		

**Product has changed and will not mate with prior 22-1416x and 22-1816x 120 V and 208 V configurations. Please contact customer service if product will be used with devices purchased prior to January 31, 2021.

ATEX/IECEx Certifications DXN1

- **Max Amperage & Voltage**
  20 A, 550 VAC, 50 Hz
- **Environmental** IP66/IP67
- **Ambient Temp** -40°C to +60°C
- **Hazardous Location Ratings**
  ATEX/IECEx Zones 1 & 2, 21 & 22

MARECHAL ELECTRIC MAROMME
Ex II2 G/D Ex de IIC T*Gb
Ex tb IIIC T*Db
-40 °C ≤ TA ≤ +60 °C T5 T90 °C
-40 °C ≤ TA ≤ +40 °C T6 T70 °C
IECEx LCI 09.0005X / LCIE 99 ATEX 6027X

See International Catalog (online) for additional product information.

Receptacle **Inlet**

IEC/CE Configurations (ATEX/IECEx)

VOLTAGE	POLARITY	PART # POLY	PART # POLY
20 - 24 V	2P	251408A	251808A
190 - 230 V	3P+E	2514033	2518033
220 - 250 V	1P+N+E	2514015	2518015
380 - 440 V	3P+E	2514013	2518013
380 - 440 V	3P+N+E	2514017	2518017
480 - 500 V	3P+E	2514093	2518093
480 - 500 V	3P+N+E	2514097	2518097

RECEPTACLE OPTIONS	SUFFIX #
Padlock Pawl w/shaft for 2 locks	**Recept # + 843**
Self-Returning Lid (Manual Close)	**Recept # + R**

Handle Option Guide pgs 243-244

INSTALLATION ACCESSORIES – SIZE 1

When properly installed, all accessories meet or exceed the environmental ratings of the devices they are mounted to; unless otherwise noted.

HANDLES

POLY HANDLE WITH NPT		PART #	
	1/2"	22-1A013-12	For use in Class I or II Division 2 or Class 1 Zone 1 or Zone 21 depending on fitting used. Fitting manufactured by others.
	3/4"	22-1A013-34	

POLY HANDLE WITH CORD GRIP WITH CABLE RANGE			
	.240-.470"	251P0BPA	For use in Class I or II Division 2, Class I Zone I or Zone 21
	.390-.550"	251P0BPB	
	.350-.630"	251P0CPD	
	.510-.710"	251P0CPC	-20°C ≤ Ta ≤ +85°C

ANGLES

POLY ANGLE		
	30°	22-1A057

MISCELLANEOUS ACCESSORIES

FINGER DRAWPLATES		
	61-1A346	Set of Two (2) Recommended for all assembly applications, for facilitated mating.

PROTECTIVE INLET/PLUG CAP		
	22-1A426	For Inlets/Plugs Only.

RECEPTACLE LOCKING PIN		
	LP-843	Requires Padlockable Pawl option (-843) on receptacle.

BOXES

POLY WALL BOX WITH NPT			PART #	
 NPT * 4.5 in³	30°	1/2"	22-1A023-12-T	NPT Thread on top
	30°	3/4"	22-1A023-34-T	* Interior volume with receptacle installed.

POLY WALL BOX WITH NPT			
 * 4.5 in³ NPT	30°	1/2"	22-1A023-12-B
	30°	3/4"	22-1A023-34-B

NPT Thread on bottom

* Interior volume with receptacle installed.

POLY ANGLE WITH METAL BOX WITH NPT			
 * 74.6 in³	70°	1/2"	221C7N05
	70°	3/4"	221C7N07
	70°	1"	221C7N10
	70°	1 1/4"	221C7N12
	70°	1 1/2"	221C7N15

NPT is drilled on top of metal box as standard. To switch from top to bottom the box can be rotated.

* Interior volume with receptacle installed.

For other configurations, contact Customer Service.

POLY WALL BOX 120X120 WITHOUT TERMINAL BLOCKS WITH CORD GRIP				
 * 82.0 in³	70°	1/2"	.200-.350"	221C7BPJ
	70°	1/2"	.240-.470"	221C7BPA
	70°	1/2"	.390-.550"	221C7BPB
	70°	3/4"	.350-.630"	221C7CPD
	70°	3/4"	.510-.710"	221C7CPC
	70°	1"	.510-.790"	221C7DPF
	70°	1"	.710-.980"	221C7DPE

For use in Class I or II Division 2, Class I Zone I or Zone 21

1 hole with a poly cable gland.

! Accessories rated for hazardous locations are not returnable.

IEC/CE Accessories (ATEX/IECEx)

! IEC/CE accessories can only be used with IEC/CE devices.

HANDLES

POLY HANDLE WITH POLY CABLE GLAND		PART #	
	5-10 mm	251A25316P	For use in Zones 1 & 2 Zones 21 & 22
	12-18 mm	251A25325P	
	16-25 mm	251A25332P	

POLY HANDLE WITH METAL CABLE GLAND			
	8-10 mm	251A25320M	With Earth continuity
	12-14 mm	251A25325M	
	18-24 mm	251A25332M	

ANGLES

POLY ANGLE			
	30°	251A057	
	70°	251A757	For panel mounting. Not a replacement part for 70° wall box.

BOXES

POLY WALL BOX			PART #
	30°	5-10 mm	251AB5316P
	30°	10-14 mm	251AB53
	30°	12-18 mm	251AB5325P

POLY WALL BOX 120X120 WITHOUT TERMINAL BLOCKS			
	70°	10-14 mm	251AB8820P
	70°	12-18 mm	251AB8825P
	70°	16-25 mm	251AB8832P

1 hole with a poly cable gland.

POLY WALL BOX 120X120 WITH 4MM2 TERMINAL BLOCKS			
	70°	10-14 mm	251A08820P
	70°	12-18 mm	251A08825P

With 2 holes (1 with a cable gland + 1 with a stopping plug), with 8+2E 4 mm² terminals blocks + 2.5 mm² wires, wiring 1-4 mm². For loop in loop out wiring.

-40°C ≤ Ta ≤ +60°C T5 T90°C
-40°C ≤ Ta ≤ +40°C T6 T70°C

HAZARDOUS LOCATION

DXN30 Hazardous Location - 30 A

cCSAus Certifications DXN30

- **Max Amperage & Voltage**
  30 A, 600 VAC, 60 Hz
- **Current Interruption Capability**
  For current interrupting (AC)
- **Horsepower Ratings**

120 V	1Ø	1 hp
240 V	1Ø	3 hp
208 V	3Ø	5 hp
240 V	3Ø	5 hp
480 V	3Ø	10 hp
600 V	3Ø	15 hp

- **Short Circuit Rating**
  25 kA Close & Withstand
  Testing was performed with RK1 70 A fuse sized at 400% of the highest full load motor ampacity associated with the devices hp rating.
  Note: Consult NEC for Short Circuit limits.
- **Environmental Ratings**
  IP66/IP67
- **Wiring Capacity**
  * Based on THHN wire sizes.
  Min 14 AWG Max 6 AWG
  Aux Contacts: Max 10 AWG
- **Applicable Standards**
  CSA C22.2 No. 182.1
- **Hazardous Location Ratings**
  -40°C ≤Ta ≤+60°C
  Ex de IIC T5 Gb Ex tb IIIC T77°C Db
  Class I Zone1 AEx de IIC T5 Gb
  Zone 21 AEx tD T77°C Db
  Class I Div 2 Gr A,B,C,D
  Class II Div 2 Gr E,F,G
  cCSAus 00.1144106X

Devices rated for hazardous locations are not returnable.

! Receptacles & Inlets must be mounted to a DXN handle, angle or wall box

Receptacle (female)



Standard DXN30 lid opens to 120° and can be adjusted to 180°

Inlet (male)



North American cCSAus Configurations

VOLTAGE	POLARITY	PART # POLY	PART # POLY
120 V	1P+N+G	22-34165	22-38165
125 V	1P+N+G	22-34075	22-38075
208 V	2P+G	22-34162	22-38162
208 V	3P+G	22-34163	22-38163
208 V	3P+N+G	22-34167	22-38167
250 V	2P+G	22-34072	22-38072
250 V	3P+G	22-34073	22-38073
250 V	2P+N+G	22-34076	22-38076
277 V	1P+N+G	22-34045	22-38045
480 V	2P+G	22-34042	22-38042
480 V	3P+G	22-34043	22-38043
480 V	3P+N+G	22-34047	22-38047
600 V	2P+G	22-34142	22-38142
600 V	3P+G	22-34143	22-38143
600 V	3P+N+G	22-34147	22-38147

RECEPTACLE OPTIONS	SUFFIX #	INLET OPTIONS	SUFFIX #
With 2 Auxiliary/Pilot Contacts*	Recept # -972	With 2 Auxiliary/Pilot Contacts*	Inlet # -972
Padlock Pawl	Recept # -843	Without Lockout Hole	Inlet # -A155
Metal Pawl on Poly Receptacle	Recept # -924	* Not available with 600 V devices, use -972-S74 for 550 VAC.	
Self-Returning Lid (Manual Close)	Recept # -R		

ATEX/IECEx Certifications DXN3

- **Max Amperage & Voltage**
  32 A, 750 VAC, 50 Hz
- **Environmental** IP66/IP67
- **Ambient Temp** -40°C to +60°C
- **Hazardous Location Ratings**
  ATEX/IECEx Zones 1 & 2, 21 & 22

MARECHAL ELECTRIC MAROMME
Ex II2 G/D Ex de IIC T*Gb
Ex tb IIIC T*Db
-40 °C ≤ TA ≤ +60 °C T5 T77 °C
-40 °C ≤ TA ≤ +40 °C T6 T57 °C
IECEx LCI 09.0006X / LCIE 05 ATEX 6149

See International Catalog (online) for additional product information.

Receptacle **Inlet**

IEC/CE Configurations (ATEX/IECEx)

VOLTAGE	POLARITY	PART # POLY	PART # POLY
20 - 24 V	2P	253408A	253808A
190 - 230 V	3P+E	2534033	2538033
220 - 250 V	1P+N+E	2534015	2538015
380 - 440 V	3P+E	2534013	2538013
380 - 440 V	3P+N+E	2534017	2538017
480 - 500 V	3P+E	2534093	2538093
480 - 500 V	3P+N+E	2534097	2538097

RECEPTACLE OPTIONS	SUFFIX #	INLET OPTIONS	SUFFIX #
With 2 Auxiliary/Pilot Contacts*	Recept # + 972	With 2 Auxiliary/Pilot Contacts*	Inlet # + 972
Padlock Pawl w/shaft for 2 locks	Recept # + 843	* Not available with 600 V devices, use -972-S74 for 550 VAC	
Self-Returning Lid (Manual Close)	Recept # + R		

Handle Option Guide pgs 243-244

INSTALLATION ACCESSORIES – SIZE 2

When properly installed, all accessories meet or exceed the environmental ratings of the devices they are mounted to; unless otherwise noted.

HANDLES

POLY HANDLE WITH NPT	PART #	
	3/4"	22-3A013-34
	1"	22-3A013-1
	1 1/4"	22-3A013-114

For use in Class I or II Division 2 or Class 1 Zone 1 or Zone 21 depending on fitting used. Fitting manufactured by others.

POLY HANDLE WITH CORD GRIP WITH CABLE RANGE		
	.350-.630"	252P0CPD
	.510-.710"	252P0CPC
	.510-.790"	252P0DPF
	.710-.980"	252P0DPE

For use in Class I or II Division 2, Class I Zone I or Zone 21.

-20°C ≤ Ta ≤ +85°C

ANGLES

POLY ANGLE		
	30°	22-3A027

MISCELLANEOUS ACCESSORIES

FINGER DRAWPLATES		
	61-3A346	Set of Two (2) Recommended for all assembly applications, for facilitated mating.

PROTECTIVE INLET/PLUG CAP		
	22-3A426	For Inlets/Plugs Only.

RECEPTACLE LOCKING PIN		
	LP-843	Requires Padlockable Pawl option (-843) on receptacle.

BOXES

POLY WALL BOX WITH NPT			
 NPT * 5.4 in³	30°	3/4"	22-3A023-34-T

NPT Thread on top.
* Interior volume with receptacle installed.

POLY WALL BOX WITH NPT			
 NPT * 5.4 in³	30°	3/4"	22-3A023-34-B

NPT Thread on bottom
* Interior volume with receptacle installed.

POLY ANGLE WITH METAL BOX WITH NPT			
 * 74.6 in³	70°	1/2"	222C7N05
	70°	3/4"	222C7N07
	70°	1"	222C7N10
	70°	1 1/4"	222C7N12
	70°	1 1/2"	222C7N15

NPT is drilled on top of metal box as standard. To switch from top to bottom the box can be rotated.

* Interior volume with receptacle installed.

For other configurations, contact Customer Service.

POLY WALL BOX 120X120 WITHOUT TERMINAL BLOCKS WITH CORD GRIP			
 * 82.0 in³	70°	1/2"	.200-.350" 222C7BPJ
	70°	1/2"	.240-.470" 222C7BPA
	70°	1/2"	.390-.550" 222C7BPB
	70°	3/4"	.350-.630" 222C7CPD
	70°	3/4"	.510-.710" 222C7CPC
	70°	1"	.510-.790" 222C7DPF
	70°	1"	.710-.980" 222C7DPE

For use in Class I or II Division 2, Class I Zone I or Zone 21

1 hole with a poly cable gland.

! Accessories rated for hazardous locations are not returnable.

HAZARDOUS LOCATION

IEC/CE Accessories (ATEX/IECEx)

! IEC/CE accessories can only be used with IEC/CE devices.

HANDLES

POLY HANDLE WITH POLY CABLE GLAND	PART #	
	10-14 mm	253A753
	12-18 mm	253A783
	16-25 mm	253A25332P
	22-32 mm	253A25340P

For use in Zones 1 & 2 Zones 21 & 22

POLY HANDLE WITH METAL CABLE GLAND		
	8-10 mm	253A25320M
	12-14 mm	253A25325M
	18-24 mm	253A25332M

With Earth continuity

ANGLES

POLY ANGLE		
	30°	253A027
	70°	253A757

For panel mounting. Not a replacement part for 70° wall box.

BOXES

POLY WALL BOX			
	30°	10-14 mm	253AB53
	30°	12-18 mm	253AB5325P

POLY WALL BOX 120X120 WITHOUT TERMINAL BLOCKS			
	70°	10-14 mm	253AB8820P
	70°	12-18 mm	253AB8825P
	70°	16-25 mm	253AB8832P

1 hole with a poly cable gland.

POLY WALL BOX 120X120 WITH 10MM2 TERMINAL BLOCKS			
	70°	10-14 mm	253A08820P
	70°	12-18 mm	253A08825P

With 2 holes (1 with a cable gland + 1 with a stopping plug), with 8+2E 10 mm² terminals blocks + 6 mm² wires, wiring 2.5 - 10 mm². For loop in loop out wiring.

-40°C ≤ Ta ≤ +60°C T5 T77°C
-40°C ≤ Ta ≤ +40°C T6 T57°C

DXN60 Hazardous Location - 60 A

cCSAus Certifications DXN60

- **Max Amperage & Voltage**
  60 A, 600 VAC, 60 Hz
- **Current Interruption Capability**
  For current interrupting (AC)
- **Horsepower Ratings**

120 V	1Ø	2 hp
240 V	1Ø	3 hp
208 V	3Ø	7.5 hp
240 V	3Ø	7.5 hp
480 V	3Ø	20 hp
600 V	3Ø	20 hp

- **Short Circuit Rating**
  25 kA Close & Withstand
  Testing was performed with RK1 100 A fuse sized at 400% of the highest full load motor ampacity associated with the devices hp rating.
  Note: Consult NEC for Short Circuit limits.
- **Environmental Ratings**
  IP66/IP67
- **Wiring Capacity**
  * Based on THHN wire sizes.
  Min 10 AWG Max 4 AWG
  Aux Contacts: Max 10 AWG
- **Applicable Standards**
  CSA C22.2 No. 182.1
- **Hazardous Location Ratings**
  -40°C ≤Ta ≤+60°C
  Ex de IIC T4 Gb Ex tb IIIC T100°C Db
  Class I Zone1 AEx de IIC T4 Gb
  Zone 21 AEx tD T100°C Db
  Class I Div 2 Gr A,B,C,D
  Class II Div 2 Gr E,F,G
  cCSAus 00.1144106X

Devices rated for hazardous locations are not returnable.

! Receptacles & Inlets must be mounted to a DXN handle, angle or wall box

Receptacle (female)



Standard DXN60 lid opens to 120° and can be adjusted to 180°

Inlet (male)



North American cCSAus Configurations

VOLTAGE	POLARITY	PART # POLY	PART # POLY
120 V	1P+N+G	22-64165	22-68165
125 V	1P+N+G	22-64075	22-68075
208 V	2P+G	22-64162	22-68162
208 V	3P+G	22-64163	22-68163
208 V	3P+N+G	22-64167	22-68167
250 V	2P+G	22-64072	22-68072
250 V	3P+G	22-64073	22-68073
250 V	2P+N+G	22-64076	22-68076
277 V	1P+N+G	22-64045	22-68045
480 V	2P+G	22-64042	22-68042
480 V	3P+G	22-64043	22-68043
480 V	3P+N+G	22-64047	22-68047
600 V	2P+G	22-64142	22-68142
600 V	3P+G	22-64143	22-68143
600 V	3P+N+G	22-64147	22-68147

RECEPTACLE OPTIONS	SUFFIX #	INLET OPTIONS	SUFFIX #
With 2 Auxiliary/Pilot Contacts*	Recept # -972	With 2 Auxiliary/Pilot Contacts*	Inlet # -972
Padlock Pawl	Recept # -843	Without Lockout Hole	Inlet # -A155
Metal Pawl on Poly Receptacle	Recept # -924	* Not available with 600V devices, use -972-S74 for 550 VAC	
Self-Returning Lid (Manual Close)	Recept # -R		

ATEX/IECEx Certifications DXN6

- **Max Amperage & Voltage**
  63 A, 750 VAC, 50 Hz
- **Environmental** IP66/IP67
- **Ambient Temp** -40°C to +60°C
- **Hazardous Location Ratings**
  ATEX/IECEx Zones 1 & 2, 21 & 22

MARECHAL ELECTRIC MAROMME
Ex II2 G/D Ex de IIC T*Gb
Ex tb IIIC T*Db
-40 °C ≤ TA ≤ +60 °C T4 T107 °C
-40 °C ≤ TA ≤ +40 °C T5 T87 °C
IECEx LCI 09.0007 / LCIE 05 ATEX 6150

See International Catalog (online) for additional product information.

Receptacle **Inlet**

IEC/CE Configurations (ATEX/IECEx)

VOLTAGE	POLARITY	PART # POLY	PART # POLY
20 - 24 V	2P	256408A	256808A
190 - 230 V	3P+E	2564033	2568033
220 - 250 V	1P+N+E	2564015	2568015
380 - 440 V	3P+E	2564013	2568013
380 - 440 V	3P+N+E	2564017	2568017
480 - 500 V	3P+E	2564093	2568093
480 - 500 V	3P+N+E	2564097	2568097

Receptacle Options	Suffix #	Inlet Options	Suffix #
With 2 Auxiliary/Pilot Contacts*	Recept # + 972	With 2 Auxiliary/Pilot Contacts*	Inlet # + 972
Padlock Pawl w/shaft for 2 locks	Recept # + 843	* Not available with 600V devices, use -972-S74 for 550 VAC	
Self-Returning Lid (Manual Close)	Recept # + R		

Handle Option Guide pgs 243-244

INSTALLATION ACCESSORIES – SIZE 3

When properly installed, all accessories meet or exceed the environmental ratings of the devices they are mounted to; unless otherwise noted.

HANDLES

POLY HANDLE WITH NPT		PART #	
	1"	22-6A013-1	For use in Class I or II Division 2 or Class 1 Zone 1 or Zone 21 depending on fitting used. Fitting manufactured by others.

POLY HANDLE WITH CORD GRIP WITH CABLE RANGE			
	.510-.790"	253P0DPF	For use in Class I or II Division 2, Class I Zone I or Zone 21.
	.710-.980"	253P0DPE	
			-20°C ≤ Ta ≤ +85°C

ANGLES

POLY ANGLE			
	30°	22-6A027	

MISCELLANEOUS ACCESSORIES

FINGER DRAWPLATES		
	61-6A346	Set of Two (2) Recommended for all assembly applications, for facilitated mating.

PROTECTIVE INLET/PLUG CAP		
	22-6A426	For Inlets/Plugs Only.

RECEPTACLE LOCKING PIN		
	LP-843	Requires Padlockable Pawl option (-843) on receptacle.

BOXES

POLY WALL BOX WITH NPT				
 NPT * 11.1 in³	30°	1"	22-6A023-1-T	NPT Thread on top. * Interior volume with receptacle installed.

POLY WALL BOX WITH NPT				
 NPT *11.1 in³	30°	1"	22-6A023-1-B	NPT Thread on bottom. * Interior volume with receptacle installed.

POLY ANGLE WITH METAL BOX WITH NPT			
 * 177.7 in³	70°	1/2"	223C7N05
	70°	3/4"	223C7N07
	70°	1"	223C7N10
	70°	1 1/4"	223C7N12
	70°	1 1/2"	223C7N15

NPT is drilled on top of metal box as standard. To switch from top to bottom the box can be rotated.

* Interior volume with receptacle installed.

For other configurations, contact Customer Service.

POLY WALL BOX 160X160 WITHOUT TERMINAL BLOCKS WITH CORD GRIP				
 * 179.4 in³	70°	3/4"	.350-.630"	223C7CPD
	70°	3/4"	.510-.710"	223C7CPC
	70°	1"	.510-.790"	223C7DPF
	70°	1"	.710-.980"	223C7DPE
	70°	1 1/2"	.790-1.020"	223C7M40PG
	70°	1 1/2"	.870-1.260"	223C7M40PH

For use in Class I or II Division 2, Class I Zone I or Zone 21

1 hole with a poly cable gland.

! Accessories rated for hazardous locations are not returnable.

HAZARDOUS LOCATION

IEC/CE Accessories (ATEX/IECEx)

! IEC/CE accessories can only be used with IEC/CE devices.

HANDLES

POLY HANDLE WITH POLY CABLE GLAND		PART #	
	10-14 mm	256A25320P	For use in Zones 1 & 2 Zones 21 & 22.
	12-18 mm	256A753	
	16-25 mm	256A25332P	
	22-32 mm	256A25340P	

POLY HANDLE WITH METAL CABLE GLAND		
	8-10 mm	256A25320M
	12-14 mm	256A25325M
	18-24 mm	256A25332M

With Earth continuity.

ANGLES

POLY ANGLE			
	30°	256A027	
	70°	256A757	For panel mounting. Not a replacement part for 70° wall box.

BOXES

POLY WALL BOX			
	30°	12-18 mm	256AB53

POLY WALL BOX 160X160 WITHOUT TERMINAL BLOCKS			
	70°	10-14 mm	256AB8820P
	70°	12-18 mm	256AB8825P
	70°	16-25 mm	256AB8832P
	70°	22-32 mm	256AB8840P

1 hole with a poly cable gland.

POLY WALL BOX 160X160 WITH 16MM2 TERMINAL BLOCKS			
	70°	10-14 mm	256A08820P
	70°	12-18 mm	256A08825P
	70°	16-25 mm	256A08832P
	70°	22-32 mm	256A08840P

With 2 holes (1 with a cable gland + 1 with a stopping plug), with 8 + 2E 16 mm² terminal blocks + 16 mm² wires, wiring 6 - 16 mm² for loop in loop out wiring

-40°C ≤ Ta ≤ +55°C T4 T105°C

-40°C ≤ Ta ≤ +50°C T5 T95°C

DXN DIMENSIONS – Provided in Inches

SCAN ME >>

Dimensions are for reference only and may change depending on accessories used. For precise dimensions contact MELTRIC Engineering.

Plug

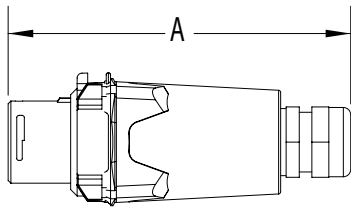

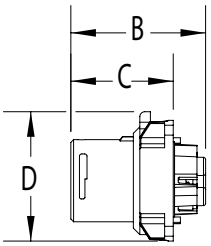

Inlet

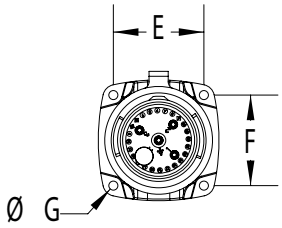

PRODUCT	A	B	C	D	E	F	øG
DXN20	6.36	2.57	1.86	2.40	1.65	1.65	0.18
DXN30	6.47	3.03	1.97	2.83	1.89	1.89	0.19
DXN60	9.67	3.94	2.19	3.02	2.19	2.19	0.20

Connector

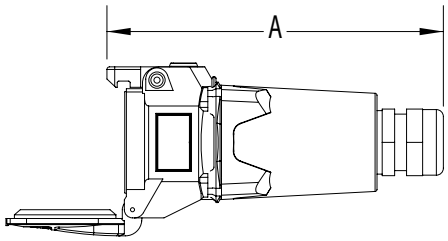

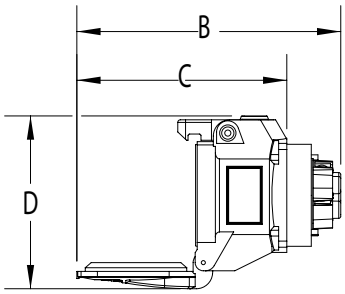

Receptacle

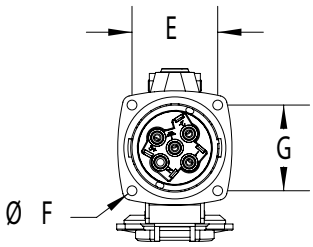

PRODUCT	A	B	C	D	E	øF	G
DXN20	6.22	4.77	4.09	5.28	1.65	0.18	1.65
DXN30	7.17	5.49	4.29	7.05	1.89	0.20	1.89
DXN60	8.31	7.18	5.91	7.68	2.19	0.20	2.19

30° Angle/Receptacle/Plug

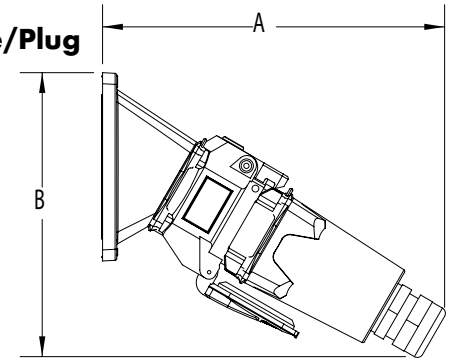

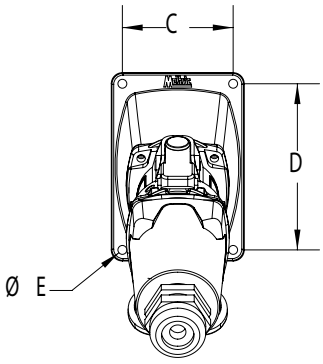

PRODUCT	A	B	C	D	øE
DXN20	7.52	5.91	2.50	3.75	0.20
DXN30	8.07	6.57	2.50	3.75	0.20
DXN60	9.41	7.48	2.50	3.75	0.20

70° Wall Box/Receptacle/Plug

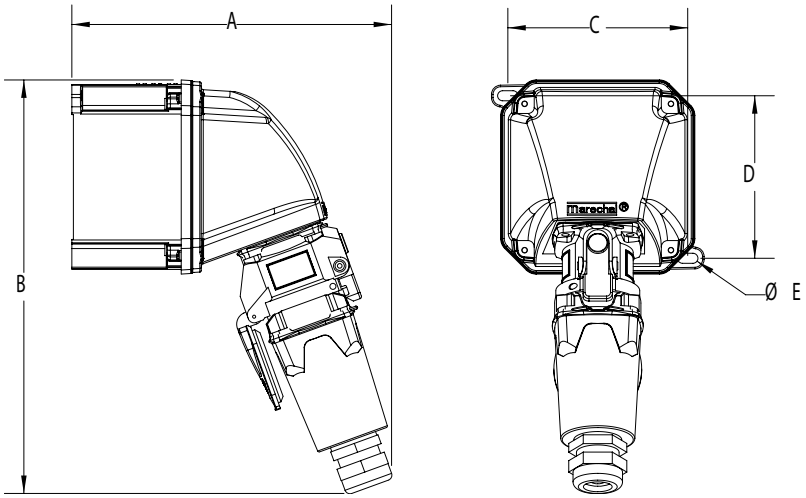

PRODUCT	A	B	C	D	øE
DXN20	8.17	10.57	4.60	4.15	0.26
DXN30	9.25	12.62	4.60	4.15	0.26
DXN60	11.88	13.39	6.17	5.73	0.26

Connector/Plug

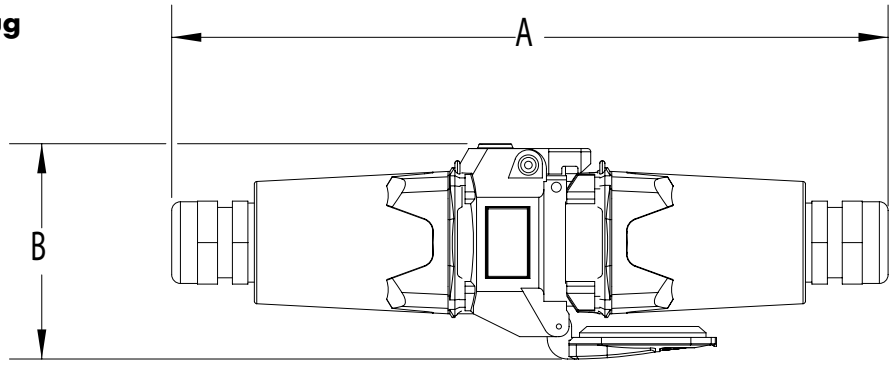

PRODUCT	A	B
DXN20	11.10	3.33
DXN30	12.59	4.08
DXN60	13.95	4.65

DXA1
Hazardous Location



Main Advantages

- CSA and ATEX hazardous listings
- Robust metal casings withstand harsh environments
- Spring-loaded, butt-style contacts provide superior performance
- Dual pawls with locking feature for secure connections

- Features and Ratings p. 172
- DXA1 20 A p. 173

SCAN ME >>

PRODUCT FEATURES



IP66/IP67 Watertightness

Environmental rating is achieved as soon as the plug is latched to the receptacle. There is no additional ring to tighten.

Locking Provision

For insertion of locking pin (or padlock) to prevent inadvertent disconnection (Standard).

Metal Casing

Provides excellent durability and protection.

Lid

Provides additional protection from harsh environments.

Silver-Nickel Contacts

Silver-nickel contact material provides superior conductivity, durability and corrosion resistance.

Spring-Loaded Butt-Style Contacts

Ensures optimal contact force and superior electrical performance over thousands of operations.

Hazardous Location Listings (CSA or ATEX)

CSA	ATEX
Ex de IIC T*Gb	II 2 G D Ex de IIC T*Gb Ex tb IIIC T* Db
Ex tb IIIC T*Db	-55°C ←Ta← 40°C T6 T68°C
Class I Zone I AEx de IIC T*Gb	-55°C ←Ta← 60°C T5 T88 °C
Zone 21 AEx tD T*Db	LCIE 15 ATEX 3033 / IECEx LCIE 15.0030
Class I Division 2 Gr A,B,C,D	
Class II Division 2 Gr E,F,G	
-55°C ←Ta← 40°C T6 T68°C	
-55°C ←Ta← 60°C T5 T88 °C	



NOM listing available. Contact MELTRIC Engineering for more information.

The DXA1 product line is similar to the DXN, but uses a larger casing made of aluminum and equipped with dual pawls for use in more abusive and colder environments.

DXA1 Hazardous Location - 20 A

Certifications

- **Max Amperage & Voltage**
  20 A, 600 VAC, 60 Hz
- **Current Interruption Capacity**
  For current interrupting (AC)
- **Horsepower Ratings**

120 V	1Ø	.75 hp
240 V	1Ø	2 hp
208 V	3Ø	3 hp
240 V	3Ø	3 hp
480 V	3Ø	10 hp
600 V	3Ø	10 hp

- **Short Circuit Rating**
  25 kA Close & Withstand
  Testing was performed with RK1 30 A fuse sized at 400% of the highest full load motor ampacity associated with the devices hp rating.
  Note: Consult NEC for Short Circuit limits.
- **Environmental Ratings**
  IP66/IP67
- **Temperature Range**
  Min -67°F / Max 140°F
  See pg 260 for temperatures outside this range.
- **Wiring Capacity**
  Based on THHN wire sizes.
  Min 16 AWG Max 10 AWG
- **Applicable Standards**
  CSA C22.2 No. 182.1
- **Hazardous Location Ratings**
  -55°C ≤Ta ≤+60°C
  Ex de IIC T5 Gb Ex tb IIIC T88°C Db
  Class I Zone1 AEx de IIC T5 Gb
  Zone 21 AEx tD T88°C Db
  Class I Div 2 Gr A,B,C,D
  Class II Div 2 Gr E,F,G
  cCSAus 00.114406X

(Suffix #)	Threaded
-34	3/4"

Note: Connector and Plug come standard with ½"

Devices rated for hazardous locations are not returnable.

Receptacle (female)



or

Inlet (male)



North American Configurations

VOLTAGE	POLARITY	PART # METAL	PART # METAL
120 V	1P+N+G	28-A4165	28-A8165
125 V	1P+N+G	28-A4075	28-A8075
208 V	2P+G	28-A4162	28-A8162
208 V	3P+G	28-A4163	28-A8163
208 V	3P+N+G	28-A4167	28-A8167
250 V	2P+G	28-A4072	28-A8072
250 V	3P+G	28-A4073	28-A8073
250 V	2P+N+G	28-A4076	28-A8076
277 V	1P+N+G	28-A4045	28-A8045
480 V	2P+G	28-A4042	28-A8042
480 V	3P+G	28-A4043	28-A8043
480 V	3P+N+G	28-A4047	28-A8047
600 V	2P+G	28-A4142	28-A8142
600 V	3P+G	28-A4143	28-A8143
600 V	3P+N+G	28-A4147	28-A8147

For international configurations (ATEX/IECEx) visit meltric.com/international-catalog or contact Customer Service at 800-433-7642.

Connector (female)



or

Plug (male)



North American Configurations

VOLTAGE	POLARITY	PART # METAL	PART # METAL
120 V	1P+N+G	28-A3165	28-A1165
125 V	1P+N+G	28-A3075	28-A1075
208 V	2P+G	28-A3162	28-A1162
208 V	3P+G	28-A3163	28-A1163
208 V	3P+N+G	28-A3167	28-A1167
250 V	2P+G	28-A3072	28-A1072
250 V	3P+G	28-A3073	28-A1073
250 V	2P+N+G	28-A3076	28-A1076
277 V	1P+N+G	28-A3045	28-A1045
480 V	2P+G	28-A3042	28-A1042
480 V	3P+G	28-A3043	28-A1043
480 V	3P+N+G	28-A3047	28-A1047
600 V	2P+G	28-A3142	28-A1142
600 V	3P+G	28-A3143	28-A1143
600 V	3P+N+G	28-A3147	28-A1147

Cord grip not included. Sizes are determined by the cable diameter. Select hazardous cord grip from Cord Grip section, pg 232.

For international configurations (ATEX/IECEx) visit meltric.com/international-catalog or contact Customer Service at 800-433-7642.

Receptacle/30° Angle (female)



or

Inlet/30° Angle (male)



North American Configurations

VOLTAGE	POLARITY	PART # METAL	PART # METAL
120 V	1P+N+G	28-A7165	28-A9165
125 V	1P+N+G	28-A7075	28-A9075
208 V	2P+G	28-A7162	28-A9162
208 V	3P+G	28-A7163	28-A9163
208 V	3P+N+G	28-A7167	28-A9167
250 V	2P+G	28-A7072	28-A9072
250 V	3P+G	28-A7073	28-A9073
250 V	2P+N+G	28-A7076	28-A9076
277 V	1P+N+G	28-A7045	28-A9045
480 V	2P+G	28-A7042	28-A9042
480 V	3P+G	28-A7043	28-A9043
480 V	3P+N+G	28-A7047	28-A9047
600 V	2P+G	28-A7142	28-A9142
600 V	3P+G	28-A7143	28-A9143
600 V	3P+N+G	28-A7147	28-A9147

For international configurations (ATEX/IECEx) visit meltric.com/international-catalog or contact Customer Service at 800-433-7642.

Accessories & Options



Inlet Cap

Part # 28-1A426



Receptacle Lockout Pin

Part # LP-843



Finger Drawplates

Part # 28-1A346

Receptacle/Wall Box (female)



or

Inlet/Wall Box (male)



North American Configurations

VOLTAGE	POLARITY	PART # METAL	PART # METAL
120 V	1P+N+G	28-A0165	28-A6165
125 V	1P+N+G	28-A0075	28-A6075
208 V	2P+G	28-A0162	28-A6162
208 V	3P+G	28-A0163	28-A6163
208 V	3P+N+G	28-A0167	28-A6167
250 V	2P+G	28-A0072	28-A6072
250 V	3P+G	28-A0073	28-A6073
250 V	2P+N+G	28-A0076	28-A6076
277 V	1P+N+G	28-A0045	28-A6045
480 V	2P+G	28-A0042	28-A6042
480 V	3P+G	28-A0043	28-A6043
480 V	3P+N+G	28-A0047	28-A6047
600 V	2P+G	28-A0142	28-A6142
600 V	3P+G	28-A0143	28-A6143
600 V	3P+N+G	28-A0147	28-A6147

For international configurations (ATEX/IECEx) visit meltric.com/international-catalog or contact Customer Service at 800-433-7642.

(SUFFIX #)	THREADED LOCATION	
12T	1/2"	Top
34T	3/4"	Top
34B	3/4"	Bottom

Note: Receptacle/Wall Box & Inlet/Wall Box come standard with ½" on bottom

SCAN ME >>

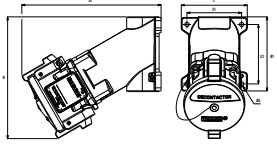

Contact MELTRIC Engineering for DXA1 dimensions.

ZONE 2
Hazardous Location





Main Advantages

- Featuring silver nickel, butt-style contacts for maximum performance and durability
- Available in in-line and wall/ panel mounted configurations
- Ideal for motor connections up to 100 hp

- Features and Ratings p. 176
- DS p. 177
- DSN p. 185
- DR p. 189
- DSDC p. 195

SCAN ME >>

WATCH ME >>

PRODUCT FEATURES



Locking Pawl

Class I Division 2 and Class I Zone 2 hazardous location ratings are based on using the pawl to lock devices in the mated position so that all sources of power to the device can be turned off before the device can be disconnected.

Spring-Loaded Butt-Style Contacts

Ensures optimal contact force and superior electrical performance.



Silver-Nickel Contacts

Silver-nickel contact material provides superior conductivity, durability and corrosion resistance.

Lid

When closed, the lid maintains Type 4X protection for the receptacle after removal of the plug.

General Ratings

Amperage	20 to 250 A
Voltage	600 VAC, 250 VDC Max
Frequency	60 Hz
Horsepower	.75 to 100 hp
Environmental	Type 4X
Temperature	min -40°F/max 104°F

Hazardous Location Listings

CSA
Class I Division 2 Gr A,B,C,D, T6
Class I Zone 2, IIC

Plug & Receptacles Listings (CSA)

CATEGORY	CSA
Plugs and Receptacles	C22.2 No. 182.1-07
Electrical Equipment for Class I, Div 2 Locations	C22.2 No. 213-M1987

NOM listing available. Contact MELTRIC Engineering for more information.

Highlighted Feature

Meltric DS60
60 A, 480 VAC
20hp, TYPE 4X
1002001
36-64043
RECEPTACLE/CONNECTOR
Class I, Division 2, Groups ABCD, T6
Class I, Zone 2, IIC

DSN and DS plugs and receptacles are CSA horsepower rated for motor connections in hazardous locations. Not to be operated while energized.

Operating Instructions



Before connection, ensure that the circuit is de-energized. Align the red dots, push the plug partially in, then turn clockwise slightly to line up the latch with the catch.



Push the plug fully home until it is held in place by the latch. The circuit is now closed.



Listing Requirement: Tighten screw to lock the plug in the mated position.



Optional: Insert a 5/16" lock or locking pin to prevent disconnection or to lock the receptacle lid closed.

DS20 Hazardous Location - 20 A

Ratings

- **Max Amperage & Voltage**
  20 A, 600 VAC
- **Current Interruption Capability**
  Not for current interrupting
- **Horsepower Ratings**

120 V	1Ø	.75 hp
208 V	3Ø	3 hp
240 V	3Ø	5 hp
480 V	3Ø	7.5 hp
600 V	3Ø	10 hp

- **Short Circuit Rating**
  100 kA Withstand
  Testing was performed with 80 A RK1 fast-acting Mersen fuses.
- **Environmental Ratings**
  Type 4X
- **Temperature Range**
  Min -40°F/Max 104°F
  See pg 260 for temperatures outside this range.
- **Wiring Capacity**
  * Based on THHN wire sizes.
  Min 14 AWG Max 8 AWG
  Aux Contacts: Max 14 AWG
- **Applicable Standards**
  CSA C22.2 No. 182.1-07
  C22.2 No. 213-M1987
- **Hazardous Ratings**
  Class I, Division 2, Groups ABCD, T6
  Class I, Zone 2, IIC

Devices rated for hazardous locations are not returnable.

! Don't forget to add installation accessories to your order

Receptacle (female)



Inlet (male)



Hazardous Location DS20 lid is Self-Returning

VOLTAGE	POLARITY	PART # POLY	PART # POLY
120 V	1P+N+G	35-14165-HAZ	35-18165-HAZ
120 208 V	3P+N+G	35-14167-HAZ	35-18167-HAZ
125 V	1P+N+G	35-14075-HAZ	35-18075-HAZ
125 250 V	2P+N+G	35-14076-HAZ	35-18076-HAZ
208 V	2P+G	35-14162-HAZ	35-18162-HAZ
208 V	3P+G	35-14163-HAZ	35-18163-HAZ
250 V	2P+G	35-14072-HAZ	35-18072-HAZ
250 V	3P+G	35-14073-HAZ	35-18073-HAZ
277 V	1P+N+G	35-14045-HAZ	35-18045-HAZ
277 480 V	3P+N+G	35-14047-HAZ	35-18047-HAZ
347 600 V	3P+N+G	35-14147-HAZ	35-18147-HAZ
480 V	2P+G	35-14042-HAZ	35-18042-HAZ
480 V	3P+G	35-14043-HAZ	35-18043-HAZ
600 V	2P+G	35-14142-HAZ	35-18142-HAZ
600 V	3P+G	35-14143-HAZ	35-18143-HAZ

35-14165-HAZ

Part Number Example

480 V DS20 + 2 aux contacts

DS20 recept 3P+G = 35-14043-***972***-HAZ

480 V DS20 with no options

DS20 recept 3P+G = 35-14043-HAZ

RECEPTACLE OPTIONS	SUFFIX #	INLET OPTIONS	SUFFIX #
With 2 Auxiliary/Pilot Contacts	**Recept # -972**	With 2 Auxiliary/Pilot Contacts	**Inlet # -972**
Normally Open Lid Configuration	**Recept # -NO**	Without Lockout Hole	**Inlet # -A155**

! See pages 237-246 for detailed information on these options

Feature Spotlight – Screw-Type Locking Pawl

Listing Requirement
Users must tighten screw to lock the plug in the mated position



5/16" hole for added security

Zone 2/Division 2 DS20 receptacles feature a standard screw-type locking pawl. This required feature allows the user to lock the plug to the receptacle by tightening a screw on the pawl.

For added security, a lockout hole is included on the receptacle that enables the user to insert a 5/16" lock or locking pin to prevent the plug from being disconnected or to lock the receptacle lid closed.

Handle Option Guide pgs 243-244

INSTALLATION ACCESSORIES – SIZE 2

When properly installed, all accessories meet or exceed the environmental ratings of the devices they are mounted to; unless otherwise noted.

HANDLES

HANDLE WITH NPT		PART # POLY	PART # METAL
 Poly	1/2"	552P0N05	5K2P0N05
	3/4"	552P0N07	5K2P0N07
 Metal	1"	552P0N10	5K2P0N10
	1 1/4"	552P0N12	–

For available cord grips, see pg 232.

POLY HANDLE WITH CABLE RANGE		
	.196-.826"	552P0D21

BOXES

POLY ANGLE WITH METAL BOX WITH NPT				
 * 28.7 in^3	30°	1/2"	752C3N05	* Interior volume with receptacle installed.
	30°	3/4"	752C3N07	
	30°	1"	752C3N10	
	30°	1 1/4"	752C3N12	

METAL ANGLE WITH METAL BOX WITH NPT				
 * 28.7 in^3	30°	1/2"	7K2C3N05	* Interior volume with receptacle installed.
	30°	3/4"	7K2C3N07	
	30°	1"	7K2C3N10	
	30°	1 1/4"	7K2C3N12	

POLY ANGLE WITH LARGER METAL BOX WITH NPT				
 * 74.6 in^3	70°	1/2"	752C7N05	* Interior volume with receptacle installed.
	70°	3/4"	752C7N07	
	70°	1"	752C7N10	
	70°	1 1/4"	752C7N12	
	70°	1 1/2"	752C7N15	

NPT on top or bottom (if rotated). For other configurations, contact Customer Service.

ANGLES

POLY ANGLE		
	30°	552M3

METAL ANGLE		
	0°	5K2M0
	30°	5K2M3

MISCELLANEOUS ACCESSORIES

FINGER DRAWPLATES		
	61-3A346	Set of Two (2) Recommended for all assembly applications, for facilitated mating.

PROTECTIVE INLET/PLUG CAP		
	31-1A426	For Inlets/Plugs Only.

RECEPTACLE LOCKING PIN	
	LP-843

SCAN ME >>

Notes: For Zone 2 DS dimensions refer to DS dimensions on pgs 55-56.

! Accessories rated for hazardous locations are not returnable.

HAZARDOUS LOCATION

DS30 Hazardous Location - 30 A

Ratings

- **Max Amperage & Voltage**
  30 A, 600 VAC
- **Current Interruption Capability**
  Not for current interrupting
- **Horsepower Ratings**

120 V	1Ø	1.5 hp
240 V	1Ø	3 hp
208 V	3Ø	5 hp
240 V	3Ø	5 hp
480 V	3Ø	15 hp
600 V	3Ø	15 hp

- **Short Circuit Rating**
  100 kA Withstand
  Testing was performed with 125 A RK1 fast-acting Mersen fuses
- **Environmental Ratings**
  Type 4X
- **Temperature Range**
  Min -40°F/Max 104°F
  See pg 260 for temperatures outside this range.
- **Wiring Capacity**
  Based on THHN wire sizes.
  Min 14 AWG Max 4 AWG
  Aux Contacts: Max 14 AWG
- **Applicable Standards**
  CSA C22.2 No. 182.1-07
  C22.2 No. 213-M1987
- **Hazardous Ratings**
  Class I, Division 2, Groups ABCD, T6
  Class I, Zone 2, IIC

Devices rated for hazardous locations are not returnable.

! Don't forget to add installation accessories to your order

Receptacle (female)



Inlet (male)



Hazardous Location DS30 lid is Self-Returning

VOLTAGE	POLARITY	PART # POLY	PART # POLY
120 V	1P+N+G	35-34165-HAZ	35-38165-HAZ
120 208 V	3P+N+G	35-34167-HAZ	35-38167-HAZ
125 V	1P+N+G	35-34075-HAZ	35-38075-HAZ
125 250 V	2P+N+G	35-34076-HAZ	35-38076-HAZ
208 V	2P+G	35-34162-HAZ	35-38162-HAZ
208 V	3P+G	35-34163-HAZ	35-38163-HAZ
250 V	2P+G	35-34072-HAZ	35-38072-HAZ
250 V	3P+G	35-34073-HAZ	35-38073-HAZ
277 V	1P+N+G	35-34045-HAZ	35-38045-HAZ
277 480 V	3P+N+G	35-34047-HAZ	35-38047-HAZ
347 600 V	3P+N+G	35-34147-HAZ	35-38147-HAZ
480 V	2P+G	35-34042-HAZ	35-38042-HAZ
480 V	3P+G	35-34043-HAZ	35-38043-HAZ
600 V	2P+G	35-34142-HAZ	35-38142-HAZ
600 V	3P+G	35-34143-HAZ	35-38143-HAZ

Part Number Example

480 V DS30 + 2 aux contacts

DS30 recept 3P+G = 35-34043-***972***-HAZ

480 V DS30 with no options

DS30 recept 3P+G = 35-34043-HAZ

RECEPTACLE OPTIONS	SUFFIX #	INLET OPTIONS	SUFFIX #
With 2 Auxiliary/Pilot Contacts	**Recept # -972**	With 2 Auxiliary/Pilot Contacts	**Inlet # -972**
With 3 Auxiliary/Pilot Contacts	**Recept # -973**	With 3 Auxiliary/Pilot Contacts	**Inlet # -973**
With 4 Auxiliary/Pilot Contacts	**Recept # -974**	With 4 Auxiliary/Pilot Contacts	**Inlet # -974**
Normally Open Lid Configuration	**Recept # -NO**	Without Lockout Hole	**Inlet # -A155**

Feature Spotlight – Screw-Type Locking Pawl

Listing Requirement
Users must tighten screw to lock the plug in the mated position



5/16" hole for added security

Zone 2/Division 2 DS30 receptacles feature a standard screw-type locking pawl. This required feature allows the user to lock the plug to the receptacle by tightening a screw on the pawl.

For added security, a lockout hole is included on the receptacle that enables the user to insert a 5/16" lock or locking pin to prevent the plug from being disconnected or to lock the receptacle lid closed.

! See pages 237-246 for detailed information on these options

Handle Option Guide pgs 243-244

INSTALLATION ACCESSORIES – SIZE 3

When properly installed, all accessories meet or exceed the environmental ratings of the devices they are mounted to; unless otherwise noted.

HANDLES

HANDLE WITH NPT		PART # POLY	PART # METAL
 Poly	1/2"	553P0N05	5K3P0N05
	3/4"	553P0N07	5K3P0N07
 Metal	1"	553P0N10	5K3P0N10
	1 1/4"	553P0N12	5K3P0N12

For available cord grips, see pg 232.

POLY HANDLE WITH CABLE RANGE		
	.390-1.180"	553P0D30

BOXES

POLY ANGLE WITH METAL BOX WITH NPT				
 * 29.6 in³	30°	1/2"	753C3N05	* Interior volume with receptacle installed.
	30°	3/4"	753C3N07	
	30°	1"	753C3N10	
	30°	1 1/4"	753C3N12	

METAL ANGLE WITH METAL BOX WITH NPT				
 * 29.6 in³	30°	1/2"	7K3C3N05	* Interior volume with receptacle installed.
	30°	3/4"	7K3C3N07	
	30°	1"	7K3C3N10	
	30°	1 1/4"	7K3C3N12	

POLY ANGLE WITH LARGER METAL BOX WITH NPT				
 * 177.7 in³	70°	1/2"	753C7N05	* Interior volume with receptacle installed.
	70°	3/4"	753C7N07	
	70°	1"	753C7N10	
	70°	1 1/4"	753C7N12	
	70°	1 1/2"	753C7N15	

METAL ANGLE WITH METAL BOX WITH NPT				
 * 27.7 in³	70°	1/2"	7K3C7N05	* Interior volume with receptacle installed.
	70°	3/4"	7K3C7N07	
	70°	1"	7K3C7N10	
	70°	1 1/4"	7K3C7N12	

NPT on top or bottom (if rotated). For other configurations, contact Customer Service.

ANGLES

POLY ANGLE		
	30°	553M3

METAL ANGLE		
	0°	5K3M0
	30°	5K3M3
	70°	5K3M7

MISCELLANEOUS ACCESSORIES

FINGER DRAWPLATES		
	61-6A346	Set of Two (2) Recommended for all assembly applications, for facilitated mating.

PROTECTIVE INLET/PLUG CAP		
	31-3A426	For Inlets/Plugs Only.

RECEPTACLE LOCKING PIN	
	LP-843

SCAN ME >>

Notes: For Zone 2 DS dimensions refer to DS dimensions on pgs 55-56.

! Accessories rated for hazardous locations are not returnable.

HAZARDOUS LOCATION

DS60 Hazardous Location - 60 A

Ratings

- **Max Amperage & Voltage**
  60 A, 600 VAC
- **Current Interruption Capability**
  Not for current interrupting
- **Horsepower Ratings**

120 V	1Ø	3 hp
240 V	1Ø	5 hp
208 V	3Ø	10 hp
240 V	3Ø	10 hp
480 V	3Ø	25 hp
600 V	3Ø	25 hp

- **Short Circuit Rating**
  100 kA Withstand
  Testing was performed with 250 A RK1 fast-acting Mersen fuses..
- **Environmental Ratings**
  Type 4X
- **Temperature Range**
  Min -40°F/Max 104°F
  See pg 260 for temperatures outside this range.
- **Wiring Capacity**
  Based on THHN wire sizes.
  Min 10 AWG Max 2 AWG
  Aux Contacts: Max 14 AWG
- **Applicable Standards**
  CSA C22.2 No. 182.1-07
  C22.2 No. 213-M1987
- **Hazardous Ratings**
  Class I, Division 2, Groups ABCD, T6
  Class I, Zone 2, IIC

Devices rated for hazardous locations are not returnable.

! Don't forget to add installation accessories to your order

Receptacle (female)



Inlet (male)



VOLTAGE	POLARITY	PART # METAL	PART # METAL
120 V	1P+N+G	36-64165-HAZ	36-68165-HAZ
120 208 V	3P+N+G	36-64167-HAZ	36-68167-HAZ
125 V	1P+N+G	36-64075-HAZ	36-68075-HAZ
125 250 V	2P+N+G	36-64076-HAZ	36-68076-HAZ
208 V	2P+G	36-64162-HAZ	36-68162-HAZ
208 V	3P+G	36-64163-HAZ	36-68163-HAZ
250 V	2P+G	36-64072-HAZ	36-68072-HAZ
250 V	3P+G	36-64073-HAZ	36-68073-HAZ
277 V	1P+N+G	36-64045-HAZ	36-68045-HAZ
277 480 V	3P+N+G	36-64047-HAZ	36-68047-HAZ
347 600 V	3P+N+G	36-64147-HAZ	36-68147-HAZ
480 V	2P+G	36-64042-HAZ	36-68042-HAZ
480 V	3P+G	36-64043-HAZ	36-68043-HAZ
600 V	2P+G	36-64142-HAZ	36-68142-HAZ
600 V	3P+G	36-64143-HAZ	36-68143-HAZ

Part Number Example

480 V DS60 + 2 aux contacts

DS60 recept 3P+G = 36-64043-***972***-HAZ

480 V DS60 with no options

DS60 recept 3P+G = 36-64043-HAZ

RECEPTACLE OPTIONS	SUFFIX #	INLET OPTIONS	SUFFIX #
With 2 Auxiliary/Pilot Contacts	**Recept # -972**	With 2 Auxiliary/Pilot Contacts	**Inlet # -972**
With 3 Auxiliary/Pilot Contacts	**Recept # -263**	With 3 Auxiliary/Pilot Contacts	**Inlet # -263**
With 4 Auxiliary/Pilot Contacts	**Recept # -264**	With 4 Auxiliary/Pilot Contacts	**Inlet # -264**
Normally Open Lid Configuration	**Recept # -NO**	Without Lockout Hole	**Inlet # -A155**

Feature Spotlight – Screw-Type Locking Pawl

Listing Requirement
Users must tighten screw to lock the plug in the mated position



5/16" hole for added security

Zone 2/Division 2 DS60 receptacles feature a standard screw-type locking pawl. This required feature allows the user to lock the plug to the receptacle by tightening a screw on the pawl.

For added security, a lockout hole is included on the receptacle that enables the user to insert a 5/16" lock or locking pin to prevent the plug from being disconnected or to lock the receptacle lid closed.

! See pages 237-246 for detailed information on these options

Handle Option Guide pgs 243-244

INSTALLATION ACCESSORIES – SIZE 4

When properly installed, all accessories meet or exceed the environmental ratings of the devices they are mounted to; unless otherwise noted.

HANDLES

HANDLE WITH NPT		PART # POLY	PART # METAL
 Poly	1/2"	554P0N05	5K4P0N05
	3/4"	554P0N07	5K4P0N07
	1"	554P0N10	5K4P0N10
 Metal	1 1/4"	554P0N12	5K4P0N12
	1 1/2"	554P0N15	5K4P0N15

For available cord grips, see pg 232.

POLY HANDLE WITH CABLE RANGE		
	.511-1.377"	554P0D35

BOXES

POLY ANGLE WITH METAL BOX WITH NPT				
 * 61.0 in³	30°	1"	754C3N10	* Interior volume with receptacle installed.
	30°	1 1/4"	754C3N12	
	30°	1 1/2"	754C3N15	
	30°	2"	754C3N20	

METAL ANGLE WITH METAL BOX WITH NPT				
 * 59.4 in³	30°	1"	7K4C3N10	* Interior volume with receptacle installed.
	30°	1 1/4"	7K4C3N12	
	30°	1 1/2"	7K4C3N15	
	30°	2"	7K4C3N20	

METAL ANGLE WITH METAL BOX WITH NPT				
 * 91.0 in³	70°	1"	7K4C7N10	* Interior volume with receptacle installed.
	70°	1 1/4"	7K4C7N12	
	70°	1 1/2"	7K4C7N15	
	70°	2"	7K4C7N20	

NPT on top or bottom (if rotated). For other configurations, contact Customer Service.

ANGLES

POLY ANGLE		
	30°	554M3

METAL ANGLE		
	0°	5K4M0
	30°	5K4M3
	70°	5K4M7

MISCELLANEOUS ACCESSORIES

FINGER DRAWPLATES		
	31-6A346	Set of Two (2) Recommended for all assembly applications, for facilitated mating.

PROTECTIVE INLET/PLUG CAP		
	31-6A426	For Inlets/Plugs Only.

PADLOCKABLE INLET/PLUG CAP		
	DS6MC	Aluminum – For Inlets/Plugs Only. -A155 suffix required to maintain water ingress protection.

RECEPTACLE LOCKING PIN		
	LP-843	

SCAN ME >>

Notes: For Zone 2 DS dimensions refer to DS dimensions on pgs 55-56.

! Accessories rated for hazardous locations are not returnable.

HAZARDOUS LOCATION

DS100C Hazardous Location - 100 A

Ratings

- **Max Amperage & Voltage**
  100 A, 600 VAC
- **Current Interruption Capability**
  Not for current interrupting
- **Horsepower Ratings**

120 V	1Ø	5 hp
240 V	1Ø	10 hp
208 V	3Ø	20 hp
240 V	3Ø	20 hp
480 V	3Ø	50 hp
600 V	3Ø	50 hp

- **Short Circuit Rating**
  100 kA Withstand
  Testing was performed with 225 A RK1 fast-acting Mersen fuses.
- **Environmental Ratings**
  Type 4X
- **Temperature Range**
  Min -40°F/Max 104°F
  See pg 260 for temperatures outside of this range
- **Wiring Capacity**
  Based on THHN wire sizes.
  Min 10 AWG Max 2 AWG
  Aux Contacts: Max 14 AWG
- **Applicable Standards**
  CSA C22.2 No. 182.1-07
  C22.2 No. 213-M1987
- **Hazardous Ratings**
  Class I, Division 2, Groups ABCD, T6
  Class I, Zone 2, IIC

Devices rated for hazardous locations are not returnable.

! Don't forget to add installation accessories to your order

Receptacle (female)



Inlet (male)



NOTE: Poly devices should not be inter-mated with metal devices

VOLTAGE	POLARITY	PART # POLY	PART # METAL	PART # POLY	PART # METAL
120 V	1P+N+G	35-64235-C-K16-HAZ	36-64235-C-K16-HAZ	35-68235-C-K16-HAZ	36-68235-C-K16-HAZ
120 208 V	3P+N+G	35-64237-C-K16-HAZ	36-64237-C-K16-HAZ	35-68237-C-K16-HAZ	36-68237-C-K16-HAZ
125 V	1P+N+G	35-64175-C-K07-HAZ	36-64175-C-K07-HAZ	35-68175-C-K07-HAZ	36-68175-C-K07-HAZ
125 250 V	2P+N+G	35-64176-C-K07-HAZ	36-64176-C-K07-HAZ	35-68176-C-K07-HAZ	36-68176-C-K07-HAZ
208 V	2P+G	35-64232-C-K16-HAZ	36-64232-C-K16-HAZ	35-68232-C-K16-HAZ	36-68232-C-K16-HAZ
208 V	3P+G	35-64233-C-K16-HAZ	36-64233-C-K16-HAZ	35-68233-C-K16-HAZ	36-68233-C-K16-HAZ
250 V	2P+G	35-64172-C-K07-HAZ	36-64172-C-K07-HAZ	35-68172-C-K07-HAZ	36-68172-C-K07-HAZ
250 V	3P+G	35-64173-C-K07-HAZ	36-64173-C-K07-HAZ	35-68173-C-K07-HAZ	36-68173-C-K07-HAZ
277 V	1P+N+G	35-64245-C-K04-HAZ	36-64245-C-K04-HAZ	35-68245-C-K04-HAZ	36-68245-C-K04-HAZ
277 480 V	3P+N+G	35-64247-C-K04-HAZ	36-64247-C-K04-HAZ	35-68247-C-K04-HAZ	36-68247-C-K04-HAZ
347 600 V	3P+N+G	35-64187-C-K14-HAZ	36-64187-C-K14-HAZ	35-68187-C-K14-HAZ	36-68187-C-K14-HAZ
480 V	2P+G	35-64242-C-K04-HAZ	36-64242-C-K04-HAZ	35-68242-C-K04-HAZ	36-68242-C-K04-HAZ
480 V	3P+G	35-64243-C-K04-HAZ	36-64243-C-K04-HAZ	35-68243-C-K04-HAZ	36-68243-C-K04-HAZ
600 V	2P+G	35-64182-C-K14-HAZ	36-64182-C-K14-HAZ	35-68182-C-K14-HAZ	36-68182-C-K14-HAZ
600 V	3P+G	35-64183-C-K14-HAZ	36-64183-C-K14-HAZ	35-68183-C-K14-HAZ	36-68183-C-K14-HAZ

Part Number Example

480 V DS100C + 2 aux contacts

DS100C Poly recept 3P+G = 35-64243-C-K04-***972***-HAZ

480 V DS100C with no options

DS100C Poly recept 3P+G = 35-64243-C-K04-HAZ

RECEPTACLE OPTIONS	SUFFIX #	INLET OPTIONS	SUFFIX #
With 2 Auxiliary/Pilot Contacts	**Recept # -972**	With 2 Auxiliary/Pilot Contacts	**Inlet # -972**
With 3 Auxiliary/Pilot Contacts	**Recept # -263**	With 3 Auxiliary/Pilot Contacts	**Inlet # -263**
With 4 Auxiliary/Pilot Contacts	**Recept # -264**	With 4 Auxiliary/Pilot Contacts	**Inlet # -264**
Normally Open Lid Configuration	**Recept # -NO**	Without Lockout Hole	**Inlet # -A155**

! See pages 237-246 for detailed information on these options

Feature Spotlight – Screw-Type Locking Pawl

Listing Requirement
Users must tighten screw to lock the plug in the mated position



5/16" hole for added security

Zone 2/Division 2 DS100C receptacles feature a standard screw-type locking pawl. This required feature allows the user to lock the plug to the receptacle by tightening a screw on the pawl.

For added security, a lockout hole is included on the receptacle that enables the user to insert a 5/16" lock or locking pin to prevent the plug from being disconnected or to lock the receptacle lid closed.

Handle Option Guide pgs 243-244

INSTALLATION ACCESSORIES – SIZE 4

When properly installed, all accessories meet or exceed the environmental ratings of the devices they are mounted to; unless otherwise noted.

HANDLES

HANDLE WITH NPT		PART # POLY	PART # METAL
 Poly	1/2"	554P0N05	5K4P0N05
	3/4"	554P0N07	5K4P0N07
	1"	554P0N10	5K4P0N10
 Metal	1 1/4"	554P0N12	5K4P0N12
	1 1/2"	554P0N15	5K4P0N15

For available cord grips, see pg 232.

POLY HANDLE WITH CABLE RANGE		
	.511-1.377"	554P0D35

BOXES

POLY ANGLE WITH METAL BOX WITH NPT				
 * 61.0 in³	30°	1"	754C3N10	* Interior volume with receptacle installed.
	30°	1 1/4"	754C3N12	
	30°	1 1/2"	754C3N15	
	30°	2"	754C3N20	

METAL ANGLE WITH METAL BOX WITH NPT				
 * 59.4 in³	30°	1"	7K4C3N10	* Interior volume with receptacle installed.
	30°	1 1/4"	7K4C3N12	
	30°	1 1/2"	7K4C3N15	
	30°	2"	7K4C3N20	

METAL ANGLE WITH METAL BOX WITH NPT				
 * 170.0 in³	70°	1"	7K4C7N10	* Interior volume with receptacle installed.
	70°	1 1/4"	7K4C7N12	
	70°	1 1/2"	7K4C7N15	
	70°	2"	7K4C7N20	

NPT on top or bottom (if rotated). For other configurations, contact Customer Service.

ANGLES

POLY ANGLE		
	30°	554M3

METAL ANGLE		
	0°	5K4M0
	30°	5K4M3
	70°	5K4M7

MISCELLANEOUS ACCESSORIES

FINGER DRAWPLATES		
	31-6A346	Set of Two (2) Recommended for all assembly applications, for facilitated mating.

PROTECTIVE INLET/PLUG CAP		
	31-6A426	For Inlets/Plugs Only.

PADLOCKABLE INLET/PLUG CAP		
	DS6MC	Aluminum – For Inlets/Plugs Only. -A155 suffix required to maintain water ingress protection.

RECEPTACLE LOCKING PIN		
	LP-843	

SCAN ME >>

Notes: For Zone 2 DS dimensions refer to DS dimensions on pgs 55-56.

! Accessories rated for hazardous locations are not returnable.

HAZARDOUS LOCATION

DSN150 Hazardous Location - 150 A

Ratings

- **Max Amperage & Voltage**
  150 A, 600 VAC
- **Current Interruption Capability**
  Not for current interrupting
- **Horsepower Ratings**

120 V	1Ø	7.5 hp
240 V	1Ø	20 hp
208 V	3Ø	30 hp
240 V	3Ø	30 hp
480 V	3Ø	75 hp
600 V	3Ø	75 hp

- **Short Circuit Rating**
  100 kA Withstand
  Testing was performed with 225 A RK1 fast-acting Mersen fuses.
  10 kA Withstand
  Testing was performed with 400 A RK1 fast-acting Mersen fuses.
- **Environmental Ratings**
  Type 4X
- **Temperature Range**
  Min -40°F/Max 104°F
  See pg 260 for temperatures outside of this range
- **Wiring Capacity**
  Based on THHN wire sizes.
  Min 4 AWG Max 2/0 AWG
  Aux Contacts: Max 14 AWG
- **Applicable Standards**
  CSA C22.2 No. 182.1-07
  C22.2 No. 213-M1987
- **Hazardous Ratings**
  Class I, Division 2, Groups ABCD, T6
  Class I, Zone 2, IIC

Receptacle (female) **Inlet (male)**



Devices rated for hazardous locations are not returnable.

Don't forget to add installation accessories to your order

Hazardous Location DSN150 lid is Self-Returning and opens to 180°

VOLTAGE	POLARITY	PART # METAL	PART # METAL
120 V	1P+N+G	66-94165-HAZ	66-98165-HAZ
120 208 V	3P+N+G	66-94167-HAZ	66-98167-HAZ
125 V	1P+N+G	66-94075-HAZ	66-98075-HAZ
125 250 V	2P+N+G	66-94076-HAZ	66-98076-HAZ
208 V	2P+G	66-94162-HAZ	66-98162-HAZ
208 V	3P+G	66-94163-HAZ	66-98163-HAZ
250 V	2P+G	66-94072-HAZ	66-98072-HAZ
250 V	3P+G	66-94073-HAZ	66-98073-HAZ
277 V	1P+N+G	66-94045-HAZ	66-98045-HAZ
277 480 V	3P+N+G	66-94047-HAZ	66-98047-HAZ
347 600 V	3P+N+G	66-94147-HAZ	66-98147-HAZ
480 V	2P+G	66-94042-HAZ	66-98042-HAZ
480 V	3P+G	66-94043-HAZ	66-98043-HAZ
600 V	2P+G	66-94142-HAZ	66-98142-HAZ
600 V	3P+G	66-94143-HAZ	66-98143-HAZ

Part Number Example

480 V DSN150 + 2 aux contacts

DSN150 recept 3P+G = 66-94043-***262***-HAZ

480 V DSN150 with no options

DSN150 recept 3P+G = 66-94043-HAZ

RECEPTACLE OPTIONS	SUFFIX #	INLET OPTIONS	SUFFIX #
With 2 Auxiliary/Pilot Contacts	**Recept # -262**	With 2 Auxiliary/Pilot Contacts	**Inlet # -262**
With 4 Auxiliary/Pilot Contacts	**Recept # -264**	With 4 Auxiliary/Pilot Contacts	**Inlet # -264**
With 6 Auxiliary/Pilot Contacts	**Recept # -976**	With 6 Auxiliary/Pilot Contacts	**Inlet # -976**
Normally Open Lid Configuration	**Recept # -NO**	Without Lockout Hole	**Inlet # -A155**

See pages 237-246 for detailed information on these options

Feature Spotlight – Screw-Type Locking Pawl



Listing Requirement
Users must tighten screw to lock the plug in the mated position

5/16" hole for added security

Zone 2/Division 2 DSN150 receptacles feature a standard screw-type locking pawl. This required feature allows the user to lock the plug to the receptacle by tightening a screw on the pawl. For added security, a lockout hole is included on the receptacle that enables the user to insert a 5/16" lock or locking pin to prevent the plug from being disconnected or to lock the receptacle lid closed.

Handle Option Guide pgs 243-244

INSTALLATION ACCESSORIES – SIZE 5

When properly installed, all accessories meet or exceed the environmental ratings of the devices they are mounted to; unless otherwise noted.

HANDLES

METAL HANDLE WITH NPT		PART #	
 Metal	3/4"	5K5P0N07	For available third-party cord grips, consult factory.
	1"	5K5P0N10	
	1 1/4"	5K5P0N12	
	1 1/2"	5K5P0N15	
	2"	5K5P0N20	

OVERSIZED METAL HANDLE WITH NPT		
	3/4"	7K5P0N07
	1"	7K5P0N10
	1 1/4"	7K5P0N12
	1 1/2"	7K5P0N15
	2"	7K5P0N20
	2 1/2"	7K5P0N25

SANTOPRENE HANDLE WITH CABLE RANGE		
	.708-.984"	555P0D25
	.984-1.377"	555P0D35
	1.377-1.771"	555P0D45
	1.771-1.929"	555P0D49

BOXES

METAL ANGLE WITH METAL BOX WITH NPT				
 111.8 in³	30°	1 1/4"	7K5C3N12	* Interior volume with receptacle installed.
	30°	1 1/2"	7K5C3N15	
	30°	2"	7K5C3N20	
	30°	2 1/2"	7K5C3N25	

METAL ANGLE WITH METAL BOX WITH NPT				
 175.0 in³	70°	1 1/4"	7K5C7N12	* Interior volume with receptacle installed.
	70°	1 1/2"	7K5C7N15	
	70°	2"	7K5C7N20	
	70°	2 1/2"	7K5C7N25	

NPT on top or bottom (if rotated). For other configurations, contact Customer Service.

ANGLES

METAL ANGLE		
	0°	5K5M0
	30°	5K5M3
	70°	5K5M7

MISCELLANEOUS ACCESSORIES

PROTECTIVE INLET/PLUG CAP		
	31-9A426	For Inlets/Plugs Only.

PADLOCKABLE INLET/PLUG CAP		
	DS9MC	Aluminum – For Inlets/Plugs Only. -A155 suffix required to maintain water ingress protection.

RECEPTACLE LOCKING PIN	
	LP-843

HAZARDOUS LOCATION

SCAN ME >>

Notes: For Zone 2 DSN dimensions refer to DSN dimensions on pgs 39-40.

! Accessories rated for hazardous locations are not returnable.

DS200 Hazardous Location - 200 A

Ratings

- **Max Amperage & Voltage**
  200 A, 600 VAC
- **Current Interruption Capability**
  Not for current interrupting
- **Horsepower Ratings**

208 V	3Ø	40 hp
240 V	3Ø	40 hp
480 V	3Ø	100 hp
600 V	3Ø	100 hp

- **Short Circuit Rating**
  65 kA Close & Withstand
  Testing was performed with 200 A RK5 TD fast-acting Mersen fuses. .
  10 kA Close & Withstand
  Testing was performed with 500 A RK5 time delay Mersen fuses.
- **Environmental Ratings**
  Type 4X
- **Temperature Range**
  Min -40°F/Max 104°F
  See pg 260 for temperatures outside this range.
- **Wiring Capacity**
  Based on THHN wire sizes.
  Min 4 AWG Max 4/0 AWG
  Aux Contacts: Max 14 AWG
- **Applicable Standards**
  CSA C22.2 No. 182.1-07
  C22.2 No. 213-M1987
- **Hazardous Ratings**
  Class I, Division 2, Groups ABCD, T6
  Class I, Zone 2, IIC

Receptacle (female) **Inlet (male)**



Devices rated for hazardous locations are not returnable.

! Don't forget to add installation accessories to your order

Standard Hazardous Location DS200 lid is Self-Returning and opens to 180° (°s)

VOLTAGE	POLARITY	PART # METAL	PART # METAL
120 V	1P+N+G	36-24165-HAZ	36-28165-HAZ
120 208 V	3P+N+G	36-24167-HAZ	36-28167-HAZ
125 V	1P+N+G	36-24075-HAZ	36-28075-HAZ
125 250 V	2P+N+G	36-24076-HAZ	36-28076-HAZ
208 V	2P+G	36-24162-HAZ	36-28162-HAZ
208 V	3P+G	36-24163-HAZ	36-28163-HAZ
250 V	2P+G	36-24072-HAZ	36-28072-HAZ
250 V	3P+G	36-24073-HAZ	36-28073-HAZ
277 V	1P+N+G	36-24045-HAZ	36-28045-HAZ
277 480 V	3P+N+G	36-24047-HAZ	36-28047-HAZ
347 600 V	3P+N+G	36-24147-HAZ	36-28147-HAZ
480 V	2P+G	36-24042-HAZ	36-28042-HAZ
480 V	3P+G	36-24043-HAZ	36-28043-HAZ
600 V	2P+G	36-24142-HAZ	36-28142-HAZ
600 V	3P+G	36-24143-HAZ	36-28143-HAZ

Part Number Example

480 V DS200 + 2 aux contacts

DS200 recept 3P+G = 36-24043-***972***-HAZ

480 V DS200 with no options

DS200 recept 3P+G = 36-24043-HAZ

RECEPTACLE OPTIONS	SUFFIX #	INLET OPTIONS	SUFFIX #
With 2 Auxiliary/Pilot Contacts	**Recept # -972**	With 2 Auxiliary/Pilot Contacts	**Inlet # -972**
With 4 Auxiliary/Pilot Contacts	**Recept # -174**	With 4 Auxiliary/Pilot Contacts	**Inlet # -174**
With 6 Auxiliary/Pilot Contacts	**Recept # -976**	With 6 Auxiliary/Pilot Contacts	**Inlet # -976**
Normally Open Lid Configuration	**Recept # -NO**	Without Lockout Hole	**Inlet # -A155**

! See pages 237-246 for detailed information on these options

Feature Spotlight – Screw-Type Locking Pawl



Listing Requirement
Users must tighten screw to lock the plug in the mated position

5/16" hole for added security

Zone 2/Division 2 DS200 receptacles feature a standard screw-type locking pawl. This required feature allows the user to lock the plug to the receptacle by tightening a screw on the pawl. For added security, a lockout hole is included on the receptacle that enables the user to insert a 5/16" lock or locking pin to prevent the plug from being disconnected or to lock the receptacle lid closed.

Handle Option Guide pgs 243-244

INSTALLATION ACCESSORIES – SIZE 6

When properly installed, all accessories meet or exceed the environmental ratings of the devices they are mounted to; unless otherwise noted.

HANDLES

HANDLE WITH NPT	PART # METAL
1"	5K6P0N10
1 1/4"	5K6P0N12
1 1/2"	5K6P0N15
2"	5K6P0N20
2 1/2"	5K6P0N25
3"	5K6P0N30


Metal

For available cord grips, see pg 232.

SANTOPRENE HANDLE WITH CABLE RANGE	
.984-1.377"	556P0D35
1.377-1.771"	556P0D45
1.771-1.929"	556P0D49



BOXES

METAL ANGLE WITH METAL BOX WITH NPT		PART #
60°	1 1/2"	7K6C6N15
60°	2"	7K6C6N20
60°	2 1/2"	7K6C6N25


* 248.4 in^3

* Interior volume with receptacle installed.

NPT on top or bottom (if rotated). For other configurations, contact Customer Service.

ANGLES

METAL ANGLE		
0°		5K6M0
60°		5K6M6





MISCELLANEOUS ACCESSORIES

PROTECTIVE INLET/PLUG CAP		
	39-2A426	For Inlets/Plugs Only.



PADLOCKABLE INLET/PLUG CAP		
	DS2MC	Aluminum – For Inlets/Plugs Only. -A155 suffix required to maintain water ingress protection.



RECEPTACLE LOCKING PIN	
	LP-843



SCAN ME >>

Notes: For Zone 2 DS dimensions refer to DS dimensions on pgs 55-56.

! Accessories rated for hazardous locations are not returnable.

HAZARDOUS LOCATION

DR30 Hazardous Location - 30 A

Ratings

- **Max Amperage & Voltage**
  30 A, 600 VAC
- **Current Interruption Capability**
  Not for current interrupting
- **Short Circuit Rating**
  100 kA Withstand
  Testing was performed with RK1 current limiting fuses sized at 100% of the device's ampacity rating.
- **Environmental Ratings**
  Type 4X
- **Temperature Range**
  Min -40°F/Max 104°F
  See pg 260 for temperatures outside this range.
- **Wiring Capacity**
  Based on THHN wire sizes.
  Min 14 AWG Max 8 AWG
  Aux Contacts: Max 14 AWG
- **Applicable Standards**
  CSA C22.2 No. 182.1-07
  C22.2 No. 213-M1987
- **Hazardous Ratings**
  Class I, Division 2, Groups ABCD, T6
  Class I, Zone 2, IIC

Devices rated for hazardous locations are not returnable.

! Don't forget to add installation accessories to your order

Receptacle (female)



Inlet (male)



Hazardous Location DR30 lid is Self-Returning

VOLTAGE	POLARITY	PART # POLY	PART # POLY
120 V	1P+N+G	35-14235-K16-HAZ	35-18235-K16-HAZ
120 208 V	3P+N+G	35-14237-K16-HAZ	35-18237-K16-HAZ
125 V	1P+N+G	35-14175-K07-HAZ	35-18175-K07-HAZ
125 250 V	2P+N+G	35-14176-K07-HAZ	35-18176-K07-HAZ
208 V	2P+G	35-14232-K16-HAZ	35-18232-K16-HAZ
208 V	3P+G	35-14233-K16-HAZ	35-18233-K16-HAZ
250 V	2P+G	35-14172-K07-HAZ	35-18172-K07-HAZ
250 V	3P+G	35-14173-K07-HAZ	35-18173-K07-HAZ
277 V	1P+N+G	35-14245-K04-HAZ	35-18245-K04-HAZ
277 480 V	3P+N+G	35-14247-K04-HAZ	35-18247-K04-HAZ
347 600 V	3P+N+G	35-14187-K14-HAZ	35-18187-K07-HAZ
480 V	2P+G	35-14242-K04-HAZ	35-18242-K04-HAZ
480 V	3P+G	35-14243-K04-HAZ	35-18243-K04-HAZ
600 V	2P+G	35-14182-K14-HAZ	35-18182-K14-HAZ
600 V	3P+G	35-14183-K14-HAZ	35-18183-K14-HAZ

Part Number Example

480 V DR30 + 2 aux contacts

DR30 recept 3P+G = 35-14243-K04-***972***-HAZ

480 V DR30 with no options

DR30 recept 3P+G = 35-14243-K04-HAZ

RECEPTACLE OPTIONS	SUFFIX #	INLET OPTIONS	SUFFIX #
With 2 Auxiliary/Pilot Contacts	**Recept # -972**	With 2 Auxiliary/Pilot Contacts	**Inlet # -972**
Normally Open Lid Configuration	**Recept # - NO**	Without Lockout Hole	**Inlet # -A155**

! See pages 237-246 for detailed information on these options

Feature Spotlight – Screw-Type Locking Pawl

Listing Requirement
Users must tighten screw to lock the plug in the mated position



5/16" hole for added security

Zone 2/Division 2 DR30 receptacles feature a standard screw-type locking pawl. This required feature allows the user to lock the plug to the receptacle by tightening a screw on the pawl.

For added security, a lockout hole is included on the receptacle that enables the user to insert a 5/16" lock or locking pin to prevent the plug from being disconnected or to lock the receptacle lid closed.

Handle Option Guide pgs 243-244

INSTALLATION ACCESSORIES – SIZE 2

When properly installed, all accessories meet or exceed the environmental ratings of the devices they are mounted to; unless otherwise noted.

HANDLES

HANDLE WITH NPT		PART # POLY	PART # METAL
 Poly	1/2"	552P0N05	5K2P0N05
	3/4"	552P0N07	5K2P0N07
 Metal	1"	552P0N10	5K2P0N10
	1 1/4"	552P0N12	–

For available cord grips, see pg 232.

POLY HANDLE WITH CABLE RANGE		
	.196-.826"	552P0D21

BOXES

POLY ANGLE WITH METAL BOX WITH NPT				
 * 28.7 in³	30°	1/2"	752C3N05	* Interior volume with receptacle installed.
	30°	3/4"	752C3N07	
	30°	1"	752C3N10	
	30°	1 1/4"	752C3N12	

METAL ANGLE WITH METAL BOX WITH NPT				
 * 28.7 in³	30°	1/2"	7K2C3N05	* Interior volume with receptacle installed.
	30°	3/4"	7K2C3N07	
	30°	1"	7K2C3N10	
	30°	1 1/4"	7K2C3N12	

POLY ANGLE WITH LARGER METAL BOX WITH NPT				
 * 74.6 in³	70°	1/2"	752C7N05	* Interior volume with receptacle installed.
	70°	3/4"	752C7N07	
	70°	1"	752C7N10	
	70°	1 1/4"	752C7N12	
	70°	1 1/2"	752C7N15	

NPT on top or bottom (if rotated). For other configurations, contact Customer Service.

ANGLES

POLY ANGLE		
	30°	552M3

METAL ANGLE		
	0°	5K2M0
	30°	5K2M3

MISCELLANEOUS ACCESSORIES

FINGER DRAWPLATES		
	61-3A346	Set of Two (2) Recommended for all assembly applications, for facilitated mating.

PROTECTIVE INLET/PLUG CAP		
	31-1A426	For Inlets/Plugs Only.

RECEPTACLE LOCKING PIN	
	LP-843

SCAN ME >>

Notes: For Zone 2 DR dimensions refer to DR dimensions on pgs 103-104.

! Accessories rated for hazardous locations are not returnable.

HAZARDOUS LOCATION

DR50 Hazardous Location - 50 A

Ratings

- **Max Amperage & Voltage**
  50 A, 600 VAC
- **Current Interruption Capability**
  Not for current interrupting
- **Short Circuit Rating**
  100 kA Withstand
  Testing was performed with RK1 current limiting fuses sized at 100% of the device's ampacity rating.
- **Environmental Ratings**
  Type 4X
- **Temperature Range**
  Min -40°F/Max 104°F
  See pg 260 for temperatures outside this range.
- **Wiring Capacity**
  Based on THHN wire sizes.
  Min 14 AWG Max 4 AWG
  Aux Contacts: Max 14 AWG
- **Applicable Standards**
  CSA C22.2 No. 182.1-07
  C22.2 No. 213-M1987
- **Hazardous Ratings**
  Class I, Division 2, Groups ABCD, T6
  Class I, Zone 2, IIC

Devices rated for hazardous locations are not returnable.

! Don't forget to add installation accessories to your order

Receptacle (female)



Inlet (male)



Hazardous Location DR50 lid is normally closed

VOLTAGE	POLARITY	PART # POLY	PART # POLY
120 V	1P+N+G	35-34235-K16-HAZ	35-38235-K16-HAZ
120 208 V	3P+N+G	35-34237-K16-HAZ	35-38237-K16-HAZ
125 V	1P+N+G	35-34175-K07-HAZ	35-38175-K07-HAZ
125 250 V	2P+N+G	35-34176-K07-HAZ	35-38176-K07-HAZ
208 V	2P+G	35-34232-K16-HAZ	35-38232-K16-HAZ
208 V	3P+G	35-34233-K16-HAZ	35-38233-K16-HAZ
250 V	2P+G	35-34172-K07-HAZ	35-38172-K07-HAZ
250 V	3P+G	35-34173-K07-HAZ	35-38173-K07-HAZ
277 V	1P+N+G	35-34245-K04-HAZ	35-38245-K04-HAZ
277 480 V	3P+N+G	35-34247-K04-HAZ	35-38247-K04-HAZ
347 600 V	3P+N+G	35-34187-K14-HAZ	35-38187-K14-HAZ
480 V	2P+G	35-34242-K04-HAZ	35-38242-K04-HAZ
480 V	3P+G	35-34243-K04-HAZ	35-38243-K04-HAZ
600 V	2P+G	35-34182-K14-HAZ	35-38182-K14-HAZ
600 V	3P+G	35-34183-K14-HAZ	35-38183-K14-HAZ

Part Number Example

480 V DR50 + 2 aux contacts

DR50 recept 3P+G = 35-34243-K04-***972***-HAZ

480 V DR50 with no options

DR50 recept 3P+G = 35-34243-K04-HAZ

RECEPTACLE OPTIONS	SUFFIX #	INLET OPTIONS	SUFFIX #
With 2 Auxiliary/Pilot Contacts	**Recept # -972**	With 2 Auxiliary/Pilot Contacts	**Inlet # -972**
With 3 Auxiliary/Pilot Contacts	**Recept # -973**	With 3 Auxiliary/Pilot Contacts	**Inlet # -973**
With 4 Auxiliary/Pilot Contacts	**Recept # -974**	With 4 Auxiliary/Pilot Contacts	**Inlet # -974**
Normally Open Lid Configuration	**Recept # -NO**	Without Lockout Hole	**Inlet # -A155**

! See pages 237-246 for detailed information on these options

Feature Spotlight – Screw-Type Locking Pawl

Listing Requirement
Users must tighten screw to lock the plug in the mated position



5/16" hole for added security

Zone 2/Division 2 DR50 receptacles feature a standard screw-type locking pawl. This required feature allows the user to lock the plug to the receptacle by tightening a screw on the pawl.

For added security, a lockout hole is included on the receptacle that enables the user to insert a 5/16" lock or locking pin to prevent the plug from being disconnected or to lock the receptacle lid closed.

Handle Option Guide pgs 243-244

INSTALLATION ACCESSORIES – SIZE 3

When properly installed, all accessories meet or exceed the environmental ratings of the devices they are mounted to; unless otherwise noted.

HANDLES

HANDLE WITH NPT		PART # POLY	PART # METAL
 poly metal	1/2"	553P0N05	5K3P0N05
	3/4"	553P0N07	5K3P0N07
	1"	553P0N10	5K3P0N10
	1 1/4"	553P0N12	5K3P0N12

For available cord grips, see pg 232.

POLY HANDLE WITH CABLE RANGE		
	.390-1.180"	553P0D30

BOXES

POLY ANGLE WITH METAL BOX WITH NPT				
 * 29.6 in³	30°	1/2"	753C3N05	* Interior volume with receptacle installed.
	30°	3/4"	753C3N07	
	30°	1"	753C3N10	
	30°	1 1/4"	753C3N12	

METAL ANGLE WITH METAL BOX WITH NPT				
 * 29.6 in³	30°	1/2"	7K3C3N05	* Interior volume with receptacle installed.
	30°	3/4"	7K3C3N07	
	30°	1"	7K3C3N10	
	30°	1 1/4"	7K3C3N12	

POLY ANGLE WITH LARGER METAL BOX WITH NPT				
 * 177.7 in³	70°	1/2"	753C7N05	* Interior volume with receptacle installed.
	70°	3/4"	753C7N07	
	70°	1"	753C7N10	
	70°	1 1/4"	753C7N12	
	70°	1 1/2"	753C7N15	

METAL ANGLE WITH METAL BOX WITH NPT				
 * 27.7 in³	70°	1/2"	7K3C7N05	* Interior volume with receptacle installed.
	70°	3/4"	7K3C7N07	
	70°	1"	7K3C7N10	
	70°	1 1/4"	7K3C7N12	

NPT on top or bottom (if rotated). For other configurations, contact Customer Service.

ANGLES

POLY ANGLE		
	30°	553M3

METAL ANGLE		
	0°	5K3M0
	30°	5K3M3
	70°	5K3M7

MISCELLANEOUS ACCESSORIES

FINGER DRAWPLATES		
	61-6A346	Set of Two (2) Recommended for all assembly applications, for facilitated mating.

PROTECTIVE INLET/PLUG CAP		
	31-3A426	For Inlets/Plugs Only.

RECEPTACLE LOCKING PIN	
	LP-843

HAZARDOUS LOCATION

SCAN ME >>

Notes: For Zone 2 DR dimensions refer to DR dimensions on pgs 103-104.

! Accessories rated for hazardous locations are not returnable.

DR250 Hazardous Location - 250 A

Ratings

- **Max Amperage & Voltage**
  250 A, 600 VAC
- **Current Interruption Capability**
  Not for current interrupting
- **Short Circuit Rating**
  10 kA Withstand
  Testing was performed with RK1 current limiting fuses sized at 100% of the device's ampacity rating.
- **Environmental Ratings**
  Type 4X
- **Temperature Range**
  Min -40°F/Max 104°F
  See pg 260 for temperatures outside this range.
- **Wiring Capacity**
  Based on THHN wire sizes.
  Min 4 AWG Max 4/0 AWG
  Aux Contacts: Max 14 AWG
- **Applicable Standards**
  CSA C22.2 No. 182.1-07
  C22.2 No. 213-M1987
- **Hazardous Ratings**
  Class I, Division 2, Groups ABCD, T6
  Class I, Zone 2, IIC

Receptacle (female)



Inlet (male)



Devices rated for hazardous locations are not returnable.

Don't forget to add installation accessories to your order

Standard Hazardous Location DR250 lid is normally closed and opens to 90°

VOLTAGE	POLARITY	PART # METAL	PART # METAL
120 V	1P+N+G	36-24235-K16-HAZ	36-28235-K16-HAZ
120 208 V	3P+N+G	36-24237-K16-HAZ	36-28237-K16-HAZ
125 V	1P+N+G	36-24035-K07-HAZ	36-28035-K07-HAZ
125 250 V	2P+N+G	36-24036-K07-HAZ	36-28036-K07-HAZ
208 V	2P+G	36-24232-K16-HAZ	36-28232-K16-HAZ
208 V	3P+G	36-24233-K16-HAZ	36-28233-K16-HAZ
250 V	2P+G	36-24032-K07-HAZ	36-28032-K07-HAZ
250 V	3P+G	36-24033-K07-HAZ	36-28033-K07-HAZ
277 V	1P+N+G	36-24245-K04-HAZ	36-28245-K04-HAZ
277 480 V	3P+N+G	36-24247-K04-HAZ	36-28247-K04-HAZ
347 600 V	3P+N+G	36-24027-K14-HAZ	36-28027-K14-HAZ
480 V	2P+G	36-24242-K04-HAZ	36-28242-K04-HAZ
480 V	3P+G	36-24243-K04-HAZ	36-28243-K04-HAZ
600 V	2P+G	36-24022-K14-HAZ	36-28022-K14-HAZ
600 V	3P+G	36-24023-K14-HAZ	36-28023-K14-HAZ

Part Number Example

480 V DR250 + 2 aux contacts

DR250 recept 3P+G = 36-24243-K04-***972***-HAZ

480 V DR250 with no options

DR250 recept 3P+G = 36-24243-K04-HAZ

RECEPTACLE OPTIONS	SUFFIX #	INLET OPTIONS	SUFFIX #
With 2 Auxiliary/Pilot Contacts	**Recept # -972**	With 2 Auxiliary/Pilot Contacts	**Inlet # -972**
With 4 Auxiliary/Pilot Contacts	**Recept # -174**	With 4 Auxiliary/Pilot Contacts	**Inlet # -174**
With 6 Auxiliary/Pilot Contacts	**Recept # -976**	With 6 Auxiliary/Pilot Contacts	**Inlet # -976**
Normally Open Lid Configuration	**Recept # - NO**	Without Lockout Hole	**Inlet # -A155**

See pages 237-246 for detailed information on these options

Feature Spotlight – Screw-Type Locking Pawl

Listing Requirement
Users must tighten screw to lock the plug in the mated position



5/16" hole for added security

Zone 2/Division 2 DR250 receptacles feature a standard screw-type locking pawl. This required feature allows the user to lock the plug to the receptacle by tightening a screw on the pawl.

For added security, a lockout hole is included on the receptacle that enables the user to insert a 5/16" lock or locking pin to prevent the plug from being disconnected or to lock the receptacle lid closed.

Handle Option Guide pgs 243-244

INSTALLATION ACCESSORIES – SIZE 6

When properly installed, all accessories meet or exceed the environmental ratings of the devices they are mounted to; unless otherwise noted.

HANDLES

HANDLE WITH NPT	PART # METAL
1"	5K6P0N10
1 1/4"	5K6P0N12
1 1/2"	5K6P0N15
2"	5K6P0N20
2 1/2"	5K6P0N25
3"	5K6P0N30



For available cord grips, see pg 232.

SANTOPRENE HANDLE W/CABLE RANGE	
.984-1.377"	556P0D35
1.377-1.771"	556P0D45
1.771-1.929"	556P0D49



BOXES

METAL ANGLE WITH METAL BOX WITH NPT		PART #
60°	1 1/2"	7K6C6N15
60°	2"	7K6C6N20
60°	2 1/2"	7K6C6N25



* 248.4 in^3

* Interior volume with receptacle installed.

NPT on top or bottom (if rotated). For other configurations, contact Customer Service.

ANGLES

METAL ANGLE	
0°	5K6M0
60°	5K6M6





MISCELLANEOUS ACCESSORIES

PROTECTIVE INLET/PLUG CAP		
	39-2A426	For Inlets/Plugs Only.

PADLOCKABLE INLET/PLUG CAP		
	DS2MC	Aluminum – For Inlets/Plugs Only -A155 suffix required to maintain water ingress protection.

RECEPTACLE LOCKING PIN	
	LP-843

SCAN ME >>

Notes: For Zone 2 DR dimensions refer to DR dimensions on pgs 103-104

! Accessories rated for hazardous locations are not returnable.

HAZARDOUS LOCATION

DSDC Hazardous Location - 200 A

Ratings

- **Max Amperage & Voltage**
  200 A, 250 VDC
- **Current Interruption Capability**
  Not for current interrupting
- **Environmental Ratings**
  Type 4X
- **Temperature Range**
  Min -40°F/Max 104°F
  See pg 260 for temps below -15°F.
- **Wiring Capacity**
  Based on THHN wire sizes.
  DSDC1 Min 14 AWG Max 8 AWG
  DSDC3 Min 14 AWG Max 4 AWG
  DSDC6 Min 10 AWG Max 2 AWG
  DSDC9 Min 4 AWG Max 2/0 AWG
  DSDC2 Min 4 AWG Max 4/0 AWG
- **Certifications**
  CSA C22.2 No. 182.1-07
  CSA C22.2 No. 213-M1987
- **Hazardous Ratings**
  Class I, Division 2, Groups ABCD, T6
  Class I, Zone 2, IIC

Devices rated for hazardous locations are not returnable.

! Don't forget to add installation accessories to your order

Receptacle (female)



DSDC6 shown

Inlet (male)



DSDC6 shown

VOLTAGE		POLARITY	PART #		PART #	
			POLY	METAL	POLY	METAL
DSDC1	130 V/20 A	2P+G	**35-14109-HAZ**	-	**35-18109-HAZ**	-
DSDC3	130 V/30 A	2P+G	**35-34109-HAZ**	-	**35-38109-HAZ**	-
DSDC6	130 V/60 A	2P+G	**35-64109-HAZ**	**36-64109-HAZ**	**35-68109-HAZ**	**36-68109-HAZ**
DSDC9	130 V/100 A	2P+G	-	**36-94109-HAZ**	-	**36-98109-HAZ**
DSDC2	130 V/200 A	2P+G	-	**36-24109-HAZ**	-	**36-28109-HAZ**
DSDC1	250 V/20 A	2P+G	**35-14209-HAZ**	-	**35-18209-HAZ**	-
DSDC3	250 V/30 A	2P+G	**35-34209-HAZ**	-	**35-38209-HAZ**	-
DSDC6	250 V/60 A	2P+G	**35-64209-HAZ**	**36-64209-HAZ**	**35-68209-HAZ**	**36-68209-HAZ**
DSDC9	250 V/100 A	2P+G	-	**36-94209-HAZ**	-	**36-98209-HAZ**
DSDC2	250 V/200 A	2P+G	-	**36-24209-HAZ**	-	**36-28209-HAZ**

Receptacle Options	Part #
Normally Open Lid	**Recept # - NO**

Metal casings only.

Inlet Options	Part #
Without Lockout Hole	**Inlet # -A155**

Part Number Example

250 V DSDC6 with no options

DSDC6 Metal recept 2P+G = 36-64209-HAZ

Feature Spotlight – Screw-Type Locking Pawl

Listing Requirement
Users must tighten screw to lock the plug in the mated position



DSDC6 shown

Zone 2/Division 2 DSDC receptacles feature a standard screw-type locking pawl. This required feature allows the user to lock the plug to the receptacle by tightening a screw on the pawl.

For added security, a lockout hole is included on the receptacle that enables the user to insert a 5/16" lock or locking pin to prevent the plug from being disconnected or to lock the receptacle lid closed.

5/16" hole for added security

! See pages 237-246 for detailed information on these options

Handle Option Guide pgs 243-244

INSTALLATION ACCESSORIES

When properly installed, all accessories meet or exceed the environmental ratings of the devices they are mounted to; unless otherwise noted.

Accessories rated for hazardous locations are not returnable.

HANDLES



Poly Handle



Poly Handle

	CABLE RANGE	POLY HANDLE
DSDC1	.196-.826"	552P0D21
DSDC3	.390-1.180"	553P0D30
DSDC6	.511-1.377"	554P0D35

1/2"	3/4"	1"	1 1/4"	1 1/2"
552P0N05	552P0N07	552P0N10	552P0N12	-
553P0N05	553P0N07	553P0N10	553P0N12	-
554P0N05	554P0N07	554P0N10	554P0N12	554P0N15

For Zone 2 DSDC dimensions use the cross reference chart below and refer to DS dimensions on pgs 55-56.

DIMENSIONS	
DSDC1	same as DS20
DSDC3	same as DS30
DSDC6	same as DS60
DSDC9	same as DS100
DSDC2	same as DS200



DSDC1, 3, 6 shown

Metal Handle



DSDC9, 2 shown

Metal Handle

	1/2"	3/4"	1"	1 1/4"	1 1/2"	2"	2 1/2"	3"
DSDC1	5K2P0N05	5K2P0N07	5K2P0N10	5K2P0N12	-	-	-	-
DSDC3	5K3P0N05	5K3P0N07	5K3P0N10	5K3P0N12	-	-	-	-
DSDC6	5K4P0N05	5K4P0N07	5K4P0N10	5K4P0N12	5K4P0N15	-	-	-
DSDC9	-	5K5P0N07	5K5P0N10	5K5P0N12	5K5P0N15	5K5P0N20	-	-
DSDC2	-	-	5K6P0N10	5K6P0N12	5K6P0N15	5K6P0N20	5K6P0N25	5K6P0N30

SCAN ME >>

BOXES



DSDC1, 3, 6 shown

Poly Angle 30° with Metal Box

	1/2"	3/4"	1"	1 1/4"	1 1/2"	2"
DSDC1	752C3N05	752C3N07	752C3N10	752C3N12	-	-
DSDC3	753C3N05	753C3N07	753C3N10	753C3N12	-	-
DSDC6	-	-	754C3N10	754C3N12	754C3N15	754C3N20
DSDC9	-	-	-	-	-	-
DSDC2	-	-	-	-	-	-



DSDC1, 3, 6 shown



DSDC9, 2 shown

Metal Angle 30° with Metal Box (DSDC2 60°)

	1/2"	3/4"	1"	1 1/4"	1 1/2"	2"	2 1/2"
DSDC1	7K2C3N05	7K2C3N07	7K2C3N10	7K2C3N12	-	-	-
DSDC3	7K3C3N05	7K3C3N07	7K3C3N10	7K3C3N12	-	-	-
DSDC6	-	-	7K4C3N10	7K4C3N12	7K4C3N15	7K4C3N20	-
DSDC9	-	-	-	7K5C3N12	7K5C3N15	7K5C3N20	7K5C3N25
DSDC2	-	-	-	-	7K6C6N15	7K6C6N20	7K6C6N25



Poly Angle 70° with Larger Metal Wall Box with NPT

	1/2"	3/4"	1"	1 1/4"	1 1/2"
DSDC1	752C7N05	752C7N07	752C7N10	752C7N12	752C7N15
DSDC3	753C7N05	753C7N07	753C7N10	753C7N12	753C7N15



Metal Angle 70° with Metal Box with NPT

	1"	1 1/4"	1 1/2"	2"	2 1/2"
DSDC6	7K4C7N10	7K4C7N12	7K4C7N15	7K4C7N20	-
DSDC9	-	7K5C7N12	7K5C7N15	7K5C7N20	7K5C7N25

ANGLES



	POLY 30° ANGLE	METAL 30° ANGLE	METAL 70° ANGLE	METAL STRAIGHT ADAPTER
DSDC1	552M3	5K2M3	-	5K2M0
DSDC3	553M3	5K3M3	5K3M7	5K3M0
DSDC6	554M3	5K4M3	5K4M7	5K4M0
DSDC9	-	5K5M3	5K5M7	5K5M0
DSDC2	-	5K6M6 (60°)	-	5K6M0

Accessories rated for hazardous locations are not returnable.

MISC. ACCESSORIES



* Set of Two (2)



For Inlets/Plugs Only



For Inlets/Plugs Only





FINGER DRAWPLATES	PROTECTIVE INLET/PLUG CAP	PADLOCKABLE CAP ALUMINUM	CORD GRIP	RECEPTACLE LOCKING PIN
61-3A426	31-1A426	-	see pg 160	LP-843
61-6A346	31-3A426	-	see pg 160	LP-843
31-6A346	31-6A426	DS6MC	see pg 160	LP-843
**	31-9A426	DS9MC	see pg 160	LP-843
**	39-2A426	DS2MC	see pg 160	LP-843

* Recommended for facilitated mating.
** An easy closing mechanism is standard on DSDC9 and DSDC2.

HAZARDOUS LOCATION

DX
Hazardous Location





Main Advantages

- Rugged construction
- Cost effective design
- Rated for Zone 1 and Zone 21 application

- Features and Ratings p. 198
- Certifications and Testing p. 199
- Operation p. 200
- DX1 p. 201
- DX3 p. 202
- DX6 p. 203
- DX9 p. 204
- Dimensions p. 205

SCAN ME >>

PRODUCT FEATURES



Heavy-Duty Aluminum Casing

All components are enclosed in rugged, copper free aluminum housings for maximum durability and protection.

Arc Isolation Chamber

Minimizes gas/dust volume present during arcing, withstands internal pressure due to ignition of it and isolates the ignition from the outside environment.

Dead-front

The 'dead' load-side switching contacts block access to the receptacle and are locked in the open position until an appropriate mating plug is fully inserted. This prevents unintended access to live parts and ensures user safety.

Spring Operated Switching Mechanism

An integral switching mechanism ensures quick-make, quick-break operation, independent of the motion of the user.

ON & OFF Positions when Mated

The switching mechanism allows the circuit to be disconnected without removing the plug.

Silver-Nickel Butt-Style Contacts

Contact design provides a superior connection, with maximum conductivity, the ability to withstand arcing and oxidation, excellent wear resistance, and a long operating life. A wiping motion during operation also provides a self-cleaning action.

Self-Returning Receptacle Lid

The lid automatically self-returns to a pre-latched position when the plug is removed. This prevents the entry of dust and debris. The lid must be manually latched to maintain IP65 protection.

General Ratings

Amperage	20 to 125 A
Voltage	750 VAC
Frequency	50-400 Hz
Environmental	IP65
Temperature	Min -13°F/Max 140°F* (DX1/DX3) Min -40°F/Max 140°F* (DX6/DX9)

NOM listing available. Contact MELTRIC Engineering. for more information.

Highlighted Feature

Dead-front



The dead-front on the DX receptacle provides protection from accidental tool and wire insertion.

Operating Instructions



When a DX is connected there is total safety.



Pressing the pawl while turning the plug about 30° counterclockwise causes the circuit to be broken.



Now that the circuit is safely de-energized, continue pressing the pawl while withdrawing the plug from the receptacle.



The plug and receptacle are separated. The safety shutter prevents access to live parts.

5 To reconnect, insert plug into receptacle fully, then twist the plug approximately 30° clockwise to make the circuit.

DX Certifications

Hazardous Duty Certification

ATEX and IECEx

II 2 G/D Ex de IIC tD A21

II – Indicates suitability for installation in surface applications (as opposed to underground mine applications).

2 – Indicates suitability for use where a high level of protection is required and where the presence of an explosive atmosphere is likely to occur (Zone 1 and Zone 21 environments).

G/D – Indicates suitability for installation in areas that may contain flammable gases, vapors/mists, or dusts.

Ex de – Protection method for gas atmospheres indicating that explosion protection is provided with (e) increased safety in the conductor termination area, and (d) explosion proof chambers for making and breaking the current that can withstand the pressure of internal ignition and that prevent arcs, flame, or other ignition events from being communicated to the surrounding atmosphere.

IIC – Indicates suitability for installation in areas where exposure to any type of gas, including the most dangerous subdivision C gases may occur.

tD – Protection method for dust atmospheres indicating that explosion protection is provided by the type of enclosure (casing) used.

A21 – Indicates a dust tight enclosure (IP6x) is used to achieve a Zone 21 rating.

ATEX & IECEx certification was performed by LCIE.
* Temperature ratings vary depending on product and ambient temperature. See specific product section for temperature ratings.

Electrical Performance Testing

	Key Performance Tests Passed			
Model	Mechanical Endurance	Electrical Endurance[1]	Overload Testing[2]	Dielectric Test
DX1	-	5000 Operations	50 Operations	2 x V (rated) + 1000 V
DX3	1000 Cycles	1000 Operations	50 Operations	2 x V (rated) + 1000 V
DX6	1000 Cycles	1000 Operations	50 Operations	2 x V (rated) + 1000 V
DX9	1000 Cycles	1000 Operations	50 Operations	2 x V (rated) + 1000 V

[1] @ 100% of rated current and voltage and 0.6 power factor.
[2] @ 125% of rated current, 110% of rated voltage, & 0.6 power factor.

DX complies with	
ATEX	**2014/35/EV Directive**
IEC/EN	60079-0
	60079-1
	60079-7
	60079-31

DX Operation

Connection

1



Insertion of the Plug

As the plug contact is inserted, it engages and depresses the 'dead' switching contact.

This releases the locking mechanism. The switching contact is free to operate.

2



Charging the Operating Spring

Clockwise rotation of the inserted plug winds the operating spring and rotates the switching contact into position to engage with the live receptacle contact.

3



Making the Circuit

With the final few degrees of rotation, the switching contact is released and force from the spring quickly drives it into engagement with the live receptacle contact.

Disconnection



After depressing the pawl, the plug is rotated in a counterclockwise direction. This frees the switching contact for operation and the release of the remaining spring tension causes a quick breaking of the contacts. The plug may now be removed, if desired.



Receptacle with Plug Disconnected

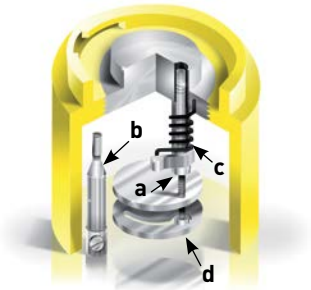

a. **Switching Contact**
Shown in the open (dead) position

b. **'Live' Receptacle Contact**
Accessibility is denied

c. **Operating Spring**
Shown with tension released

d. **Mechanical Locking Device**
Blocks contact operation

DX1 Hazardous Location - 20 A

Ratings

- **Max Amperage & Voltage**
  20 A, 750 VAC
- **Environmental Ratings**
  IP65
- **Temperature Range**
  Min -13°F / Max 140°F
  See pg 260 for temperatures outside this range.
- **Wiring Capacity**
  Based on THHN wire sizes.
  Min 14 AWG Max 8 AWG
- **Applicable Standards**
  ATEX, IECEx
- **Hazardous Location Ratings**

MARECHAL ELECTRIC MAROMME
II2 G/D Ex de IIC tD A21
-25°C ≤ Ta ≤ +60°C T5 T84°C
-25°C ≤ Ta ≤ +50°C T6 T74°C
IECEx LCI 09.0014/LCIE 05 ATEX 6127

Handle Cable Range

SUFFIX	CABLE RANGE SIZE
None	.31" - .51"
-25M	.35" - .63"
-32M	.47" - .83"

Box Size

SUFFIX	NPT THREAD SIZE
-12	1/2"
-34	3/4"
None	1"

NPT sizes are determined by the cable diameter and third party cord grip.

Accessories

PROTECTIVE CAP



For Male Devices Only

DX1	262A926

METAL WALL BOX



NPT	PART #
1/2"	262A02312
3/4"	262A02334
1"	262A0231

Devices rated for hazardous locations are not returnable.

Plug (male inlet w/handle) or Inlet w/Cap on Box (male)



or



North American Configurations

VOLTAGE	POLARITY	PART # METAL	PART # METAL
120 V	1P+N+G	2621165	2626165
125 V	1P+N+G	2621075	2626075
208 V	2P+G	2621162	2626162
208 V	3P+G	2621163	2626163
208 V	3P+N+G	2621167	2626167
250 V	2P+G	2621072	2626072
250 V	3P+G	2621073	2626073
250 V	2P+N+G	2621076	2626076
277 V	1P+N+G	2621045	2626045
480 V	2P+G	2621042	2626042
480 V	3P+G	2621043	2626043
480 V	3P+N+G	2621047	2626047
600 V	3P+G	2621143	2626143

For international configurations (IEC/CE) visit meltric.com/international-catalog or contact Customer Service at 800-433-7642.

Connector (female recept w/handle) or Receptacle on Box (female) or Receptacle (female)



or



or



North American Configurations

VOLTAGE	POLARITY	PART # METAL	PART # METAL	PART # METAL
120 V	1P+N+G	2623165	2620165	2624165
125 V	1P+N+G	2623075	2620075	2624075
208 V	2P+G	2623162	2620162	2624162
208 V	3P+G	2623163	2620163	2624163
208 V	3P+N+G	2623167	2620167	2624167
250 V	2P+G	2623072	2620072	2624072
250 V	3P+G	2623073	2620073	2624073
250 V	2P+N+G	2623076	2620076	2624076
277 V	1P+N+G	2623045	2620045	2624045
480 V	2P+G	2623042	2620042	2624042
480 V	3P+G	2623043	2620043	2624043
480 V	3P+N+G	2623047	2620047	2624047
600 V	3P+G	2623143	2620143	2624143

For international configurations (IEC/CE) visit meltric.com/international-catalog or contact Customer Service at 800-433-7642.

DX3 Hazardous Location - 32 A

Plug (male inlet w/handle)



or

Inlet w/Cap on Box (male)



Devices rated for hazardous locations are not returnable.

North American Configurations

VOLTAGE	POLARITY	PART # METAL	PART # METAL
120 V	1P+N+G	2631165	2636165
125 V	1P+N+G	2631075	2636075
208 V	2P+G	2631162	2636162
208 V	3P+G	2631163	2636163
208 V	3P+N+G	2631167	2636167
250 V	2P+G	2631072	2636072
250 V	3P+G	2631073	2636073
250 V	2P+N+G	2631076	2636076
277 V	1P+N+G	2631045	2636045
480 V	2P+G	2631042	2636042
480 V	3P+G	2631043	2636043
480 V	3P+N+G	2631047	2636047
600 V	3P+G	2631143	2636143

For international configurations (IEC/CE) visit meltric.com/international-catalog or contact Customer Service at 800-433-7642.

Connector (female recept w/handle)



or

Receptacle on Box (female)



or

Receptacle (female)



North American Configurations

VOLTAGE	POLARITY	PART # METAL	PART # METAL	PART # METAL
120 V	1P+N+G	2633165	2630165	2634165
125 V	1P+N+G	2633075	2630075	2634075
208 V	2P+G	2633162	2630162	2634162
208 V	3P+G	2633163	2630163	2634163
208 V	3P+N+G	2633167	2630167	2634167
250 V	2P+G	2633072	2630072	2634072
250 V	3P+G	2633073	2630073	2634073
250 V	2P+N+G	2633076	2630076	2634076
277 V	1P+N+G	2633045	2630045	2634045
480 V	2P+G	2633042	2630042	2634042
480 V	3P+G	2633043	2630043	2634043
480 V	3P+N+G	2633047	2630047	2634047
600 V	3P+G	2633143	2630143	2634143

For international configurations (IEC/CE) visit meltric.com/international-catalog or contact Customer Service at 800-433-7642.

Ratings

- **Max Amperage & Voltage**
  32 A, 750 VAC
- **Environmental Ratings**
  IP65
- **Temperature Range**
  Min -13°F / Max 140°F
  See pg 260 for temperatures outside this range.
- **Wiring Capacity**
  Based on THHN wire sizes.
  Min 14 AWG Max 8 AWG
- **Applicable Standards**
  ATEX, IECEx
- **Hazardous Location Ratings**

MARECHAL ELECTRIC MAROMME
II2 G/D Ex de IIC tD A21
-25°C ≤ Ta ≤ +60°C T5 T84°C
-25°C ≤ Ta ≤ +50°C T6 T74°C
IECEx LCI 09.0014/LCIE 05 ATEX 6127

Handle Cable Range

SUFFIX	CABLE RANGE SIZE
-20M	.31" - .51"
None	.35" - .63"
-32M	.47" - .83"

Box Size

SUFFIX	NPT THREAD SIZE
-12	1/2"
-34	3/4"
None	1"

NPT sizes are determined by the cable diameter and third party cord grip.

Accessories

PROTECTIVE CAP



For Male Devices Only

DX3	263A926

METAL WALL BOX



NPT	PART #
1/2"	263A02312
3/4"	263A02334
1"	263A0231

DX6 Hazardous Location - 63 A

Ratings

- **Max Amperage & Voltage**
  63 A, 750 VAC
- **Environmental Ratings**
  IP65/IP66
- **Temperature Range**
  Min -40°F/Max 140°F
  See pg 260 for temperatures outside this range.
- **Wiring Capacity**
  Based on THHN wire sizes.
  Min 6 AWG Max 1/0 AWG
- **Applicable Standards**
  ATEX, IECEx
- **Hazardous Location Ratings**

MARECHAL ELECTRIC MAROMME
II2 G/D Ex de IIC tD A21
-40°C ≤ Ta ≤ +60°C T5 T90°C
-40°C ≤ Ta ≤ +50°C T6 T80°C
IECEx LCI 09.0015/LCIE 04 ATEX 6038

Handle Cable Range

SUFFIX	CABLE RANGE SIZE
None	.47" - .83"
-40M	.63" - 1.06"
-50M	.91" - 1.38"
-63M	1.42 - 1.89"

Box Size

SUFFIX	NPT THREAD SIZE
-1	1"
None	1 1/4"
-112	1 1/2"
-2	2"

NPT sizes are determined by the cable diameter and third party cord grip.

Accessories

PROTECTIVE CAP



For Male Devices Only

DX6	266A926

METAL WALL BOX



NPT	PART #
1"	266A0231
1 1/4"	266A023114
1 1/2"	266A023112
2"	266A0232

Devices rated for hazardous locations are not returnable.

Plug (male inlet w/handle) or Inlet w/Cap on Box (male)



or



North American Configurations

VOLTAGE	POLARITY	PART # METAL	PART # METAL
120 V	1P+N+G	2661165	2666165
125 V	1P+N+G	2661075	2666075
208 V	2P+G	2661162	2666162
208 V	3P+G	2661163	2666163
208 V	3P+N+G	2661167	2666167
250 V	2P+G	2661072	2666072
250 V	3P+G	2661073	2666073
250 V	2P+N+G	2661076	2666076
277 V	1P+N+G	2661045	2666045
480 V	2P+G	2661042	2666042
480 V	3P+G	2661043	2666043
480 V	3P+N+G	2661047	2666047
600 V	3P+G	2661143	2666143

For international configurations (IEC/CE) visit meltric.com/international-catalog or contact Customer Service at 800-433-7642.

Connector (female recept w/handle) or Receptacle on Box (female) or Receptacle (female)



or



or



North American Configurations

VOLTAGE	POLARITY	PART # METAL	PART # METAL	PART # METAL
120 V	1P+N+G	2663165	2660165	2664165
125 V	1P+N+G	2663075	2660075	2664075
208 V	2P+G	2663162	2660162	2664162
208 V	3P+G	2663163	2660163	2664163
208 V	3P+N+G	2663167	2660167	2664167
250 V	2P+G	2663072	2660072	2664072
250 V	3P+G	2663073	2660073	2664073
250 V	2P+N+G	2663076	2660076	2664076
277 V	1P+N+G	2663045	2660045	2664045
480 V	2P+G	2663042	2660042	2664042
480 V	3P+G	2663043	2660043	2664043
480 V	3P+N+G	2663047	2660047	2664047
600 V	3P+G	2663143	2660143	2664143

For international configurations (IEC/CE) visit meltric.com/international-catalog or contact Customer Service at 800-433-7642.

DX9 Hazardous Location - 125 A

Plug
(male inlet w/handle)



or

Inlet w/Cap on Box
(male)



Devices rated for hazardous locations are not returnable.

North American Configurations

VOLTAGE	POLARITY	PART # METAL	PART # METAL
120 V	1P+N+G	2691165	2696165
125 V	1P+N+G	2691075	2696075
208 V	2P+G	2691162	2696162
208 V	3P+G	2691163	2696163
208 V	3P+N+G	2691167	2696167
250 V	2P+G	2691072	2696072
250 V	3P+G	2691073	2696073
250 V	2P+N+G	2691076	2696076
277 V	1P+N+G	2691045	2696045
480 V	2P+G	2691042	2696042
480 V	3P+G	2691043	2696043
480 V	3P+N+G	2691047	2696047
600 V	3P+G	2691143	2696143

For international configurations (IEC/CE) visit meltric.com/international-catalog or contact Customer Service at 800-433-7642.

Connector
(female recept w/handle)



or

Receptacle on Box
(female)



or

Receptacle
(female)



North American Configurations

VOLTAGE	POLARITY	PART # METAL	PART # METAL	PART # METAL
120 V	1P+N+G	2693165	2690165	2694165
125 V	1P+N+G	2693075	2690075	2694075
208 V	2P+G	2693162	2690162	2694162
208 V	3P+G	2693163	2690163	2694163
208 V	3P+N+G	2693167	2690167	2694167
250 V	2P+G	2693072	2690072	2694072
250 V	3P+G	2693073	2690073	2694073
250 V	2P+N+G	2693076	2690076	2694076
277 V	1P+N+G	2693045	2690045	2694045
480 V	2P+G	2693042	2690042	2694042
480 V	3P+G	2693043	2690043	2694043
480 V	3P+N+G	2693047	2690047	2694047
600 V	3P+G	2693143	2690143	2694143

For international configurations (IEC/CE) visit meltric.com/international-catalog or contact Customer Service at 800-433-7642.

Ratings

- **Max Amperage & Voltage**
  125 A, 750 VAC
- **Environmental Ratings**
  IP65/IP66
- **Temperature Range**
  Min -40°F/Max 140°F
  See pg 260 for temperatures outside this range.
- **Wiring Capacity**
  Based on THHN wire sizes.
  Min 2 AWG Max 2/0 AWG
- **Applicable Standards**
  ATEX, IECEx
- **Hazardous Location Ratings**

MARECHAL ELECTRIC MAROMME
II2 G/D Ex de IIC tD A21
-40°C ≤ Ta ≤ +60°C T5 T90°C
-40°C ≤ Ta ≤ +50°C T6 T80°C
IECEx LCI 09.0015/LCIE 04 ATEX 6038

Handle Cable Range

SUFFIX	CABLE RANGE SIZE
-32M	.47" - .83"
None	.63" - .1.06"
-50M	.91" - 1.38"
-63M	1.42" - 1.89"

Box Size

SUFFIX	NPT THREAD SIZE
-1	1"
None	1 1/4"
-112	1 1/2"
-2	2"

NPT sizes are determined by the cable diameter and third party cord grip.

Accessories

PROTECTIVE CAP



For Male Devices Only

DX9	269A926

METAL WALL BOX



NPT	PART #
1"	269A0231
1 1/4"	269A023114
1 1/2"	269A023112
2"	269A0232

DX DIMENSIONS – Provided in Inches

SCAN ME >>

Dimensions are for reference only and may change depending on accessories used. For precise dimensions contact MELTRIC Engineering.

Plug

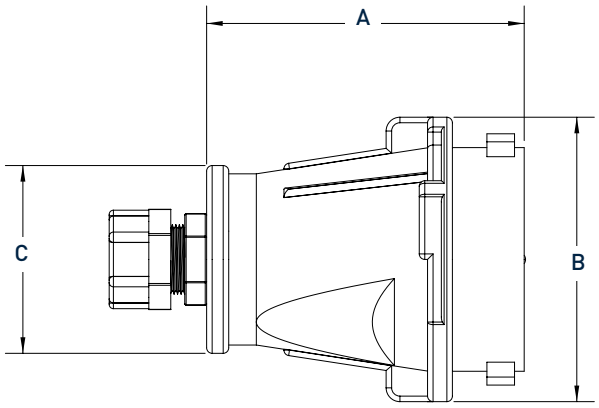

PRODUCT	A	B	C
DX1/DX3	4.53	4.06	2.68
DX6/DX9	8.66	5.75	3.94

Receptacle

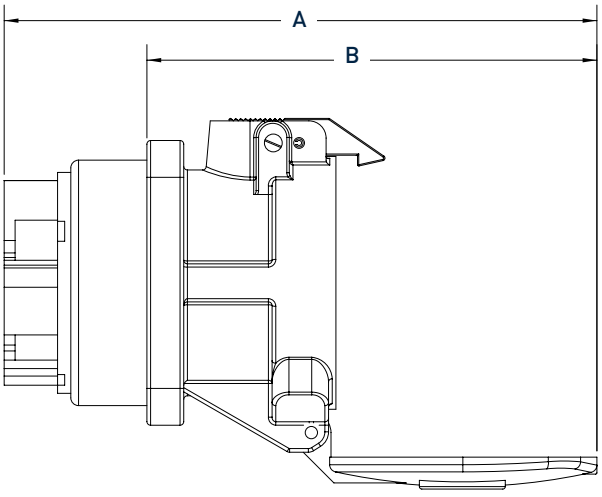

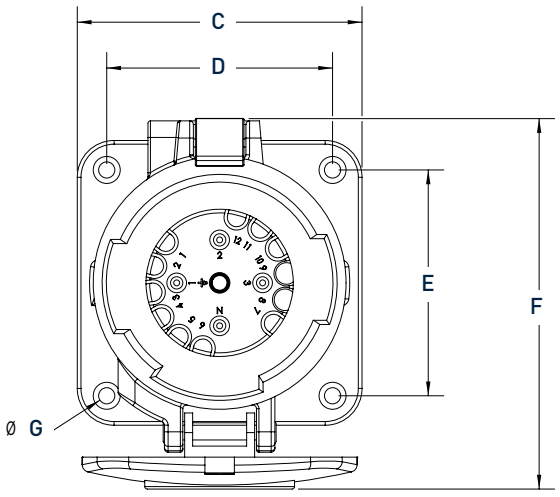

PRODUCT	A	B	C	D	E	F	øG
DX1/DX3	9.51	7.22	4.57	3.62	3.62	5.94	0.26
DX6/DX9	15.30	11.67	6.30	4.80	4.80	7.95	0.35

Wall Box/Receptacle/Plug

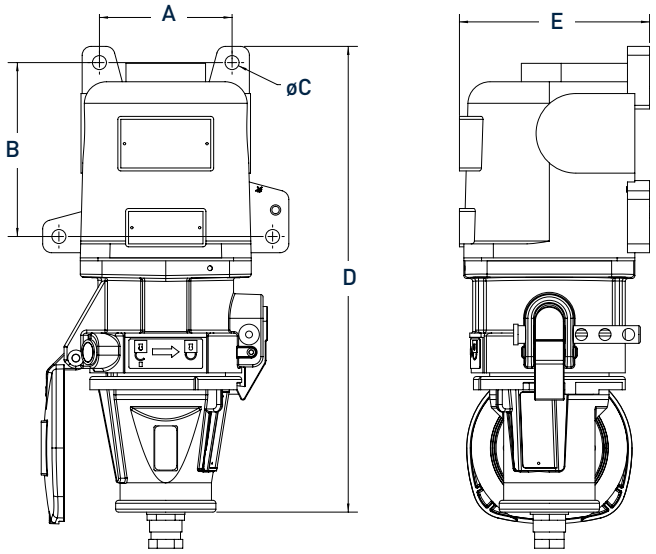

PRODUCT	A	B	øC	D	E
DX1/DX3	3.54	4.65	0.37	12.44	5.08
DX6/DX9	5.12	6.81	0.39	19.06	6.50

Plug/Connector

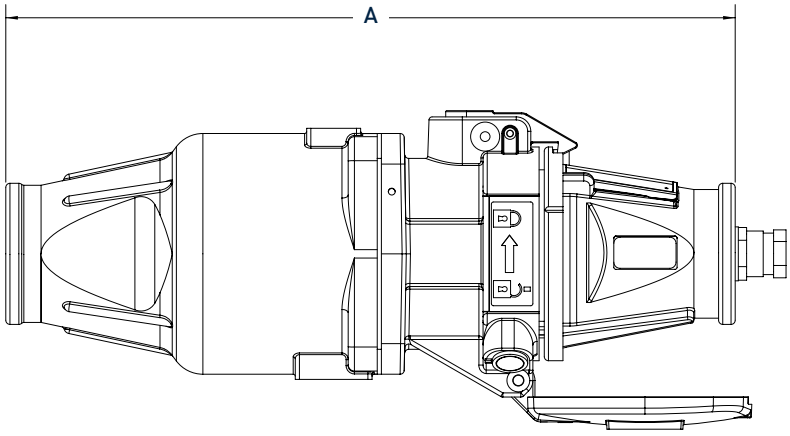

PRODUCT	A
DX1/DX3	13.84
DX6/DX9	21.14

PNCX Low Power

PRODUCT FEATURES



Durable Casing

Glass reinforced thermoplastic casing provides IK08 impact protection.

Spring-Loaded Butt-Style Contacts

Ensures optimal contact force and superior electrical performance over thousands of operations.

Integral Cord Grips

Strain relief and ingress protection for cables from .40" to .55".

Silver-Nickel Contacts

Silver-nickel material provides superior conductivity, durability, and corrosion resistance. Suitable for 4-20 mA signals and up to 5 A power circuits.

Protective Cap

Allows IP66/67/69 ratings to be maintained when the device is disconnected.

Hazardous Location Listings

ATEX/IECEX
Ex II2 G D Ex e IIC T6 Gb Ex tb IIIC T72˚C Db Suitable for Zone 1 and Zone 2 for Gases with autoignition temperatures < 85˚ C Suitable for Zone 21 and Zone 22 for Dusts with autoignition temperatures < 72˚ C
-20°C ≤ Ta ≤ +70°C Applicable ambient temperature range
IECEx LCIE 16.0001X/LCIE 16 ATEX 3001X

How It Works

Connector and Plug Disconnected

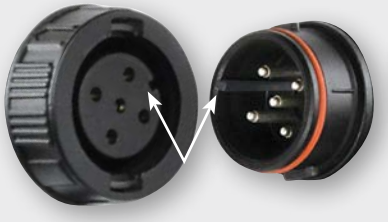

Align keying rib on plug with slot on receptacle

Insertion of Plug



Insert plug into receptacle

Rotation of Ring



Rotate ring 40° to lock device together and engage water and dust ingress protection

HAZARDOUS LOCATION - MULTIPIN

Devices rated for hazardous locations are not returnable.

Connector or Receptacle



or



VOLTAGE	POLARITY	CABLE RANGE	PART # POLY	PART # POLY
250 V	4P+G	.40-.55"	06E3007	06E4007

For international configurations (IEC/CE) visit meltric.com/international-catalog or contact Customer Service at 800-433-7642.

Plug or Inlet



or



VOLTAGE	POLARITY	CABLE RANGE	PART # Poly	PART # POLY
250 V	4P+G	.40-.55"	06E1007	06E8007

For international configurations (IEC/CE) visit meltric.com/international-catalog or contact Customer Service at 800-433-7642.

Ratings

- **Voltage**
  250 VAC, 250 VDC
- **Amperage Ratings**
  4-20 mA to 5 A
  Not for current interrupting
- **Environmental Ratings**
  IP66/IP67/IP69
- **Temperature Range**
  Min -4°F / Max 158°F
- **Wiring Capacity**
  Based on THHN wire sizes
  Min 18 AWG Max 12 AWG
- **Terminal Type**
  Screw
- **Applicable Standards**
  ATEX, IECEx

ACCESSORIES

ADAPTER PLATE For DXN20 Accessories (see page 172).	PROTECTIVE CAP (if replacement is required)			
	251A457-E		Receptacle 01EA125	 Inlet 01EA126

DIMENSIONS – Provided in Inches

SCAN ME >>

Dimensions are for reference only and may change depending on accessories used. For precise dimensions contact MELTRIC Engineering.

Panel Mount Receptacle

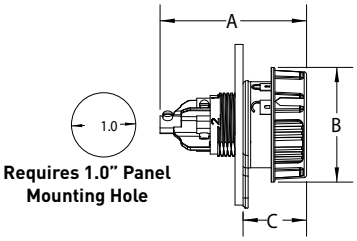

PRODUCT	A	B	C
PNCX	2.28	1.78	.99

Connected Plug and Receptacle

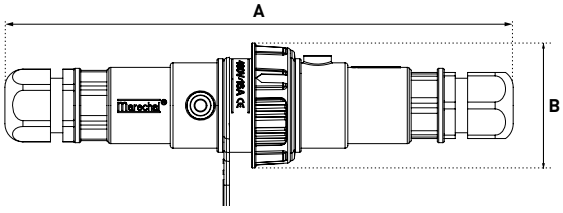

PRODUCT	A	B
PNCX	7.28	1.78



MULTIPIN
Plugs & Receptacles

Multipin plugs and receptacles rated for hazardous environments. Industrial duty casings withstand harsh environments and rough handling.



PXN12c MULTIPIN CONNECTORS P. 211

- ATEX rated
- Up to 12 contacts
- Compact design
- Crimp or solder terminals



DXN25c MULTIPIN CONNECTORS P. 213

- ATEX rated
- Up to 25 contacts
- Corrosion-free metal casing
- Crimp or solder terminals



DXN37c MULTIPIN CONNECTORS P. 213

- ATEX rated
- Up to 37 contacts
- Corrosion-free metal casing
- Crimp or solder terminals



HAZARDOUS LOCATION

PXN12c Multipin

PRODUCT FEATURES



Recessed Contacts

Provides IP2X protection from live electrical parts.

Locking Provision

Turn screw with special tool (provided) to prevent plug removal.

Spring-Loaded Butt-Style Contacts

Ensures optimal contact force and superior electrical performance over thousands of operations.

Metal Casing

Provides excellent durability and protection.

IP65/IP66 Watertightness

Environmental rating is achieved as soon as the plug is latched to the receptacle. There are no additional rings to tighten.



Lid

Provides additional protection from harsh environments.

Silver-Nickel Contacts

Silver-nickel contact material provides superior conductivity, durability and corrosion resistance.

Hazardous Location Listings

ATEX
Ex II 2 G D Ex e IIC T5 Gb Ex tb IIIC T69°C Db Suitable for Zone 1 & 2 (gas) 21 & 22 (dust)
-40°C ≤ Ta ≤ +55°C T5 T69°C
II 2 G D Ex ia/ib IIC Gb
IECEx LCIE 14.0041X/LCIE 07 ATEX 6070X

NOM listing available. Contact MELTRIC Engineering for more information.

Highlighted Feature

- **Crimped Contacts**
  PXN12c devices now feature contacts that can be crimped or soldered. Each device is supplied with 13 contacts so that the product can be set up to suit application needs.

Simple Assembly and Disassembly

DSN37c shown

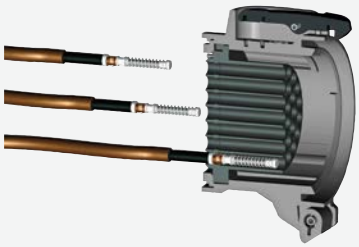

Assembly

To insert contacts when they have been wired is simple. Push wired contact into rear of insulator until it stops to complete the installation.



Disassembly

To remove, use the tool provided.
Push tool from front onto contact until tool stops.
Contact is then released at rear of insulator.

HAZARDOUS LOCATION

Devices rated for hazardous locations are not returnable.

Connector (female receptacle with handle) / Receptacle/Angle (female) / Receptacle/Angle/Box (female)


or

or


VOLTAGE	POLARITY	CABLE RANGE	PART # METAL	PART # METAL	PART # METAL
220 V	11P+G	.350-.630"	06A300125M	06A7001	06A000125M
220 V	11P+G	.470-.820"	06A3001	06A7001	06A0001

For international configurations (IEC/CE) visit meltric.com/international-catalog or contact Customer Service at 800-433-7642.

Plug (male inlet w/handle) / Inlet/Angle (male) / Inlet/Angle/Box (male)


or

or


VOLTAGE	POLARITY	CABLE RANGE	PART # METAL	PART # METAL	PART # METAL
220 V	11P+G	.350-.630"	06A100125M	06A9001	06A600125M
220 V	11P+G	.470-.820"	06A1001	06A9001	06A6001

For international configurations (IEC/CE) visit meltric.com/international-catalog or contact Customer Service at 800-433-7642.

Ratings

- **Voltage**
  220 VAC or VDC
- **Amperage Ratings**
  10 A not for disconnection of a live circuit.
- **Current Interruption Capacity**
  Not for current interrupting
- **Environmental Ratings**
  IP65/IP66
- **Temperature Range**
  Min -40°F / Max 131°F
  See pg 260 for temperatures outside this range.
- **Wiring Capacity**
  Based on THHN wiring connection type solder.
  Min 16 AWG Max 14 AWG
- **Terminal Type**
  Solder/Crimp
- **Applicable Standards**
  ATEX, IECEx

ACCESSORIES

PROTECTIVE INLET/PLUG CAP		01-NA426	EUROPEAN CRIMPING TOOL		61CA500
MULTI-CONTACT REMOVAL TOOL		61-CA593	CRIMPER TOOL (Greenlee or equal)		4CN30

BAG OF 13 FEMALE CONTACTS			
	01AA213	Includes insulation sleeves and ferrules
BAG OF 13 MALE CONTACTS			
	01AA113	Includes insulation sleeves and ferrules

DIMENSIONS – Provided in Inches

Dimensions are for reference only and may change depending on accessories used. For precise dimensions contact MELTRIC Engineering.

SCAN ME >>

Plug

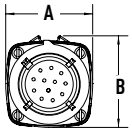

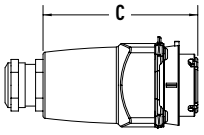

Wall Box/Angle/Receptacle/Plug

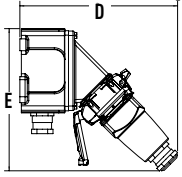

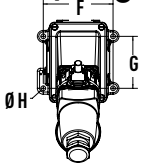

PRODUCT	A	B	C	D	E	F	G	øH
PXN12c	2.3	2.42	4.09	8.37	7.54	3.7	2.76	.26

DXN25c/DXN37c

PRODUCT FEATURES



Locking Provision

For insertion of locking pin (or padlock) to prevent inadvertent disconnection.

Spring-Loaded Butt-Style Contacts

Ensures optimal contact force and superior electrical performance over thousands of operations.

Recessed Contacts

Provides IP2X protection from live electrical parts.

Metal Casing

Provides excellent durability and protection.

Lid

Provides additional protection from harsh environments.

Silver-Nickel Contacts

Silver-nickel contact material provides superior conductivity, durability and corrosion resistance.

IP66/IP67 Watertightness

Environmental rating is achieved as soon as the plug is latched to the receptacle. There is no additional ring to tighten.

Hazardous Location Listings

ATEX			
Ex II 2 GD Ex e IIC Gb Ex tb IIIC Db Suitable for Zone 1 & 2 (gas) 21 & 22 (dust)			
Ex ia or ib IIC T6 Gb			
DXN25c	-40°C ≤ Ta ≤ +60°C	T5	T71°C
	-40°C ≤ Ta ≤ +40°C	T6	T51°C
	IECEx LCIE 14.0040X/LCIE 09 ATEX 3050X		
DXN37c	-40°C ≤ Ta ≤ +55°C	T5	T76°C
	-40°C ≤ Ta ≤ +40°C	T6	T56°C
	IECEx LCIE 14.0038X/LCIE 07 ATEX 6071X		

NOM listing available.
Contact Engineering for more information.

Highlighted Feature

- **Crimped Contacts**
  DXN25c / DXN37c devices now feature contacts that can be crimped or soldered. Each device is supplied with 26 or 39 contacts so that the product can be set up to suit application needs.

Simple Assembly and Disassembly

DXN37c shown

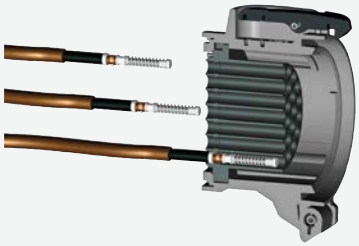

Assembly

To insert contacts when they have been wired is simple. Push wired contact into rear of insulator until it stops to complete the installation.



Disassembly

To remove, use the tool provided.
Push tool from front onto contact until tool stops.
Contact is then released at rear of insulator.

HAZARDOUS LOCATION - MULTIPIN

Devices rated for hazardous locations are not returnable.

Connector (female receptacle with handle) or Receptacle/Angle (female) or Receptacle/Angle/Box (female)



Voltage	Polarity	Cable Range	Part # Metal	Part # Metal	Part # Metal
440 V	24P+G	.500-.830"	36D300232M	36D7002	36D000232M
440 V	24P+G	.630-1.050"	36D3002	36D7002	36D0002
220 V	36P+G	.500-.830"	36C300332M	36C7003	36C000332M
220 V	36P+G	.630-1.050"	36C3003	36C7003	36C0003

For international configurations (IEC/CE) visit meltric.com/international-catalog or contact Customer Service at 800-433-7642.

Plug (male inlet w/handle) or Inlet/Angle (male) or Inlet/Angle/Box (male)



Voltage	Polarity	Cable Range	Part # Metal	Part # Metal	Part # Metal
440 V	24P+G	.500-.830"	36D100232M	36D9002	36D600232M
440 V	24P+G	.630-1.050"	36D1002	36D9002	36D6002
220 V	36P+G	.500-.830"	36C100332M	36C9003	36C600332M
220 V	36P+G	.630-1.050"	36C1003	36C9003	36C6003

For international configurations (IEC/CE) visit meltric.com/international-catalog or contact Customer Service at 800-433-7642.

Ratings

- **Voltage**
  440 VAC or VDC DXN25c
  230 VAC or VDC DXN37c
- **Amperage Ratings**
  10 A DXN25c
  Not for current interrupting.
  10 A DXN37c
  Not for current interrupting.
- **Environmental Ratings**
  IP66/IP67
- **Temperature Range**
  Min -15°F/Max 140°F – (DXN25c)
  Min -40°F/Max 131°F – (DXN37c)
  See pg 260 for temperatures outside this range.
- **Wiring Capacity**
  Based on THHN wiring connection type solder.
  Min 16 AWG Max 14 AWG
- **Terminal Type**
  DXN25c: Solder/Crimp
  DXN37c: Solder/Crimp
- **Applicable Standards**
  ATEX, IECEx

ACCESSORIES

MULTI-CONTACT REMOVAL TOOL	EUROPEAN CRIMPING TOOL	BAG OF 13 FEMALE CONTACTS
 61-CA593	 61CA500	 01AA213 — Includes insulation sleeves and ferrules
PLUG CAP	**CRIMPER TOOL (Greenlee or equal)**	**BAG OF 13 MALE CONTACTS**
 31-3A426	 4CN30	 61CA113 — Includes insulation sleeves and ferrules

DIMENSIONS – Provided in Inches

Dimensions are for reference only and may change depending on accessories used. For precise dimensions contact MELTRIC Engineering.

SCAN ME >>

Plug

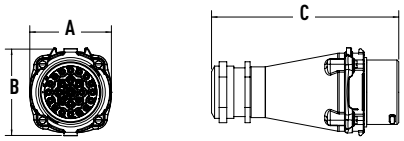

Wall Box/Angle/ Receptacle/Plug

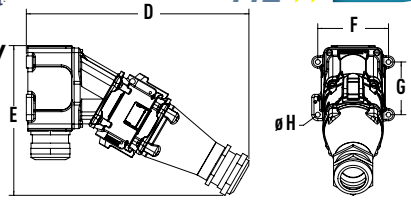

PRODUCT	A	B	C	D	E	F	G	øH
DXN25C/DXN37C	3.17	3.35	7.26	11.64	7.83	3.70	2.76	0.26

SPeX
Hazardous Location





Main Advantages

- Mechanical keying system prevents intermating of phases
- Reliable mechanical and electrical interlocking
- Automatic IP65/IP66 when plug is mated

- Features and Ratings p. 216
- SPeX p. 217
- Dimensions p. 218

SCAN ME >>

PRODUCT FEATURES

Hazardous location rating is based on mandatory use of pilot circuit to make and break load on phase contacts.



Drawbar
Assists with mating devices.

Mechanical/Electrical Interlock
Twist ring closes/opens the pilot circuit and locks/unlocks the latching mechanism which works with a breaker to prevent connection or disconnection under load.

Pilot Connections
Integral pilot circuit for controlling the power circuit.

Phase Label
Indicates phase of receptacle.

Latch Release Button
Enables disconnection of the plug from the receptacle.

Protective Caps
Protect contacts when disconnected.

Silver Contact Material
Enables maximum performance and durability – withstands at least 2000 operations.

Color Coding
Enables quick visual identification of matching plugs/receptacles.

Hazardous Location Listings (CSA or ATEX)

CSA	ATEX
Class I, Division 2, Group ABCD	Ex II2 G D Ex e IIC T* Gb Ex tb IIIC Db IP65/IP66 Suitable for Zone 1 & 2 (gas) 21 & 22 (dust)
Class II, Division 1 Groups EFG; Class III, Division 1	
Ex e IIC; Ex tb IIIC T56°C or T76°: IP66 (For Canada)	-20°C ≤ Ta ≤ 40°C T5 T56°C
Class I, Zone 1, AEx e IIC T5 or T6	-20°C ≤ Ta ≤ 60°C T5 T76°C
AEx tb IIIC T56°C or T76°C	-20°C ≤ Ta ≤ 40°C T6 T56°C
IP65/IP66 (For US)	-20°C ≤ Ta ≤ +60°C T4 T79°C

NOM listing available. Contact MELTRIC Engineering for more information.

Amperage Ratings by Cable Size and ATEX Rating

	-20°C ≤ TA ≤ 40°C G/D T5/T56°C	-20°C ≤ TA ≤ 40°C G/D T6/T56°C	-20°C ≤ TA ≤ 60°C G/D T5/T76°C
70mm²	290 A	235 A	235 A
95mm²	415 A	335 A	335 A
120mm²	456 A	376 A	376 A
150mm²	493 A	415 A	415 A
185mm²	530 A	450 A	450 A
240mm²	570 A	497 A	497 A
300mm²	620 A	540 A	540 A
400mm²	680 A	600 A	600 A

Operating Instructions



To connect, insert the plug into the receptacle until a click is heard. Rotation of the plug in either direction engages a locking finger, which prevents further rotation.



To close the pilot circuit and mechanically lock the plug into the receptacle, turn the ring on the receptacle until the "1" lines up with the arrow. This turns the power on.



To disconnect, open the pilot circuit and unlock the plug by turning the ring until the "0" is aligned with the arrow. The power is now off.



Press firmly on the latch release button and simultaneously pull on the inlet. A slight rotation of the plug may also be required.

SPeX Hazardous Location

cCSAus Ratings

- **Voltage**
  600 VAC
- **Current Interruption Capacity**
  Not for Current Interrupting
- **Amperage Ratings**
  600 A
- **Environmental Ratings**
  IP65/IP66
- **Temperature Range**
  See table page 260
- **Wiring Capacity**
  Min 2/0 AWG Max 750 MCM
  Aux Contacts: 12-14 AWG
  See table page 237
- **Applicable Standards**
  CSA C22.2 No. 182.1,
  CSA 213-M1987, CSA 25-1966

  Note: Ratings apply to AC only

Devices rated for hazardous locations are not returnable.

Plug
(male inlet w/handle)



Receptacle on Angle
(female)



North American cCSAus Configurations

COLOR CODE	POLARITY	PART # WITHOUT LUG (BY CABLE DIAMETER) .700-.980"	.960-1.330"	1.330-1.650"	1.570-1.890"	PART # WITHOUT LUG
	L1	42-41001-32P	42-41001-40P	42-41001-50P	42-41001-63P	42-47001
	L2	42-41002-32P	42-41002-40P	42-41002-50P	42-41002-63P	42-47002
	L3	42-41003-32P	42-41003-40P	42-41003-50P	42-41003-63P	42-47003
	NEUTRAL	42-4100N-32P	42-4100N-40P	42-4100N-50P	42-4100N-63P	42-4700N
	GROUND	42-4100T-32P	42-4100T-40P	42-4100T-50P	42-4100T-63P	42-4700T
	POSTIVE	42-4100P-32P	42-4100P-40P	42-4100P-50P	42-4100P-63P	42-4700P
	NEGATIVE	42-4100M-32P	42-4100M-40P	42-4100M-50P	42-4100M-63P	42-4700M

IEC/CE Ratings

- **Voltage**
  1000 VAC, 1500 VDC
- **Amperage Ratings**
  See table page 237
- **Environmental Ratings**
  IP65/IP66
- **Temperature Range**
  See table page 260
- **Wiring Capacity**
  Min 2/0 AWG Max 750 MCM
  Aux Contact: 12-14 AWG
  See table page 237
- **Applicable Standards**
  ATEX, IECEx

Plug
(male inlet w/handle)



Receptacle on Angle
(female)



IEC/CE Configurations

COLOR CODE	POLARITY	PART # WITHOUT LUG (BY CABLE DIAMETER) .70 - .98"	.94 - 1.33"	1.33 - 1.65"	1.57 - 1.89"	PART # WITHOUT LUG
	L1	464100132P	464100140P	464100150P	464100163P	4647001
	L2	464100232P	464100240P	464100250P	464100263P	4647002
	L3	464100332P	464100340P	464100350P	464100363P	4647003
	NEUTRAL	464100N32P	464100N40P	464100N50P	464100N63P	464700N
	GROUND	464100T32P	464100T40P	464100T50P	464100T63P	464700T
	POSITIVE	464100P32P	464100P40P	464100P50P	464100P63P	464700P
	NEGATIVE	464100M32P	464100M40P	464100M50P	464100M63P	464700M

INSTALLATION ACCESSORIES

Accessories rated for hazardous locations are not returnable.

CRIMPING LUGS

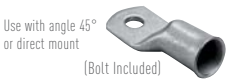



INTERNAL DIAMETER		STRAIGHT w/TERMINAL	STRAIGHT THREADED	FLEXIBLE WIRING*	COARSE WIRING
in	mm	PART #	PART #	AWG	AWG
.43	11	**454A50C**	**454A50D**	1/0	2/0
.51	13.1	**454A70C**	**454A70D**	2/0, 3/0	3/0, 4/0
.57	14.5	**454A95C**	**454A95D**	4/0	250
.64	16.2	**454A12C**	**454A12D**	262	300
.71	18	**454A15C**	**454A15D**	300, 313	350
.81	20.6	**454A18C**	**454A18D**	350*, 373	400, 500
.91	23.1	**454A24C**	**454A24D**	444*, 500, 535	600
1.03	26.1	**454A30C**	**454A30D**	646	750
1.15	29.2	**454A40C**	**454A40D**	750, 777*	800

Notes: * Class H & I UL Listing performed with Greenlee EK6IDL11 dieless tool and Dewalt DCE300M2 with Greenlee KC12 dies. *Only for use with Greenlee EK6ID11 dieless tool.

ACCESSORIES

DRAWBAR	PART #
	**454A376**

Dimensions Inlet/Receptacle – Provided in Inches

Dimensions are for reference only and may change depending on accessories used. For precise dimensions contact MELTRIC Engineering.

SCAN ME >>

Inlet

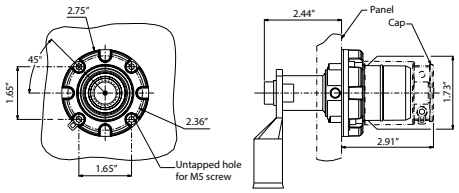

Receptacle

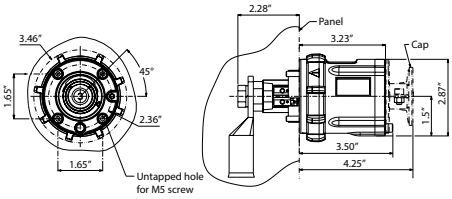

Plug

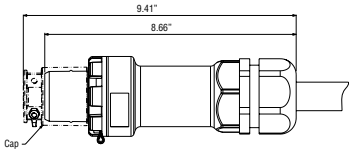

Connector

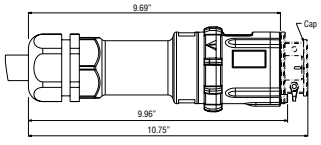

Plug/Connector

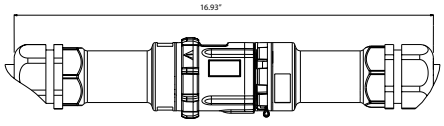

Plug with Connector On/Off

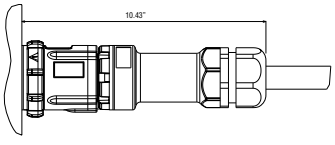

Connector with Plug On/Off

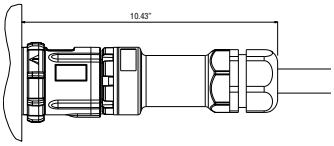

45° Inclined Receptacle/Angle with Plug

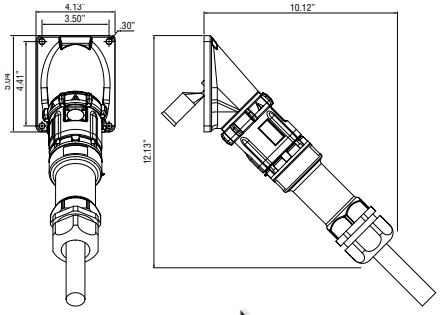

45° Inclined Inlet/Angle with Connector

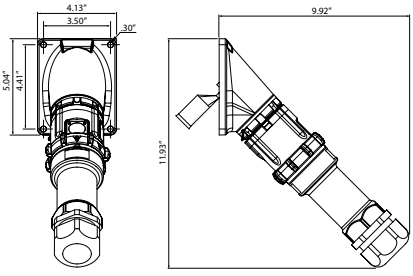

Visit meltric.com to view and download detailed SP drawing files.



TECHNOR ITALSMEA
A COMPANY OF MARECHAL ELECTRIC

SB Series

316L Stainless Steel Enclosures

- Meets ATEX and IECEx standards for use in explosive environments. Meets UL standard for use as an industrial control panel (non-hazardous).
- Over 20 standard sizes available
- Custom sizes can be ordered ranging from 100mm x 120mm x 100mm thru 910mm x 1140mm x 500mm
- Can be ordered empty or as a complete customized control panel per customer specifications.

Technical Features

- **Box material:** Stainless steel AISI 316L, 1.5 mm thickness
- **Surface treatment:** Acid treatment
- **Gaskets:** Silicon rubber (suitable for use between -70°C/+200°C)
- **Environmental Rating:** IP66/IP67, Type 1, 4, 4X, 12
- **Shock resistance:** IK10
- **Ambient Temperature:** From -50°C to +60°C (ATEX), From -50°C to +95°C (IECEx) From -40°C to +40°C (UL)
- **Approvals:** cULus: file UL E488994ATEX: IMQ 08 ATEX 028X and IMQ 16 ATEX 004 U
  IECEx: IECEx IMQ 15.0002X and IECEX IMQ 15.0010U
  EAC: TR CU 05.B.01093
- **ATEX/IECEx Marking:**
  CE Ex II 2 GD
  Ex e IIC T(**) Gb / Ex ia IIC T(**) Gb / Ex ib IIC T(**) Gb
  Ex tb IIIC T(**) Db IP66/67
  ** T6/T85°C, T5/T100°C, T4/T135°C
- **Compliance:** IECEx / ATEX: IEC/EN : 60079-0 / 60079-1 / 60079-7 / 60079-11 / 60079-18 / 60079-31
  UL: UL 508A and CSA C22.2 No. 14-13
- **Standard certificate label:** Self adhesive UV and corrosion resistant polyester
- **Entries:** Up to 80 mm diameter

Key Options Available

- Entries – added as needed
- Hinges – optional without
- Doors – optional locked
- Side gland plates
- Other options:
  - Breather drains
  - Viewing windows
  - Ground studs
  - Internal mounting plates
  - Acrylic laminated or stainless steel tag & certification labels
  - Other material thickness available
  - Electro polishing

SB Series 316L Stainless Steel Enclosure

Devices rated for hazardous locations are not returnable.

PART NUMBER	DIMENSIONS (mm)*					MAXIMUM CABLE ENTRIES W/O GLAND PLATE		MAXIMUM CABLE ENTRIES W/GLAND PLATE		MAX N° TERMINALS		WEIGHT (KG)
	A	B	C	D	E	SIDE A	SIDE B	SIDE A	SIDE B	2,5 MM²	4 MM²	
SB-101210**	100	120	100	150	–	4	4	–	–	7	6	1.5
SB-151510**	150	150	100	180	–	6	6	–	–	13	11	2.5
SB-202010	200	200	100	230	160	9	9	–	–	22	19	3.0
SB-202016	200	200	160	230	160	15	15	8	8	22	19	3.5
SB-204016	200	400	160	230	360	15	30	8	18	66	57	4.8
SB-282816	280	280	160	310	240	21	21	12	12	76	64	5.2
SB-282827	280	280	270	310	240	46	46	33	33	76	64	7.5
SB-302016	300	200	160	330	160	21	15	12	8	44	38	5.0
SB-383816	380	380	160	410	340	30	30	18	18	114	96	8.1
SB-383827	380	380	270	410	340	67	67	51	51	114	96	10.1
SB-384516	380	450	160	410	410	30	36	18	20	171	144	10.7
SB-385716	380	570	160	410	530	30	45	18	28	228	192	16.4
SB-575716	570	570	160	600	530	45	45	28	28	372	312	16.4
SB-575730	570	570	300	600	530	116	116	95	95	372	312	21.4
SB-577620	570	760	200	600	720	73	98	54	74	558	468	21.7
SB-769520	760	950	200	790	910	98	125	74	94	990	834	32.9
SB-272713	270	270	130	300	230	14	14	6	6	36	30	4.5
SB-353516	350	350	160	380	310	27	27	16	16	102	86	5.6
SB-142013	140	200	130	170	160	6	10	2	4	11	9	4.0
SB-202713	200	270	130	230	230	10	14	4	6	36	30	7.0
SB-273513	270	350	130	300	310	14	18	6	8	72	60	9.5
SB-355016	350	500	160	380	460	27	39	16	24	160	134	13.0
SB-505016	500	500	160	530	460	39	39	24	24	240	201	14.5

* Upon request, any dimension between 100x120x100 and 910x1140x500 can be manufactured.
** The enclosure is only available without hinges.

Dimensions – Provided in mm

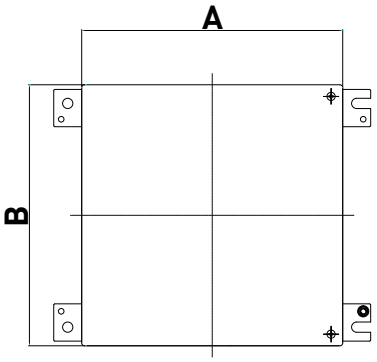

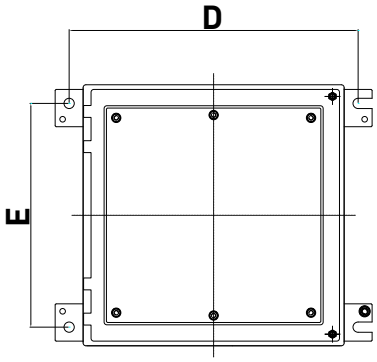

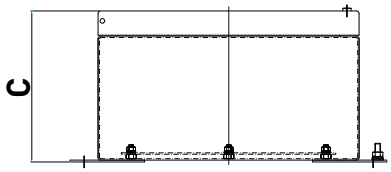



POWER DISTRIBUTION

MELTRIC Switch-Rated plugs and receptacles can help increase efficiency, lower maintenance costs, and deliver power when and where you need it most. Safely and quickly connect and disconnect electrical equipment using MELTRIC plugs and receptacles and relocate power supply systems and generators where you need them. MELTRIC devices can also be engineered to be included in a custom power solution.



CUSTOM WIDE VARIETY OF PLATFORMS & FEATURES P. 223

- Custom engineered
- Featuring Switch-Rated plugs and receptacles
- Poly or metal casings



RUBBER BOX PORTABLE RUBBER BOX PLATFORM P. 225

- Standard or custom configurations
- One, two, or three tier rubber boxes
- Featuring Switch-Rated plugs and receptacles



SAFETY SWITCHES FOR ADDED PROTECTION P. 227

- 30 A to 200 A series
- Heavy-duty, single throw, fusible or non-fusible safety switch
- Switch-Rated receptacles mounted and wired to disconnect switch



CUSTOM
Power Distribution



Custom power solutions from MELTRIC provide the Switch-Rated safety and durability of MELTRIC Switch-Rated plugs and receptacles in a power distribution package built specifically to customer needs. Whether you require power distribution in a vertical stand configuration, a low profile horizontal configuration, a custom configuration, or as a cordset, MELTRIC's engineering team can build a package to meet your needs.

Available Features

- Color-Coded Enclosures
- Phase Indication
- Stainless Steel Enclosures
- 120 V Convenience Outlet
- Rain Hoods
- Timers
- Pilot Circuits
- Wheel Kits
- Shunt Trips
- Under Voltage Trips
- Lifting Provisions
- Power Transformers

COMMON PLATFORMS



Custom Panel Solutions

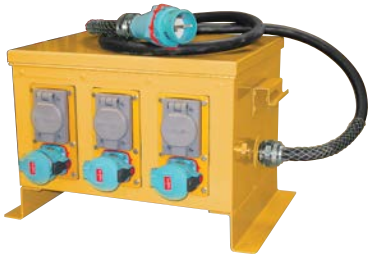

Multigang Power

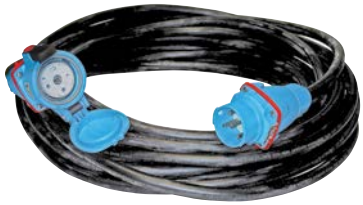

Cable Assembly



Breaker Plate Assembly



SB Enclosures



Rubber Box



Safety Switch

If you don't see what you are looking for, call MELTRIC @ 800-433-7642.

Rubber Boxes

Power Distribution

UL Type 3R Enclosures



1 Tier



2 Tier



3 Tier

Contact MELTRIC® at 800-433-7642 or engineering@meltric.com to review input and output configuration options.

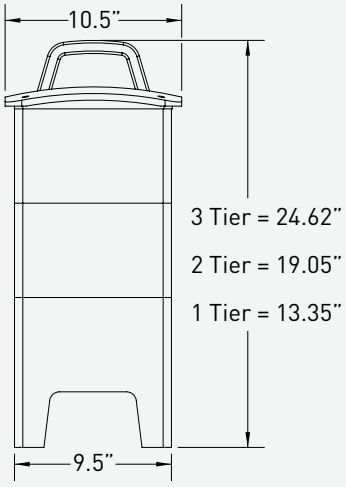

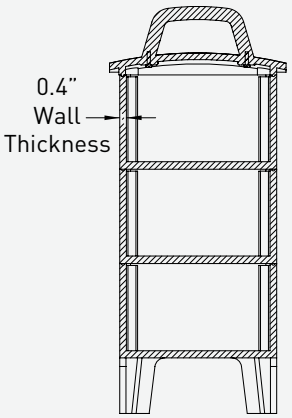

Cross-Section of Enclosure

Power input up to 100 A, 480 VAC. Choose a mounted inlet or a cord and plug.



Mounted Inlet



Cord and Plug

Power Receptacles



Room for (2) DSN60 (or smaller) receptacles per side per tier.

Circuit Protection



Room for up to (10) poles of standard MCB's (mini circuit breakers) per tier.
Note: *All configurations use UL489 circuit breakers except 60 A at 480 VAC, which comes with UL1077 breakers.*

Convenience Outlets



Room for (2) Type 5-20R duplex receptacles per side per tier or choose other convenience outlets.

RUBBER POWER DISTRIBUTION BOXES

Note: Some configurations shown require sharing of circuit protection devices.

Single Tier Potential Configuration



Side 1

(2) DSN Receptacles



Side 2

(2) 3 Pole MCB's



Side 3

(2) DSN Receptacles



Side 4

(1) Inlet

Double Tier Potential Configuration



Side 1

(1) DSN 20 A Receptacle

(1) DSN 30 A Receptacle

(1) DSN 60 A Receptacle



Side 2

(2) 20 A 3 Pole MCB's

(2) 30 A 3 Pole MCB's

(2) 60 A 3 Pole MCB's

(2) 20 A 1 Pole MCB's



Side 3

(1) DSN 20 A Receptacle

(1) DSN 30 A Receptacle

(1) DSN 60 A Receptacle



Side 4

(2) 20 A Type 5-20 Duplex GFCI

(1) DSN100 100 A Inlet

Triple Tier Potential Configuration



Side 1

(1) 20 A Type 5-20 Duplex GFCI

(2) DSN 20 A Receptacles

(2) DSN 30 A Receptacles



Side 2

(6) 20 A 1 Pole MCB's

(4) 20 A 3 Pole MCB's

(4) 30 A 3 Pole MCB's



Side 3

(1) 20 A Type 5-20 Duplex GFCI

(2) DSN 20 A Receptacles

(2) DSN 30 A Receptacles



Side 4

(2) 20 A Type 5-20 Duplex GFCI

(2) 20 A Type 5-20 Duplex GFCI

(1) DSN100 100 A Inlet

Disconnects



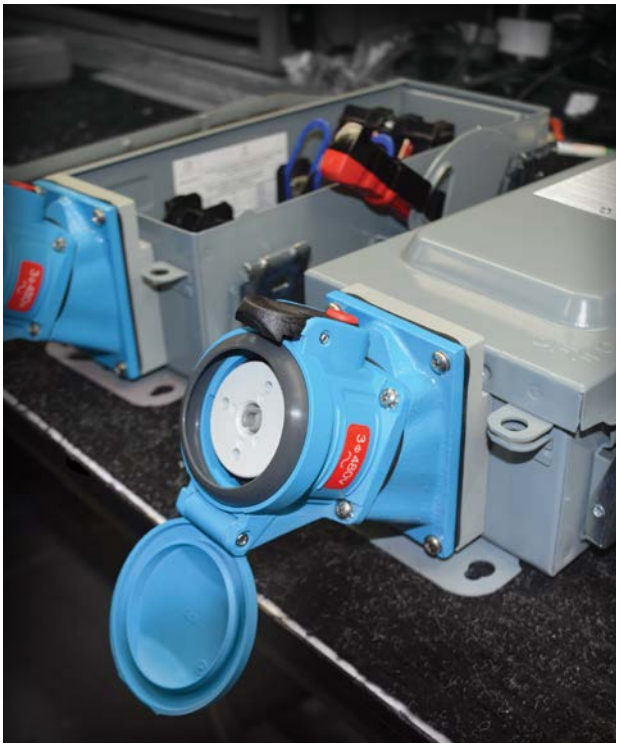

MELTRIC non-interlocked safety switch disconnects are intended for use in power supply applications where additional over current and short circuit protection is desired. Since MELTRIC Switch-Rated Series products are UL and CSA Switch-Rated, there is no need for the receptacle to be interlocked to the switch. The load may be safely made or broken by throwing the switch lever or by simply connecting or disconnecting the plug.

The standard MELTRIC Safety Switch Disconnect consists of a DS Series receptacle and angle mounted and wired to a heavy-duty, single throw, fusible safety switch. They can optionally be provided with DSN series, straight mounting adapters, non-fused switches, or with circuit breaker protection.

Options:
DSN Receptacle (DS is standard)
Straight Adapter (Angle is standard)
Non-Fused (Fused is standard)
Viewing Window
Reverse Service



RECEPTACLE/DISCONNECT COMBINATIONS



VOLTAGE	POLARITY	PART # 30 A POLY	PART # 60 A POLY	PART # 60 A METAL	PART # 100 A POLY	PART # 100 A METAL	PART # 200 A METAL
120 V	1P+N+G	33-37165-22X	33-67165-22X	37-67165-22X	33-97165-22X	37-97165-22X	37-27165-22X
120 208 V	2P+N+G	33-37166-22X	33-67166-22X	37-67166-22X	33-97166-22X	37-97166-22X	37-27166-22X
120 208 V	3P+N+G	33-37167-42X	33-67167-42X	37-67167-42X	33-97167-42X	37-97167-42X	37-27167-42X
125 250 V	2P+N+G	33-37076-22X	33-67076-22X	37-67076-22X	33-97076-22X	37-97076-22X	37-27076-22X
208 V	3P+G	33-37163-32X	33-67163-32X	37-67163-32X	33-97163-32X	37-97163-32X	37-27163-32X
208 V	2P+G	33-37162-12X	33-67162-12X	37-67162-12X	33-97162-12X	37-97162-12X	37-27162-12X
250 V	2P+G	33-37072-12X	33-67072-12X	37-67072-12X	33-97072-12X	37-97072-12X	37-27072-12X
480 V	2P+G	33-37042-12X	33-67042-12X	37-67042-12X	33-97042-12X	37-97042-12X	37-27042-12X
277 480 V	2P+N+G	33-37046-22X	33-67046-22X	37-67046-22X	33-97046-22X	37-97046-22X	37-27046-22X
277 480 V	3P+N+G	33-37047-42X	33-67047-42X	37-67047-42X	33-97047-42X	37-97047-42X	37-27047-42X
480 V	3P+G	33-37043-32X	33-67043-32X	37-67043-32X	33-97043-32X	37-97043-32X	37-27043-32X
347 600 V	2P+N+G	33-37146-22X	33-67146-22X	37-67146-22X	33-97146-22X	37-97146-22X	37-27146-22X
347 600 V	3P+N+G	33-37147-42X	33-67147-42X	37-67147-42X	33-97147-42X	37-97147-42X	37-27147-42X
600 V	3P+G	33-37143-32X	33-67143-32X	37-67143-32X	33-97143-32X	37-97143-32X	37-27143-32X
600 V	2P+G	33-37142-12X	33-67142-12X	37-67142-12X	33-97142-12X	37-97142-12X	37-27142-12X

Notes: When ordering a Safety Switch Disconnect, replace the "X" with the appropriate number that represents the NEMA Rating of choice.

NEMA GUIDELINES

X (NUMBER)	NEMA RATING
9	Type 4X
7	Type 12
5	Type 3R
1	Type 1

ORDERING INFORMATION FOR OPTIONAL CONFIGURATIONS

DSN Receptacle	To order a DSN receptacle (30-60 A), change prefix **"33"** to **"63"**. **NOTE:** DSN60 products are not available in Type 12.	Example: DSN 60 A Poly Receptacle 250 VAC (2P+G) Type 1 = ***63***-67072-121
Straight Adapter	To order a straight adapter, add suffix **-S** to the part number.	Example: DS 60 A Metal Receptacle 480 VAC (3P+G) Type 1 = 37-67043-321-***S***
Non-Fused	To order a non fused device, add suffix -**NF** to the part number.	Example: DS 30 A Poly Receptacle 250 VAC (2P+G) Type 3R = 33-37072-125-***NF***



SPECIALTY PRODUCTS

MELTRIC manufactures a wide variety of specialty products to fit specific application needs and to help users benefit from the advantages of MELTRIC Switch-Rated plugs and receptacles wherever connections may need to be made and broken.

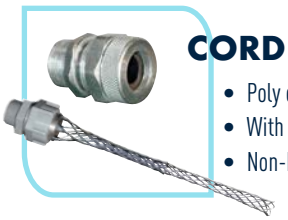

CORD GRIPS FOR SECURE CORD MOUNTING P. 231

- Poly or metal
- With or without mesh
- Non-hazardous or hazardous locations



PHASE METER & VOLTAGE INDICATORS FOR TESTING MELTRIC RECEPTACLES P. 233

- 20 A to 200 A sizes
- Test voltage presence or motor rotation
- Featuring DSN and DS inlets



CORD GRIPS

Aluminum Cord Grips
w/Metal Mesh (optional)





HANDLE NPT (C)	CABLE RANGE (B)	PART # ALUMINUM CORD GRIP	PART # ALUMINUM CORD GRIP W/MESH
1/2"	.312-.375"	**CG121A**	**CG121AM**
1/2"	.375-.438"	**CG122A**	**CG122AM**
1/2"	.438-.500"	**CG123A**	**CG123AM**
1/2"	.500-.562"	**CG124A**	**CG124AM**
1/2"	.562-.625"	**CG125A**	**CG125AM**
3/4"	.438-.500"	**CG340A**	**CG340AM**
3/4"	.500-.562"	**CG341A**	**CG341AM**
3/4"	.562-.625"	**CG342A**	**CG342AM**
3/4"	.625-.750"	**CG344A**	**CG344AM**
3/4"	.688-.812"	**CG345A**	**CG345AM**
1"	.750-.875"	**CG1001A**	**CG1001AM**
1"	.812-.938"	**CG1002A**	**CG1002AM**
1"	.875-1.000"	**CG1003A**	**CG1003AM**
1 1/4"	.875-1.000"	**CG1141A**	**CG1141AM**
1 1/4"	1.000-1.125"	**CG1142A**	**CG1142AM**
1 1/4"	1.125-1.250"	**CG1143A**	**CG1143AM**
1 1/4"	1.250-1.375"	**CG1144A***	**CG1144AM***

HANDLE NPT (C)	CABLE RANGE (B)	PART # ALUMINUM CORD GRIP	PART # ALUMINUM CORD GRIP W/MESH
1 1/2"	1.250-1.375"	**CG1121A**	**CG1121AM**
1 1/2"	1.312-1.437"	**CG1125A**	**CG1125AM**
1 1/2"	1.438-1.562"	**CG1122A**	**CG1122AM**
1 1/2"	1.562-1.688"	**CG1123A***	**CG1123AM***
1 1/2"	1.688-1.812"	**CG1124A***	**CG1124AM***
2"	1.688-1.812"	**CG2001A**	**CG2001AM**
2"	1.812-1.938"	**CG2002A***	**CG2002AM**
2"	1.938-2.062"	**CG2003A***	**CG2003AM***
2"	2.062-2.188"	**CG2004A***	**CG2004AM***
2"	2.188-2.312"	**CG2005A***	**CG2005AM***
2"	2.312-2.438"	**CG2006A***	**CG2006AM***
2 1/2"	1.938 - 2.062"	**CG2120A**	**CG2120AM**
2 1/2"	2.062-2.188"	**CG2121A**	**CG2121AM**
2 1/2"	2.188-2.312"	**CG2122A**	**CG2122AM**
2 1/2"	2.312-2.438"	**CG2123A***	**CG2123AM***
3"	2.437-2.625"	**CG3001A**	**CG3001AM**
3"	2.625-2.812"	**CG3002A**	**CG3002AM**

Poly Cord Grips



Handle NPT (C)	Cable Range (B)	Part # Poly Cord Grip
1/2"	.350-.520"	**CG127P**
3/4"	.520-.680"	**CG347P**
1"	.680-.980"	**CG1006P**
1 1/4"	.980-1.260"	**CG1145P**
1 1/2"	1.260-1.560"	**CG1125P**
2"	1.190-1.530"	**CG2001P**
2"	1.520-1.860"	**CG2002P**
2"	1.850-2.190"	**CG2003P***

Note: NPT = National Pipe Taper

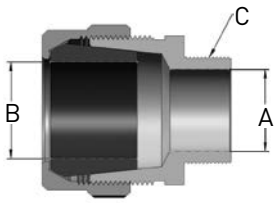

Cord Grip

Note: * Cable may have to be stripped to pass through the bore of the cord grip body (A).

Metal Cord Grips for Hazardous Locations

For use with Class I/II Division 2
Class 1 Zone 1
Zone 21



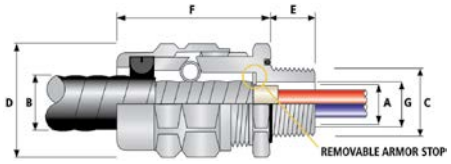

TMC2 Hazardous (Classified) Location Cord Grips for use with Corrugated & Interlocked Metal Clad Armor (MC) or TECK90, Continuously Welded Metal Clad Armor (MCHL), ACIC-HL, ACWU90-HL, RC90-HL, RA90-HL with an overall jacket of polymeric material.

PART # CORD GRIP	MATERIAL	ENTRY THREAD "C"	MINIMUM THREAD LENGTH "E"	CABLE ARMOR DIAMETER "A"				CABLE JACKET DIAMETER "B"		THRU BORE "G"	ACROSS FLATS "D"	ACROSS CORNERS "D"	NOMINAL ASSEMBLY LENGTH "F"
				ARMOR STOP IN		ARMOR STOP OUT							
				MIN	MAX	MIN	MAX	MIN	MAX	MAX	MAX	MAX	
TMC2-050NB075	Nickel Plated Brass	1/2"	0.78"	0.42"	0.55"	0.55"	0.63"	0.50"	0.75"	0.51"	1.20"	1.32"	2.44"
TMC2-050NB099	Nickel Plated Brass	1/2"	0.78"	0.60"	0.65"	0.65"	0.89"	0.69"	0.99"	0.61"	1.48"	1.63"	2.96"
TMC2-075NB118	Nickel Plated Brass	3/4"	0.80"	0.79"	0.86"	0.86"	1.10"	0.87"	1.18"	0.82"	1.81"	1.99"	3.15"
TMC2-100NB137	Nickel Plated Brass	1"	0.98"	0.94"	1.08"	1.08"	1.28"	1.02"	1.37"	1.04"	2.05"	2.26"	3.55"

For use with Class I/II Division 2
Class 1 Zone 1
Zone 21



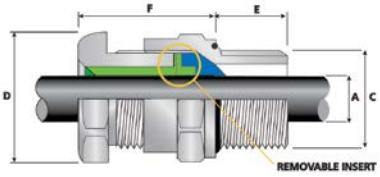

TC Hazardous (Classified) Location Cord Grips for use with all types of Unarmored Tray Cables, Extra Hard Usage Flexible Cables and Cord.

PART # CORD GRIP	MATERIAL	ENTRY THREAD "C"	MINIMUM THREAD LENGTH "E"	CABLE RANGE "A"		CABLE RANGE "A"		ACROSS FLATS "D"	ACROSS CORNERS "D"	NOMINAL ASSEMBLY LENGTH "F"
				INSERT		NO INSERT				
				MIN	MAX	MIN	MAX	MAX	MAX	
TC-050NB028	Nickel Plated Brass	1/2"	0.78"	0.126"	0.276"	N/A	N/A	1.201"	1.321"	1.200"
TC-050NB055	Nickel Plated Brass	1/2"	0.78"	0.256"	0.406"	0.406"	0.551"	1.201"	1.323"	1.200"
TC-075NB079	Nickel Plated Brass	3/4"	0.80"	0.437"	0.610"	0.610"	0.787"	1.476"	1.626"	1.200"
TC-100NB104	Nickel Plated Brass	1"	0.98"	0.669"	0.854"	0.854"	1.035"	1.811"	1.992"	1.650"

Fiber Reinforced Poly Cord Grips for Hazardous Locations

For use with Class I/II Division 2
Class 1 Zone 1
Zone 21



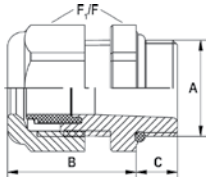

PART # CORD GRIP	CABLE RANGE	THREAD TYPE & SIZE	DIMENSIONS (INCHES)			
			CLEARANCE HOLE	BODY LENGTH	THREAD LENGTH	WRENCH FLATS
			"A"	"B"	"C"	"F1/F"
CD13NA-BXA	.24 - .47"	1/2"	0.83"	1.06"	.51"	.95"
CD16NA-BXA	.39 - .55"	1/2"	0.83"	1.10"	.51"	1.06"
CD21NA-BXA	.51 - .71"	3/4"	1.05"	1.22"	.55"	1.29"
CD21NR-BXA	.35 - .63"					
CD29NA-BXA	.71 - .98"	1"	1.35"	1.53"	.75"	1.65"
CD29NR-BXA	.51 - .79"					

PHASE / VOLTAGE METERS

Phase Rotation



Voltage/Phase Rotation Meters offer customers an easy means of testing MELTRIC poly or metal 3P+G and 3P+N+G receptacles for voltage as well as motor rotation. The product consists of a poly inlet and poly handle wired to the meter.

Order Example

The plug with voltage indicator should be ordered to match the receptacles to be tested.



Existing 63-64043 receptacle



Matching plug with voltage assembly 63-61043-MTR

Switch-Rated Inlet and Phase Rotation Meter Assemblies

DSN Series

VOLTAGE	POLARITY	PART #				
		DSN20	DSN30	DSN60	DSN100	DSN150
208 V	3P+G	63-11123-K16-MTR	63-31163-MTR	63-61163-MTR	63-81163-MTR	63-91163-MTR
250 V	3P+G	63-11073-MTR	63-31073-MTR	63-61073-MTR	63-81073-MTR	63-91073-MTR
480 V	3P+G	63-11043-MTR	63-31043-MTR	63-61043-MTR	63-81043-MTR	63-91043-MTR
600 V	3P+G	63-11143-MTR	63-31143-MTR	63-61143-MTR	63-81143-MTR	63-91143-MTR

Notes: Contact Customer Service for price and availability of inlet and rotation meter assemblies not published here.

DS Series

VOLTAGE	POLARITY	PART #				
		DS20	DS30	DS60	DS100	DS200
208 V	3P+G	33-11163-MTR	33-31163-MTR	33-61163-MTR	33-91163-MTR	37-21163-MTR
250 V	3P+G	33-11073-MTR	33-31073-MTR	33-61073-MTR	33-91073-MTR	37-21073-MTR
480 V	3P+G	33-11043-MTR	33-31043-MTR	33-61043-MTR	33-91043-MTR	37-21043-MTR
600 V	3P+G	33-11143-MTR	33-31143-MTR	33-61143-MTR	33-91143-MTR	37-21143-MTR

Notes: Contact Customer Service for price and availability of inlet and rotation meter assemblies not published here.

Voltage Indicators



Voltage Indicators offer customers a quick and efficient means of testing their MELTRIC receptacles for voltage and proper connection. The product consists of an inlet (with cap) and handle prewired to the voltage indicator.
Designed to provide impact resistance for enhanced durability in all applications.

The indicator LEDs flash at different speeds depending on the voltage. The flashing speed is faster at higher voltages.



Example of proper VAC connection

For a proper connection, the phase LEDs will flash, and the ground LEDs will remain off. If ground LEDs are flashing, there is voltage present and immediate attention is required.



ChekVolt
Voltmeter Compatible
Test points + LED
Voltage presence indicators



Hazardous Location
Class I Div 2
Group A, B, C, & D
For Hazardous Location devices ONLY

Order Example

The voltage indicator should be ordered based on the receptacle to be tested.



Existing 63-34043 receptacle



Matching plug with voltage indicator 63-31043-MVI

OR



Matching plug with voltage indicator 63-31043-MVI-CV

OR



Matching plug with voltage indicator 22-31043-MVI-HZ

Switch-Rated Inlet and Voltage Indicator Assemblies

DSN Series

VOLTAGE	POLARITY	PART #					SUFFIX
		DSN20	DSN30	DSN60	DSN100	DSN150	CHEKVOLT
208 V	3P+G	63-11123-K16-MVI	63-31163-MVI	63-61163-MVI	63-81163-MVI	63-91163-MVI	-CV
250 V	3P+G	63-11073-MVI	63-31073-MVI	63-61073-MVI	63-81073-MVI	63-91073-MVI	-CV
480 V	3P+G	63-11043-MVI	63-31043-MVI	63-61043-MVI	63-81043-MVI	63-91043-MVI	-CV
600 V	3P+G	63-11143-MVI	63-31143-MVI	63-61143-MVI	63-81143-MVI	63-91143-MVI	-CV

Notes: Contact Customer Service for price and availability. Contact Engineering for Hazardous Location indicator.

DS Series

VOLTAGE	POLARITY	PART #					SUFFIX
		DS20	DS30	DS60	DS100	DS200	CHEKVOLT
208 V	3P+G	33-11163-MVI	33-31163-MVI	33-61163-MVI	33-91163-MVI	37-21163-MVI	-CV
250 V	3P+G	33-11073-MVI	33-31073-MVI	33-61073-MVI	33-91073-MVI	37-21073-MVI	-CV
480 V	3P+G	33-11043-MVI	33-31043-MVI	33-61043-MVI	33-91043-MVI	37-21043-MVI	-CV
600 V	3P+G	33-11143-MVI	33-31143-MVI	33-61143-MVI	33-91143-MVI	37-21143-MVI	-CV

Notes: Contact Customer Service for price and availability. Contact MELTRIC Engineering for Hazardous Location indicator.



ACCESSORIES & OPTIONS

PILOT CONTACTS ..... P. 237
PAWL OPTIONS ..... P. 238
SELF-EJECTING DEVICES ..... P. 239
LID CONFIGURATIONS ..... P. 241
MICROSWITCH ..... P. 242
ADDITIONAL WATERTIGHTNESS ..... P. 242
HANDLES ..... P. 243
PLUG CAPS ..... P. 245
ADAPTER PLATES ..... P. 246

AUXILIARY/PILOT CONTACTS

Auxiliary/Pilot contacts can operate secondary circuits on the inlet or receptacle side of the circuit. They make last and break first when the plug is engaged or disengaged from the receptacle. To order a device with auxiliary/pilot contacts, add the appropriate suffix numbers listed below. Amperage ratings for the auxiliary/pilot contacts depend on the device size and operating voltage (see table below).



Switch-rated plugs and receptacles with auxiliary/pilot contacts can make the operation of a facility safer and more efficient by facilitating the use of advanced control schemes. They allow facilities to:

- **Quickly reconfigure or change-out processing equipment.** The need for hardwiring or multiple plug connections is eliminated.
- **Reduce equipment costs.** The need for separate connections for the pilot contacts is eliminated.
- **Simplify the monitoring of key parameters.** Thermistors on a motor driving a critical process pump can communicate temperature problems via pilot contacts in the DECONTACTOR™.
- **Communicate alarm signals or turn off equipment.** When a motor is disconnected or unplugged, the pilot contacts can convey a signal that will de-energize the motor starter.

Auxiliary Contact Amperage Ratings for MELTRIC Devices

Product	DSN20	DSN30 DSN60	DSN150	DS20 DS30 DS60 2 AUX DSN100 2 AUX	DS100 DS200	DS60 3+4 AUX DSN100 3+4 AUX	DXN30 DXN60	PFQ300	PF (ALL SIZES)	P66	DR30 DR50 DR100 2 AUX	DR150 DR225 DR250 DR400	DR100 3+4 AUX	SP	SPEX	DS7c	DR7c
120 VAC	0.60 A	6 A	1.50 A	6 A	1.50 A	3 A	5 A*	7 A	10 A*	10 A*	6 A	1.50 A	3 A	0.60 A**	-	-	-
240 VAC	0.30 A	3 A	0.75 A	3 A	0.75 A	1.50 A	5 A*	5 A	10 A*	10 A*	3 A	0.75 A	1.50 A	1 A	6 A* (220 V max)	-	5 A*
480 VAC	-	1.50 A	0.38 A	1.50 A	0.38 A	0.75 A	5 A	2 A*	10 A*	-	1.50 A	0.38 A	0.75 A	-	-	5 A* (400 V max)	-
600 VAC	-	1.20 A	0.30 A	1.20 A	0.30 A	0.60 A	5 A* (550 V max)	2 A*	10 A*	-	1.20 A	0.30 A	0.60 A	-	-	-	-

* Rating is not UL or CSA listed **Rating is not UL listed.

Ordering Information

To order on a device, add the appropriate suffix to both the inlet and receptacle part numbers.

PRODUCT	DSN					DS					DXN		PFQ	PF			P66	DR					DR7c DS7c	SP
	20*	30	60	100	150	20	30	60	100	200	30	60	300	300	400	600		30	50	100	150	250		
2 contacts	-972	-972	-972	-972	-262	-972	-972	-972	-262	-972	-972	-972	–	–	–	–	–	-972	-972	-972	-262	-972	-172	Standard 2
3 contacts	–	–	-973	-263	-263	–	-973	-263	-263	–	–	–	–	–	–	–	–	–	-973	-263	-263	–	-173	–
4 contacts	–	–	-974	-264	-264	–	-974	-264	-264	-174	–	–	Standard 8	Standard 4	Standard 4	Standard 4	Standard 8	–	-974	-264	-264	-174	–	–
5 contacts	–	–	–	–	-975	–	–	–	-975	–	–	–	–	–	–	–	–	–	–	–	-975	–	–	–
6 contacts	–	–	–	–	-976	–	–	–	-976	-976	–	–	–	–	–	–	–	–	–	–	-976	-976	–	–

* Suffix on receptacle only.

PAWL OPTIONS

Mushroom Pawl

The mushroom pawl is available as an alternative to the standard pawl. It is ideal for a quick disconnection of motors and other equipment, or in areas where employees use gloves and it is difficult to operate the standard pawls. The button has a red "stop" label for easy recognition.

Example:
To order on a receptacle add suffix ***-375*** *to the receptacle part number.*

*DSN20 poly receptacle 3P+G=63-14073-**375***



Available on:

DSN, DS, DR and DN devices only

Screw-Type Locking Pawl

Screw-type locking pawls are available and include a screw which can be tightened to "lock" the pawl in place, preventing release of the plug or the lid.

Example:
To order on a receptacle add suffix ***-845*** *to the receptacle part number.*

*DS30 poly receptacle 3P+G =33-34163-**845***



Available on:

DSN, DS, DR and DN devices only

Padlock Pawl

Standard pawls and mushroom pawls can be provided with a .32" hole that allows the lid of the receptacle to be locked closed or alternatively the plug can be locked in the connected position. Lockout Pin sold separately

Example:
To order on a receptacle add suffix ***-843*** *to the receptacle part number.*

*DSN20 poly receptacle 3P+G = 63-14073-**843***



Available on:

DSN, DS, DR, DXN and DN devices only

Notes: A 5/16" diameter lock or lockout pin is needed for proper operation. Do not substitute a smaller diameter lock/pin.

Metal Pawl

Metal pawls are standard with metal receptacles only. If you prefer a metal pawl on a poly receptacle, add suffix **-824** to the poly receptacle part number.

Example:
*DS60 poly receptacle 3P+G=33-64163-**824***



Available on:

DSN, DS, DR and DXN devices only

Electro-Mechanical Locking System

The latch of the receptacle is equipped with a plug presence detection system.

- When linked to an upstream control device the external power supply is only turned on once the plug is fully engaged.
- The rotary button activates the locking system
- In the ON position the receptacle release latch is disabled and the inlet cannot be removed.
- In the case of LED or switch failure, connection of the plug is prevented for safety reasons.

Locking system is integrated in the module

- The system lock works either for the lid only or with the plug connected.
- When the system is locked, operation of the pawl is disabled:
  1. the rotary on/off is disabled
  2. the release pawl is disabled preventing the receptacle lid to be opened or the plug to be remove
- Integrated lockout/tagout provisions
- **When ordering the MIL option, product IP and UL ratings are voided.**

Example:
To order on a receptacle add suffix ***-MIL*** *to the receptacle part number.*
*DS200 receptacle 3P+N+G=37-24147-**MIL***



Available on:

DS200, DR250 and DR400 devices only

SELF-EJECTING DEVICES

General

Self-ejecting devices protect equipment from damage caused when mobile equipment is accidentally moved without disconnecting power. Self-ejecting systems are designed to automatically release the plug or connector when tension is detected by a tension cord attached between the pawl and the power cable.

Applications

Self-ejecting devices are commonly used on truck hook-ups, cranes, railroad cars, refrigerated food carts, delivery vehicles and other portable equipment.

Self-Ejecting Female Connector

For self-ejecting female connectors, the standard pawl on the connector is replaced by a "shark's fin" pawl that is attached to the power cable via a tension cord. If the connected equipment is moved, the tension cord lifts the shark's fin pawl and the connector is released before damage can occur.

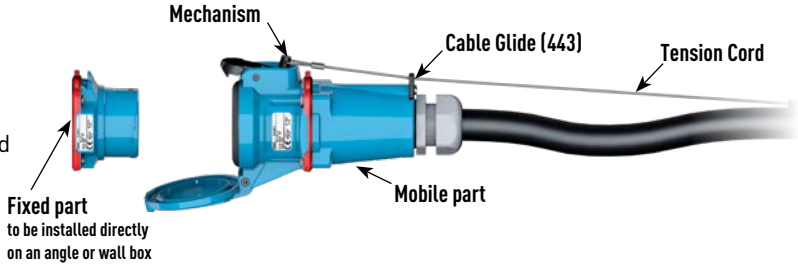

Available on:
DSN (All sizes)
DS (All sizes, except DS200)
DN9c*, DN20c*, DS7c

How To Order:
To the female receptacle, add suffix **-354**
To the handle part number, add suffix **443.**
Note the poly handle with NPT and poly handle with cord grip for Size 2 devices includes an integrated cable guide and a 443 sufffix is not required.

Example:
To order a DSN30 self-ejecting receptacle and poly handle (3/4"), the part numbers would be:
*Receptacle: 63-34043-**354***
*Handle: 512P0N07**443***

Example:
To order a DSN60 self-ejecting receptacle and poly handle (3/4"), the part numbers would be:
*Receptacle: 63-64043-**354***
*Handle: 513P0N07**443***

* For DN9c and DN20c ordering, use suffixes listed in DN9c and DN20c section

Notes: Self-ejecting devices are modified to allow straight insertion. This defeats the safety shutter and voids the device's switch-rating.

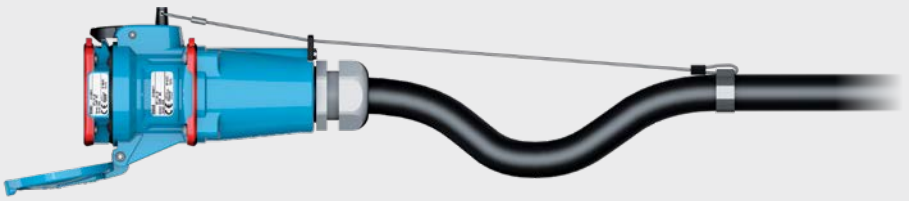

Step 1: Self-ejection system at rest.
A tension cord is attached to the power cable and the shark fin pawl of the plug..

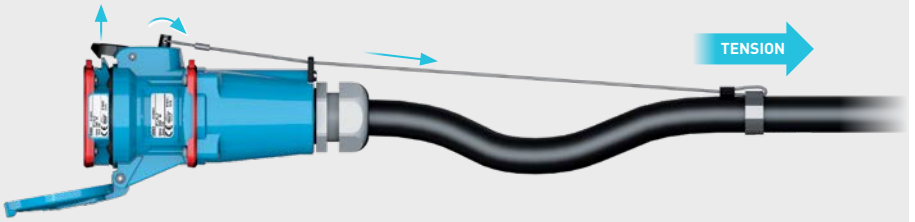

Step 2: Tension on the power cable will automatically lift the shark fin pawl via the tension cord.

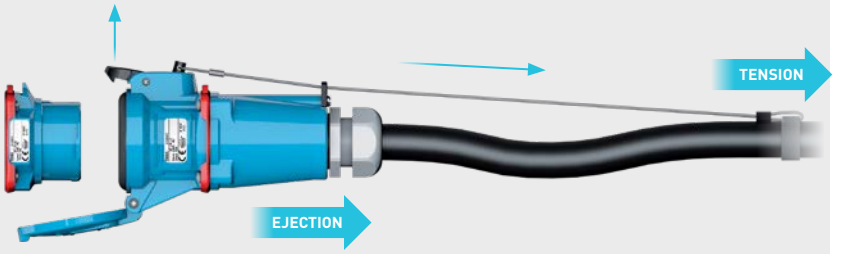

Step 3: Once the shark fin pawl is lifted, the receptacle pulls away from the plug.

Self-Ejecting Plug

For self-ejecting plugs, a lever mechanism is added to the assembly and attached to the power cable via a tension cord. When tension is applied to the power cable, the tension cord engages the lever mechanism, which in turn lifts the standard pawl on the receptacle and releases the plug before damage can occur.

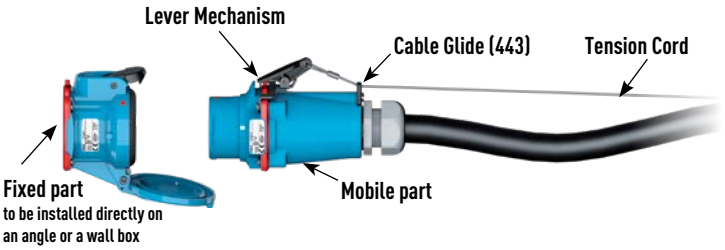

Available on:

DSN20, DSN30, DSN60, DS20, DS30, DS60, DS7c

How To Order:
To the male inlet, add suffix **-338**
To the female receptacle, add suffix **-352**
To the handle part number, add suffix **443**
Note the poly handle with NPT and poly handle with cord grip for Size 2 devices includes an integrated cable guide and a 443 sufffix is not required.

Example:
To order a DSN30 self-ejecting plug, receptacle and poly handle (3/4"), the part numbers would be:

*Inlet: 63-38043-**338***
*Receptacle (straight Insertion): 63-34043-**352***
Handle: 512P0N07

To order a DSN60 self-ejecting plug, receptacle and poly handle (3/4"), the part numbers would be:

*Inlet: 63-68043-**338***
*Receptacle (straight Insertion): 63-64043-**352***
*Handle: 513P0N07**443***

Notes: Self-ejecting devices are modified to allow straight insertion. This defeats the safety shutter and voids the device's switch-rating.



Step 1: A tension cord is attached to the power cable and the lever mechanism of the plug. Self-ejection system at rest.

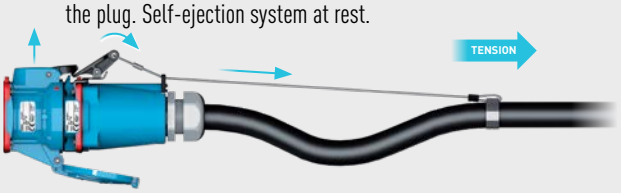

Step 2: The tension acts on the power cable and the cord. The lever mechanism gradually raises the receptacle pawl.

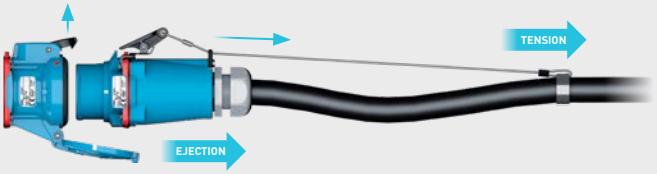

Step 3: The receptacle pawl is fully raised by the lever mechanism, causing the automatic ejection of the plug.

Self-Ejecting Plug
(DS100, DSN150, DS200, DN20c only)

For self-ejecting plugs on DS100, DSN150, DS200 and DN20c models, a cam mechanism is used in lieu of the 'lever mechanism.' The principle of operation remains the same.

How To Order:*
To the male inlet, add suffix **-338**
To the female receptacle, add suffix **-352**
To the handle part number, add suffix **443**

Example:
To order a poly DS100 self-ejecting plug, receptacle and poly handle (3/4"), the part numbers would be:

*Inlet: 33-98043-**338***
*Receptacle (straight Insertion): 33-94043-**352***
*Handle: 515P0N07**443***

* For DS200 ordering, use suffixes listed in DS200 section
* For DN20c ordering, use suffixes listed in DN20c section



Notes: Self-ejecting devices are modified to allow straight insertion. This defeats the safety shutter and voids the device's switch-rating.

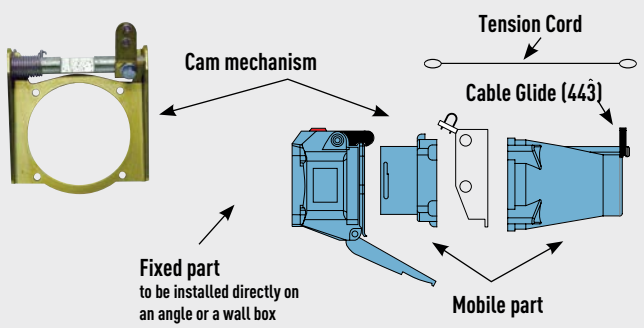

LID CONFIGURATIONS

There are four standard open lid configurations depending on the model and size of the device: 180° open, 120° open, 90° open and detached. Optionally, customers can order lids that are Self-Returning, or if the lid opens to 120° as standard, it can be ordered to open 180° for flush mounted inlets (DS & DR only).

Standard Lid Configurations



180° OPENING LIDS

Standard for:
DSN20, DSN30, DSN60, DSN100, DSN150
DS20, DS30, DS60, DS100, DS200
DR30, DR50, DR100, DR150, DR250, DR400
DSDC1, DSDC3, DSDC6, DSDC9, DSDC2
DS7c, DR7c
DSN12c, DSN24c, DSN37c
DXN20, DXN30, DXN60
DX1, DX3, DX6, DX9



120° OPENING LIDS

Standard for:
PN
DN9c, DN20c
PXN12c

Notes: DSN, DS, DR, and DSDC Hazardous receptacles have standard lid configurations that are the same as their industrial ordinary location equivalents, except they are normally closed.



DETACHED LIDS

Standard for:
PN stainless steel
DS24c stainless steel
DS37c stainless steel
PFQ300, PF300, PF400, PF600
P66
SP, SPeX
CS1000
DXA1
DXN25c, DXN37c

Optional Lid Configurations

Self-Returning Lid (Receptacles only)

A Self-Returning lid is available for applications where it is desirable to protect the receptacle face from dust, debris, or potential damage. This option provides a lid that will automatically close to a pre-latch position after removal of the plug. The lid **must still be latched manually** in order to achieve rated watertightness.

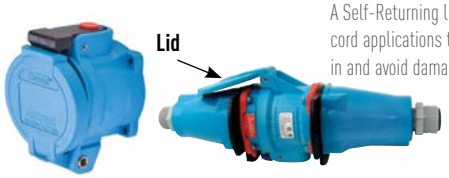

A Self-Returning lid is recommended for cord to cord applications to keep the lid tucked in and avoid damage.

CLOSED LID

Available as option on:
DSN (All sizes)
DS (All sizes)
DR (All sizes)
DN (All sizes)

Examples:
*To order a DSN, DS, DR, or DN device with a Self-Returning lid add **-NC** to the receptacle part number.*
DS20 Poly receptacle:
*2P+G = 33-14162-**NC***

*To order a DXN device with a Self-Returning lid add **-R** to the receptacle part number.*
*DXN20 receptacle 3P+G = 22-14043-**R***

180° Open Receptacle Lid for Flush Mounted Inlets (DS and DR devices only)

When ordering an inlet that will be mounted directly flush against a wall or surface without an angle or box, the connector (receptacle + handle) may require the lid to be set for 180° opening.



180° OPEN RECEPTACLE LID FOR FLUSH MOUNTED INLETS

Available as option on:
DN20c

Example:
*To order this configuration add suffix **-180** to the receptacle part number.*

*DN20c Receptacle 10P+G= 17-64101-**180***

MICROSWITCH

Female receptacles/connectors with up to 3 poles/4 wires are available with an optional microswitch for operating secondary circuits on the line side of the circuit. The microswitch is rated at 5 A and includes one set of normally open (NO) and one set of normally closed (NC) contacts. With the three phase devices the neutral contact of the plug operates the switch which is located in the neutral contact position in the receptacle. With the single phase units the third phase contact on the plug operates the switch which is located in the third phase contact position in the receptacle.

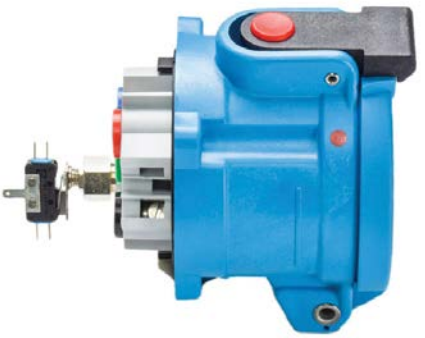

Examples:
Order a device with an auxiliary switch by adding suffix ***-270*** *to the receptacle or inlet part number.*
*DSN30 Poly Receptacle 3P+G = 63-34043****-270***
*DSN30 Poly Inlet 3P+G=63-38043****-270***

Notes: Devices ordered with auxiliary switch option are not UL/CSA listed.

ADDITIONAL WATERTIGHTNESS

Additional water protection is available for DS or DR models that offer only Type 3R protection as standard. The following Type 4X option may be ordered for these DS or DR models.



Type 4X Watertightness

Type 4X waterproofing is used for applications where connectors, plugs, and receptacles are subjected to water pressure. A gasket is added to the inlet and the receptacle lid is made to self-return and be manually closed.

Example:
To order on a device add suffix ***-4X*** *to the inlet and receptacle part number.*

*DS20 Poly Inlet 2P + E = 33-18162****-4X***

POLY HANDLES

MELTRIC provides a diverse selection of handle options designed to meet a broad range of applications and requirements. All handles offer ample wiring space. The below descriptions highlight the key benefits for each handle type.
For more detailed information or specific use cases, please email MELTRIC Engineering or your sales representative.

POLY HANDLE



- Integrated bushing
- Multiple bushings included to accomodate various cable sizes

Available for:

DSN: Size 1, 2, 3, 4	DR: Size 2, 3, 4	DS Zone 2: Size 2, 3
DS: Size 2, 3, 4	PN: Size 1	DR Zone 2: Size 2, 3
Multipin: Size 1, 2, 3, 4	DSDC: Size 2, 3, 4	DSDC Zone 2: Size 2, 3, 4

POLY ANGLED HANDLE



- Compact, ideal for confined spaces.
- Integrated multiple bushings to accomodate various cable sizes.

Available for:

DSN: Size 1	Multipin: Size 1	PN: Size 1

POLY HANDLE WITH CORD GRIP



- Cord grip included
- Provides strain relief

Available for:

DSN: Size 1, 2, 3, 4, 5	Multipin: Size 1, 2, 3, 4, 5	PN: Size 1
DS: Size 2, 3, 4, 5, 6	DR: Size 2, 3, 4, 5, 6	DXN: Size 1, 2, 3

POLY HANDLE WITH CLAMP & BUSHING



- Integrated bushing
- Dedicated strain relief

Available for:

DSN: Size 2, 3	Multipin: Size 2, 3
DS: Size 2, 3	DR: Size 2, 3

POLY HANDLE WITH NPT



- Add cord grip for strain relief
- Allows for the use of a variety of industry standard NPT fittings and added ingress protecton (p165-166)

Available for:

DSN: Size 1, 2, 3, 4, 5	PN: Size 1	DS Zone 2: Size 2, 3, 4
DS: Size 2, 3, 4, 5, 6	DSDC: Size 2, 3, 4, 5, 6	DR Zone 2: Size 2, 3
Multipin: Size 1, 2, 3, 4, 5	DSP: Size 4	DSDC Zone 2: Size 2, 3, 4
DR: Size 2, 3, 4, 5, 6	DXN: Size 1, 2, 3	

POLY HANDLE WITH BUILT-IN DRAWPLATES



- Ideal for cord-to-cord applications
- Multiple bushings included to accomodate various cable sizes

Available for:

DSN: Size 2, 3	Multipin: Size 2, 3
DS: Size 2, 3	DR: Size 2, 3

POLY EXTENDED HANDLE



- Space for extra wiring
- Integrated bushing
- Multiple bushings included to accomodate various cable sizes

Available for:

DSN: Size 1	Multipin: Size 1

SANTOPRENE HANDLE



- Longer for extra wiring space
- Integrated bushing
- Dedicated strain relief

Available for:

DSN: Size 4, 5	Multipin: Size 4, 5	DSN Zone 2: Size 5
DS: Size 4, 5, 6	DR: Size 4, 5, 6	DS Zone 2: Size 6
		DR Zone 2: Size 6

POLY 90° WITH NPT



- Compact, ideal for confined spaces
- Allows for the use of a variety of industry standard NPT fittings

Available for:

PN7c: Size 1	PN20: Size 1

METAL HANDLES

OVERSIZED METAL HANDLE WITH NPT



- Ergonomic dual grips
- Easy handling for large cable
- Allows for the use of a variety of industry standard NPT fittings and cord grip options (pg 165-166)

Available for:

DSN: Size 5
DS: Size 5, 6
DR: Size 5, 6, 7
DSN Zone 2: Size 5

METAL HANDLE WITH CORD GRIP



- Cord grip included
- Provides strain relief

Available for:

DSN: Size 1, 2, 3, 4, 5
DS: Size 2, 3, 4, 5, 6
Multipin: Size 1, 2, 3, 4, 5
DR: Size 2, 3, 4, 5, 6
PN: Size 1

STRAIGHT HANDLE (BOLT-ON OR NPT)

Bolt-on Clamp



NPT



- Ergonomic dual grips
- Bump-outs provide drop resistance
- Bolt-on: Longer for extra wiring space, integrated bushing
- NPT: Allows for the use of a variety of industry NPT fittings; versatile cord grip options (pg 165-166)

Available for:

DS: Size 6
DR: Size 6, 7

METAL STRAIGHT HANDLE



PF shown

- Ergonomic dual grips
- Bolt-on: Longer for extra wiring space, integrated bushing
- NPT: Allows for the use of a variety of industry NPT fittings; versatile cord grip options (pg 165-166)

Available for:

PF: Size C
PFQ: Size F

STRAIGHT HANDLE WITH INTEGRATED CABLE GLAND



- Designed with horn-shaped feet to lay on ground and protect casing.
- 2x extra M40 cable glands can be added.

Available for:

P66

METAL HANDLE WITH CORD GRIP (FOR HIGH TEMP)



- Ideal for high temperature environments

Available for:

PNHT: Size 1

METAL HANDLE WITH NPT



- NPT to connect to a flexible conduit connector
- Allows for the use of a variety of industry standard NPT fittings
- Add cord grip for strain relief (p165-166)

Available for:

DSN: Size 1, 2, 3, 4, 5
DS: Size 2, 3, 4, 5, 6
Multipin: Size 1, 2, 3, 4, 5
DR: Size 2, 3, 4, 5, 6
PN: Size 1
PNHT: Size 1
DSDC: Size 2, 3, 4, 5, 6
DSN Zone 2: Size 5
DS Zone 2: Size 2, 3, 4, 5, 6
DR Zone 2: Size 2, 3, 6
DSDC Zone 2: Size 2, 3, 4, 5, 6

LARGE METAL HANDLE WITH CORD GRIP, MESH AND CABLE RANGE



- Easy handling for large cable
- Ergonomic dual grips
- Cord grip included
- Provides strain relief

Available for:

DR: Size 7

METAL ANGLE HANDLE



- Ergonomic dual grips
- Reduces space and stress on device connection
- NPT: Allows for the use of a variety of industry NPT fittings; versatile cord grip options (pg 165-166)

Available for:

PF: Size C
PFQ: Size F

90° HANDLE WITH INTEGRATED CABLE GLAND



- Made up of 2 parts: Top and body. Allows for user-friendly installation of pre-crimped cables.
- Accomodates M40 cable glands.

Available for:

P66

INLET/PLUG CAPS

Protective Inlet/Plug Caps

Neoprene caps provide an extra level of protection from dust, dirt, and rough handling for male plugs.



Typical for DSN, DS20, DS30, DS60, DS100C, DR30, DR50, DR100, DXN



Typical for DSN150, DS100, DS200, DR150, DR250, DR400



Typical for DN devices



Typical for PN devices

Ordering Information

Model	Protective Inlet/Plug Cap
DSN20/DSN12c	61-1A426
DSN30/DSN24c	61-3A426
DSN60/DSN37c	61-6A426
DSN150	31-9A426
DS20/DR30/DSDC1	31-1A426
DS30/DR50/DSDC3	31-3A426
DS60/DSN100 DR100/DS7c/DR7c/DSDC6	31-6A426
DS100/DR150/DSDC9	31-9A426
DS200/DR250/DR400/DSDC2	39-2A426
DXN20	22-1A426
DXN30	22-3A426
DXN60	22-6A426
DN9c	19-1A126*
DN20c	19-6A126*
PN20/PN7c/PN12c	01-NA426
DXA1	28-1A426
CS1000	45-3A126

* Non-Watertight

Padlockable Inlet/Plug Caps

Padlockable caps can be locked in place to prevent unwanted removal.



Typical for: DSN20, DSN30, DSN60, DSN100 DS20, DS30, DS60, DR30, DR50, DR100 DSDC1, DSDC3, DSDC6



Typical for: DS60, DS100, DS200 DSN100, DSN150, DR100, DR150, DR250, DR400, DSDC9, DSDC2

Ordering Information

Model	Padlockable Inlet/Plug Cap
DSN20/DSN12c	61-1A826
DSN30/DSN24c	61-3A826
DSN60/DSN37c	61-6A826
DSN150/DS100/DSDC9/DR150	DS9MC (Alum)
DS20/DSDC1/DR30	DS1PC (Poly)
DS30/DSDC3/DR50	DS3PC (Poly)
DS60/DSDC6/DR100/DS7c/DR7c	DS6MC (Alum)/DS6PC (Poly)
DS200/DSDC2/DR250/DR400	DS2MC (Alum)

Notes: A 5/16" diameter lock/pin is needed for proper operation. Do not substitute a smaller diameter lock/pin.

Model	Springloaded Padlockable Cap
DSN30	61-3A226
DSN60	61-6A226
DS20/DR30/DSDC1	31-1A226
DS30/DR50/DSDC3	31-3A226
DS60/DS7c/DR7c/DR100/ DSDC6 (Poly)	31-6A226
DS60/DS100C/DS7c DR7c/DR100/DSDC6 (Metal)	39-6A226

Notes: A 1/4" diameter lock/pin is needed for proper operation. Do not substitute a smaller diameter lock/pin.

The inlet lockout hole is not completely sealed off by the DS_MC and Springloaded Padlockable caps. If environmental protection is needed while the plug is disconnected, the inlet should be ordered without the standard hole.

Example:
To order an inlet without a lockout hole add suffix –A155 to the inlet part number.

DS60 Metal inlet 2P+G= 37-68162–A155

ADAPTER PLATES



Updating your facility with MELTRIC plugs and receptacles is simple and affordable with MELTRIC adapter plates. They allow the mounting of MELTRIC devices to existing boxes previously used for competitive devices. This avoids the cost and hassle of installing new boxes and performing associated re-piping and rewiring.

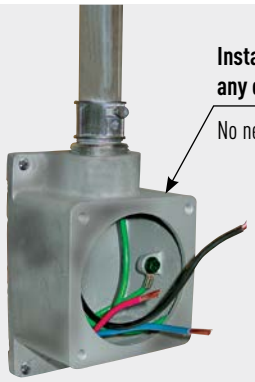

Install MELTRIC on virtually any existing back box

No need to bend conduit or pull wires.



MELTRIC Adapter Plates

Available for hundreds of competitive wall boxes, disconnect switches and mechanical interlocks.

MELTRIC Receptacle



If an adapter plate for the box you have is not listed, contact Customer Service and MELTRIC will design a new one to fit your application.

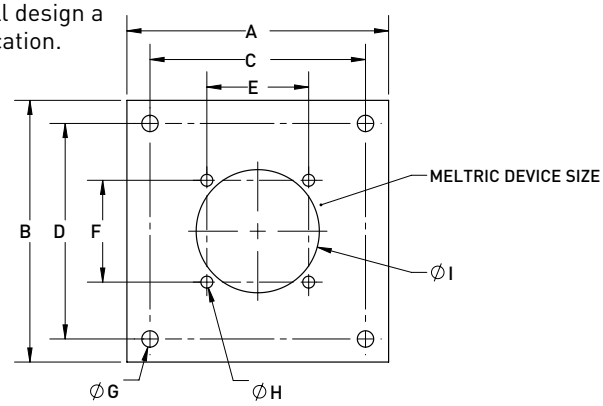

Dimensions Listed in Inches

Part #	MELTRIC Device Size	A	B	C	D	E	F	DIA. G	DIA. H	DIA. I	J
CHARE23	2	3.38	3.38	2.734	2.734	1.890	1.890	.257	8-32	2.25	.25
CHARE36	3	4.25	4.25	3.500	3.500	2.178	2.178	.332	8-32	2.63	.25
CHARE56	4	4.25	4.25	3.500	3.500	2.589	2.589	.375	10-32	3.25	.25
AP-RAC04X4-FS*	1,2,3	4.06	4.06	-	-	1.875	3.250	-	.160	2.25	.06
AP-CARL0NFS-MA1*	1,2,3	3.13	4.54	1.875	3.281	2.500	3.750	.150	10-32	2.00	.25
AP-CHAR341-DSN30	2	3.38	3.38	2.720	2.720	1.890	1.890	.234	8-32	2.25	.25
AP-HBL-DSN30	2	3.75	3.75	3.125	3.125	1.890	1.890	.188	8-32	2.25	.25
AP-00052*	1,2,3	3.00	4.75	1.875	3.250	2.500	3.750	.150	10-32	2.25	.25

Note: * Plate designed for use with an angle adapter.
When using an adapter plate, the environmental rating of the plug and receptacle cannot be guaranteed.



TECHNICAL MANUAL & REFERENCE

SWITCH-RATINGS VS CURRENT INTERRUPTING RATINGS P. 249
ELECTRICAL PERFORMANCE ..... P. 250
BUTT-CONTACT TECHNOLOGY ..... P. 253
DEAD-FRONT CONSTRUCTION ..... P. 255
KEYING SYSTEM ..... P. 256
DUAL VOLTAGE DEVICES ..... P. 256
RESISTANCE TO ENVIRONMENTS AND CHEMICALS ..... P. 257
ENVIRONMENTAL/INGRESS PROTECTION..... P. 259
IMPACT RESISTANCE ..... P. 260
OPERATING TEMPERATURES..... P. 260
COLOR-CODED GASKETS & LABELS ..... P. 261
PARTS INDEX..... P. 263

ELECTRICAL PERFORMANCE – Switch-Rated, Current Interrupting Rated and Non-Current Interrupting Rated Devices

Switch-Rated Plugs & Receptacles

MELTRIC DSN & DS Series products are UL & CSA listed as Switch-Rated plugs and receptacles. These ratings allow them to be used as a motor circuit disconnect switch, as well as a branch circuit disconnect switch. Switch-Rated plugs and receptacles have passed electrical overload, short circuit, and endurance tests that are far more rigorous than those applied to other plugs and receptacles. These tests include the functional requirements for safety disconnect switches in addition to manual motor controllers. For more information about the tested electrical performance of Switch-Rated devices consult pages 250 - 252.

Current Interrupting Rated Plugs & Receptacles

Other MELTRIC devices such as the DXN plugs and receptacles are UL and/or CSA rated for "current interrupting". A current interrupting rated plug and receptacle is not subjected to the same level of endurance testing as a Switch-Rated device and does not need to be subjected to any overload-locked rotor or short circuit testing (see pages 250-251 for performance test comparisons). Plug and receptacles rated for "current interrupting" are not intended to be used as switches, but can withstand making and breaking of normal resistive loads. Devices that are not hp and short circuit rated are not intended to make and break motor loads or other inductive loads.

Non-Current Interrupting Rated Plugs & Receptacles

Many competitive plugs and receptacles, as well as some MELTRIC devices are "non-current interrupting" rated. They are not approved by UL or CSA for connecting or disconnecting under load. They have passed the minimum test requirements for plugs and receptacles but they have not passed current interrupting performance tests or the more demanding electrical endurance, overload and short circuit tests required of Switch-Rated devices. For more information about the tested electrical performance of non-current interrupting rated devices consult pages 250-251.

MELTRIC Device Ratings	
Ratings	**Product**
Switch-Rated	DSN
	DS
	DS7c
Current-Interrupting Rated	DXN
	DXA1
	Multipin
	DR (select models only)
	PN
	DX
	Competitors Pin and Sleeve
Non-Current Interrupting Rated	Multipin
	DSDC
	PF/PFQ
	P66
	Single Pole
	Zone 2
	Competitors Pin and Sleeve

ELECTRICAL PERFORMANCE

Overload Conditions

UL & CSA standards for plugs and receptacles require that the devices be able to withstand overload conditions. General use conditions are simulated by testing a device to a specified number of operations (50) at 150% of rated current and a power factor (p.f) between 0.75 and 0.80. Switch-Rated plugs and receptacles that are horsepower rated must perform overload testing at 600% of full load motor current with a more severe power factor (between 0.40 and 0.50) to simulate locked rotor conditions.

UL & CSA Standards – Overload Test Requirements and Ratings Comparisons

Test	UL Subject 2682 (used for both UL & CSA listings) Switch-Rated Plugs & Receptacles Motor/Branch Circuit Switch-Rated (Typical)	UL 1682 & CSA 22.2 No. 182.1 Plugs, Receptacles & Cable Connectors of the Pin & Sleeve Type	
		Current Interrupting	Non-Current Interrupting (Typical)
Overload (General Use Devices)	50 Operations @ 150% of rated Current (p.f. = .75 - .80)	50 Operations @ 150% of rated Current (p.f. = .75 - .80)	3 Operations @ 150% of rated Current (p.f. = .75 - .80)
Overload - Locked Rotor (Horsepower Rated Devices) and Electrical Endurance	50 Operations @ 600% of Full Load Amperage (p.f. = .40 - .50) + 6000 Operations @ rated horsepower FLA (p.f. = .75-.80)	50 Operations* @ 600% Full Load Amperage (p.f. = .40 - .50)	-

The overload requirement for testing DC devices is 1 operation.
*Testing is optional.

Test Results: Completed Operations at Overload/Locked Rotor Condition

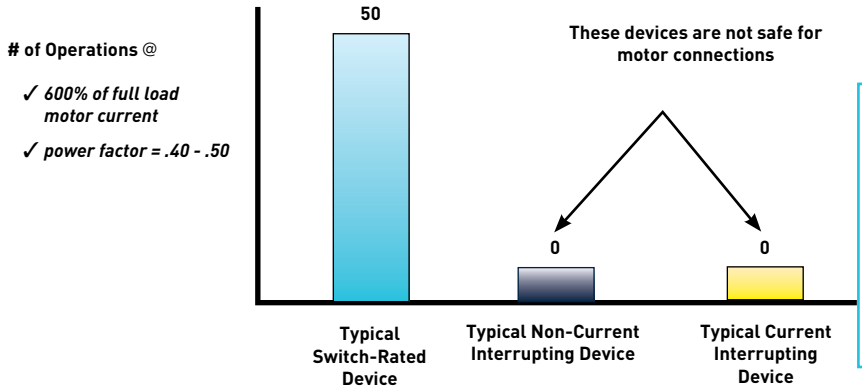

MELTRIC is Reliable

MELTRIC devices can withstand temporary overloads due to frequent restarting of motors.

Brass pin and sleeve devices cannot withstand temporary overloads that heavily oxidize contacts, causing them to weld.





Motors and other equipment can be quickly and safely connected or disconnected with MELTRIC's Switch-Rated plugs and receptacles.

ELECTRICAL PERFORMANCE

Mechanical and Electrical Endurance

UL and CSA standards require endurance testing to ensure that rated performance is maintained over the expected life of the device. The severity of this testing depends on the rating of the device.

As shown in the chart below, non-current interrupting devices are tested only for mechanical endurance. Current interrupting devices are additionally subjected to moderate electrical endurance testing while Switch-Rated devices are subjected to a much more severe level of electrical endurance testing, which is similar to that required of disconnect switches. In this regard, Switch-Rated devices may be required to make and break under full load more than 20 times as many operations (depending upon device amperage) as a current interrupting rated pin and sleeve device.

UL & CSA Standards – Endurance Test Requirements and Ratings Comparisons

Test	UL Subject 2682 (used for both UL & CSA listings) Switch-Rated Plugs & Receptacles	UL 1682 & CSA 22.2 No. 182.1 Plugs, Receptacles & Cable Connectors of the Pin & Sleeve Type	
		Current Interrupting (Typical)	Non-Current Interrupting (Typical)
Mechanical Endurance (including Electrical Operations)	6000 Operations	15-20 A = 5000 Operations 21-63 A = 2000 Operations 64-250 A = 500 Operations	**15-20 A = 5000 Operations** **21-63 A = 2000 Operations** **64-250 A = 250 Operations**
Electrical Endurance (with load)	**6000 Operations @ Rated Current & Voltage (p.f. = .75-.80)**	**15-20 A = 5000 Operations** **21-63 A = 1000 Operations[1]** **64-250 A = 250 Operations[1]** **@ Rated Current & Voltage (p.f. = .75 - .80)**	-

Notes: [1] Testing alternates between mechanical & electrical operations. This reduces the severity of the electrical test by allowing additional cooling time during electrical testing.

Electrical Endurance Test Comparison

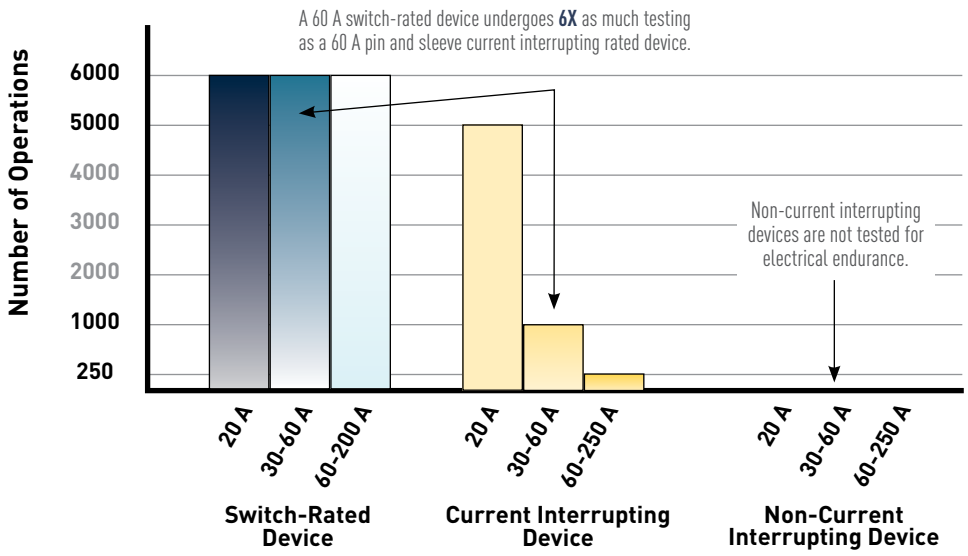

ELECTRICAL PERFORMANCE

Short Circuit Protection

MELTRIC's DS and DSN products have successfully completed high fault current short circuit testing. All of these devices have short circuit make (close) and withstand ratings of either 10 kA, 65 kA, or 100 kA. UL witnessed and approved this testing.

UL Recognized Short Circuit Capabilities

Plug & Receptacle Type	UL Recognized Short Circuit Capabilities Short Circuit Ratings Withstand	Make	Product Standard
General Use Pin & Sleeve Devices	None	None	UL 1682
Horsepower Rated Twist-Type Devices	1 kA	None	UL 498
Motor Rated Pin & Sleeve Devices	10 kA	None	UL 1682
MELTRIC Switch-Rated Devices	**≥ 65 kA**	**≥ 65 kA**	**UL Subject 2682**

Short Circuit Test Information

Fusing – The amperage and time delay characteristics of the fusing used in testing affect the electrical load seen by the device. UL Subject 2682 requires horsepower rated devices to withstand short circuit tests performed with fuses rated no larger than 400% of full load ampacity for motor circuits, or at least 100% of the amperage rating of devices for general branch circuit use.

MELTRIC used Mersen RK1 non-time delay type fusing for the horsepower rated devices because it is a common type of fuse used in motor applications. MELTRIC used RK5 time delayed fusing for non-horsepower ratings because it represents the most severe case of the various fusing scenarios that are typically used for general use applications.

Power Factor – The lower the power factor (p.f.) the more rigorous the test. UL Subject 2682 requires horsepower rated devices to withstand a short circuit test of 10,000 amps with a p.f. of 0.40 to 0.50. By comparison, UL 1682 requires devices with the same horsepower rating to withstand a 10,000 amp short circuit test with a much less rigorous p.f. of 0.70 to 0.80.

Short Circuit Test Summary Table

Device Information		Short Circuit Withstand & Close Rating[1]			
Model	General Use Rating	kA	VAC	Fusing used in Testing	
DSN20	20 A	10	600	RK1	80 A
		100	600	RK1	35 A
DSN30	30 A	100	600	RK1	125 A
DSN60	60 A	100	600	RK1	125 A
DSN100	100 A	100	600	RK1	250 A
DSN150	150 A	10	600	RK1	400 A
	*	100	600	RK1	225 A
DS20	20 A	100	600	RK1	80 A
DS30	30 A	100	600	RK1	125 A
DS60	60 A	100	600	RK1	250 A
DS100	100 A	65	600	RK1	175 A
	100 A	65	600	RK5 TD	100 A
DS200	200 A	10	600	RK1	500 A
		65	600	RK5 TD	200 A

1 Testing performed with RK1 NTD current limiting fuses of a rating at 400% of the motor FLA. Testing with a 400% NTD fuse is representative of a 225% TD fuse. Testing performed with RK5 to current limiting fuse was based on fuses sized at 100% of the device rating for branch circuits. Due to the variances in breaker performance, no testing was performed with circuit breakers. Per UL2682 Testing with inverse-time circuit breakers shall not be required if it is shown that the clearing time of the inverse-time circuit breakers will be less than that of the fuse with which the product has been tested.

* The fusing used limits the 100 kA rating to 60 hp @ 600V, 40 hp @ 480 V, 20 hp @ 240 V & 208 V.

CONTACT TECHNOLOGY

Silver-Nickel Contact Material

MELTRIC products feature solid silver-nickel (85%/15%), spring-loaded butt-style contacts similar to those used in motor starters and contactors. The silver-nickel material has significant advantages over the brass contacts commonly used on competitive devices.

Silver has very low initial contact resistance and is not negatively affected by oxidation. This helps to give it excellent electrical properties that are maintained even at high temperatures and after tarnishing. Nickel is a much harder material and contributes excellent mechanical properties. The combination of silver and nickel results in a contact material that has both superior electrical capabilities and excellent resistance to wear. Silver-nickel only welds at extremely high pressure and temperature, and thus, also withstands arcs very well. These features make silver-nickel a commonly used contact material by switchgear manufacturers.

By contrast, the brass material used in most competitive plugs and receptacles has much higher initial contact resistance and is negatively affected by oxidation. In an oxidized state, the contact resistance of brass is more than 20 times higher than that of silver-nickel. In addition, brass is a soft material that wears rapidly. In use, brass pin and sleeve and arcuate contacts suffer from the combined effects of the limitations of the material and the design. As oxidation and wear induced reductions in contact force occur, contact resistance increases. This increases operating temperature, which causes further oxidation and wear, perpetuating a vicious cycle of degradation. Brass is not arc resistant and is not suitable for making and breaking under load.

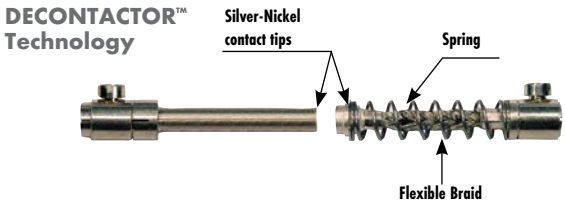



Comparison of pin and sleeve to MELTRIC solid silver-nickel contacts

Spring-Loaded Contacts

Spring-loading of the contacts ensures that optimal pressure between the contacts is maintained – even after thousands of operations. This point is important because contact force is a key determinant of the quality of the connection. As the accompanying graph demonstrates, contact resistance increases as contact force decreases. Higher contact resistance generates more heat and oxidation, both of which contribute to the deterioration of the contact and loss of energy. This is a problem with pin and sleeve and arcuate type contacts because their contact force varies with manufacturing tolerances and is reduced due to wear that occurs with normal use.

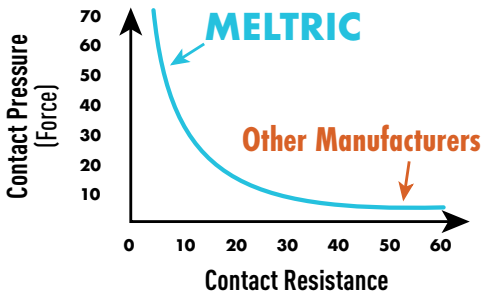

Butt-Style Connection

MELTRIC's butt-style contact configuration provides a positive and secure connection and also makes connection and disconnection easy. With butt-style contacts, the force applied to the contacts is in-line with the insertion motion, so inserting a plug into its socket requires only a known and limited amount of effort. Contact wear and sensitivity to manufacturing tolerances is negligible, because the spring-loading is sufficient to compensate for minor differences in contact length.

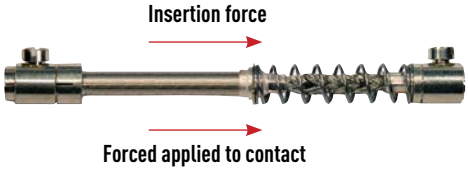

With MELTRIC's butt-style contacts the force applied to the contacts is in-line with the insertion motion.

With the pin and sleeve design used by our competitors, the contact force is at a right angle to the insertion/withdrawal force. There are numerous drawbacks to such a design:

- The contact pressure must be sufficient to prevent excessive temperature rise but is limited by the need to keep the insertion force reasonable.
- The necessary friction wears out the contacts, and diminishes contact pressure over time.
- Normal manufacturing tolerances result in wide variations in performance, even with new devices.
- The sliding contact design does not make & break cleanly, so arcing is more likely to occur.

Quick Break Mechanism

On most MELTRIC devices the circuit is broken simply by depressing the pawl. Doing so releases the energy in a spring-loaded operating mechanism, which instantaneously breaks the circuit and ejects the plug to the 'OFF' position. Contact breaking time is about 15 milliseconds. The quick break mechanism is automatically reloaded when the plug is re-inserted.

In contrast, the disconnection speed of pin and sleeve and twist type devices is dependent on the user's motion when removing the plug.

DECONTACTOR™ Technology

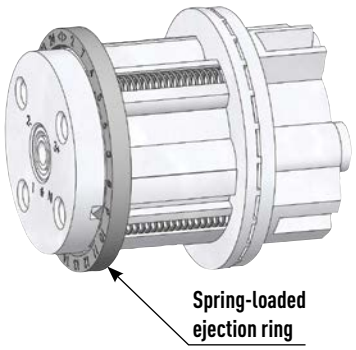

Spring-loaded ejection system ensures a quick break of the contacts.

Self-Cleaning System

Most MELTRIC contacts close with a self-cleaning, wiping action. When the contacts initially mate, they are slightly offset. In completing the connection, the plug contacts are rotated partially across the receptacle contacts, helping to remove deposits from the contact surface.

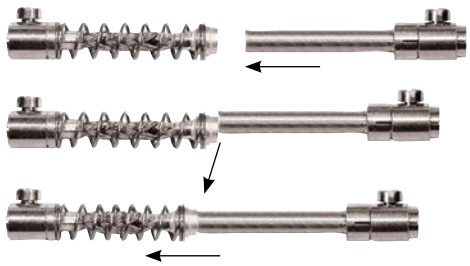

MELTRIC contacts are self-cleaning.

Contact Mating Sequence

MELTRIC contacts mate in a specific sequence to ensure a proper and safe connection.

1. The earth (ground) closes first.
2. Then the neutral.
3. Then the phases.
4. Then the auxiliary contacts, if any. These auxiliary contacts can, therefore, be used as "pilot" contacts.

On opening, the sequence is reversed.

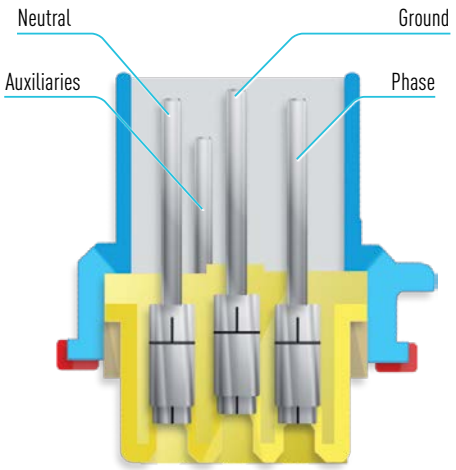

The contacts are set in the plug at different levels to achieve the desired mating sequence.

DEAD-FRONT AND ENCLOSED ARC CHAMBERS

For Maximum Protection from Live Parts

Most MELTRIC receptacles feature a dead-front safety shutter which encloses and isolates the live contacts when the plug is removed. Only electrically compatible plugs can unlock the safety shutter and gain access to the live parts. In addition to preventing accidental exposure to live parts, the safety shutter also keeps the contacts clean and out of reach even if the lid is left open.



The receptacle's dead-front protects workers from accidental tool and wire insertion.

Protection During the Making and Breaking Process

When disconnecting or connecting a MELTRIC plug from/to a receptacle, the user is completely protected from exposure to arc flash or live parts. This is because the contacts can only make or break while they are enclosed in internal arc chambers within the receptacle.

During disconnection, the pressing of the pawl on the receptacle breaks the connection (inside the arc chambers) and ejects the plug to its rest or "OFF" position. While in the rest position, the plug and receptacle casings maintain a dead-front and thus protect the user from live parts. The plug cannot be fully withdrawn until it is rotated 30° counterclockwise. This closes and locks the safety shutter preventing access to live parts during and after the removal of the plug.

During connection, the plug contacts can only access the receptacle contacts after the plug has been partially inserted into the receptacle and has then been rotated 30° to open the safety shutter. Because the interaction of the skirted plug casing with the receptacle forms a protective enclosure that prevents access to the contacts as soon as insertion begins, a dead-front is maintained even after the safety shutter is opened. Once the safety shutter has been opened, the plug contacts can be safely inserted into the arc chambers where the connection is made as the plug is latched to the receptacle.

DECONTACTOR™ Technology

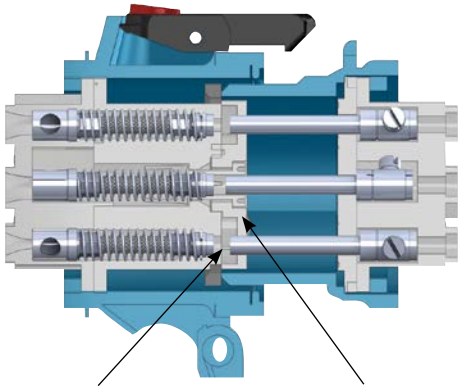

Arc chamber prevents outside exposure to arc flash.

Safety shutter prevents finger or tool access to live parts.

Protection from Insertion of Inappropriate Plugs

Most MELTRIC products utilize multiple keying positions to prevent mating of mismatched voltage/frequency combinations. Only plugs and receptacles that are keyed/notched in the same positions will mate with each other. Non-compatible plugs will be unable to open the safety shutter. This system prevents potentially dangerous situations. For example, a 250 VAC plug (notch 07) cannot be inserted into a 480 VAC receptacle (notch 04). Alternatively, on the PF and DX series, pegs and holes perform the same function as the notches.

Note: Some of the keying positions have been assigned to a designated global voltage. A few others are unassigned and are available if a user prefers to limit mating of plugs and receptacles that are only to be used on particular applications.

Commonly Used Keying Positions

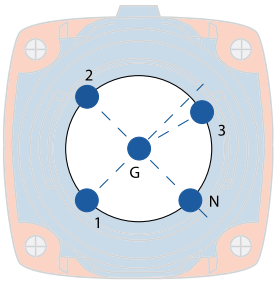

Position 04
277/480 VAC 60 Hz

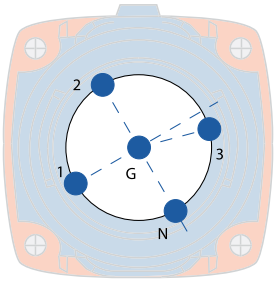

Position 07
125/250 VAC 60 Hz

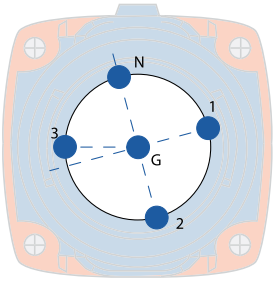

Position 14
347/600 VAC 60 Hz

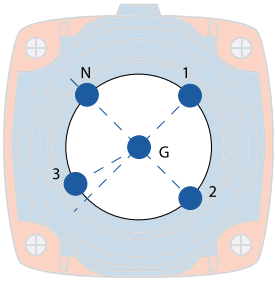

Position 16
120/208 VAC 60 Hz

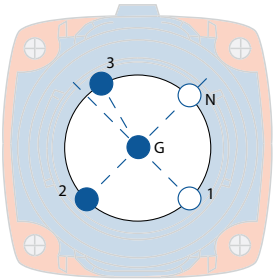

Position 10
125 VDC

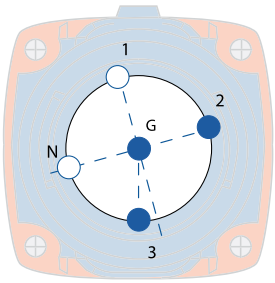

Position 20
250 VDC

Note: See chart on page 9 for a complete list of voltage polarization positions and associated voltages.

How to Identify Keying Positions of an Existing Device

Plug



The keying position of most MELTRIC plugs can be determined by looking at the plug interior and finding a thin, raised line in the casing. This line is always directly above a number that identifies the plug's keying position.

Dual Voltage Devices Maximize User Flexibility

Some MELTRIC receptacles are designed to safely allow dual voltage capabilities.

For example, a 120/208 V rated 3P+N+G receptacle will safely provide power to several configurations of 208 V plugs and a single phase 120 V plug. Having two voltages delivered by a single receptacle allows some facilities to significantly reduce the number of receptacles that need to be installed.

Dual voltage receptacles are supplied with dual color coded voltage stickers.

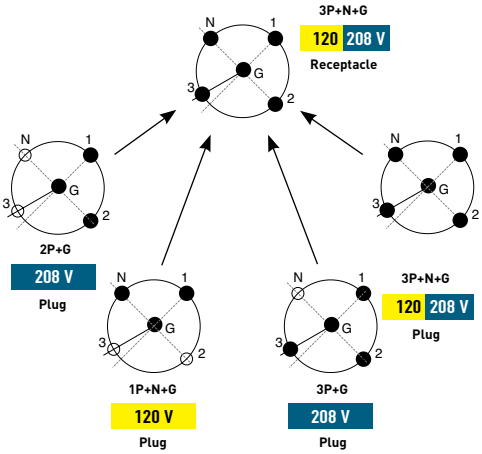

Dual Voltages Typically Available from MELTRIC

125 250 V | 120 208 V | 277 480 V | 347 600 V

DEVICE MATERIALS AND THEIR RESISTANCE TO ENVIRONMENTS AND CHEMICALS

Polymeric Materials

Casings – The common technical name for the "Poly" material used by MELTRIC is polyamide (nylon). It's a glass fibers reinforced, heat stabilized material which provides outstanding resistance to most chemical agents and environmental conditions, including UV radiation. This material also offers high impact resistance across a broad range of temperatures (shock resistance ratings to IK09) and creep resistance.

Interiors – The arc chambers for most MELTRIC devices are made of polyamide. Other materials are used such as Bakelite and melamine.

Accessories – Handles, angles and wall boxes are made of Polyamide (they are supplied with self tapping screws).

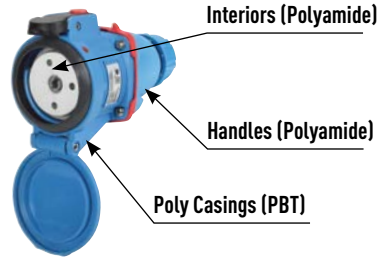

Products with Poly (PBT) Casings

DSN20. DSN30, DSN60, DSN100, DSN150
DS20, DS30, DS60, DS100
DR30, DR50, DR100, DR150
DXN20, DXN30, DXN60
DSN12c, DSN24c, DSN37c, DS7c, DR7c

Resistance of Polymeric Casings to Various Chemical Agents

see note on following page

Agent		Polyester reinforced glass fiber			Polyamide		
		23°C	60°C	80°C	23°C	60°C	80°C
Butyl acetate		☆☆	☆☆		☆☆		
Ethyl acetate		☆			☆☆		
Acetone		☆			☆☆		
Acetic acid	5%	☆☆	☆☆	☆	☆	☆	-
	10%	☆☆	☆	☆	☆	-	-
Hydrochloric acid	10%	☆☆	☆☆	☆☆	☆	-	-
Chromic acid	40%	☆☆	☆☆	☆☆	-	-	
Citric acid	10%	☆☆	☆☆	☆☆	☆		
Formic acid	5%	☆☆	☆	☆	☆	☆	
Nitric acid	10%	☆☆	☆	☆	☆	-	
Oleic acid	100%	☆☆	☆☆	☆☆	☆		
Phosphoric acid	3%	☆☆	☆☆	☆☆	☆		
	30%	☆☆	☆☆	☆☆	-	-	
	85% (conc)	☆☆	☆☆	☆☆	-	-	
Sulphuric acid	3%	☆☆	☆☆	☆☆	-	-	
	30%	☆☆	☆☆	☆☆	-	-	
Ethyl alcohol		☆☆			☆☆		
Methyl alcohol		☆☆			☆☆		
Aniline		☆☆			-		
Benzene		☆	☆		☆☆		
Soda Bicarbonate	10%	☆☆	☆	-	☆☆	☆☆	☆
Potassium bichromate	10%		☆☆			☆☆	
Sodium bisulphate	10%	☆☆	☆	-	☆☆	☆	
Butane		☆☆			☆☆		
Butanol		☆	☆		☆		
Soda carbonate	10%	☆☆	-	-	☆☆	☆☆	☆
	20%	☆☆	-	-	☆☆	☆	☆
Disulphuric carbonate		☆☆			☆☆		
Calcium chloride	10%	☆☆	☆☆		☆☆		
Potassium chloride	10%	☆☆	☆	-	☆☆		
Sodium chloride	10%	☆☆	☆	-	☆☆		
Detergents	1%	☆☆	☆	-	☆☆	☆	
	25%	☆☆	☆	-	☆☆	☆	
Dibutylphtalate		☆☆	☆☆		☆☆		
Dichlorethane		-			☆☆		
Dioxane		☆☆	-		☆☆		
Water		☆☆	☆	-	☆☆	☆☆	☆
Bleach		☆☆	☆		☆☆		
Gas		☆☆			☆☆		
Turpentine		☆☆			☆☆☆		

Agent		Polyester reinforced glass fiber			Polyamide		
		23°C	60°C	80°C	23°C	60°C	80°C
White spirit		☆☆			☆☆		
Ether		☆☆			☆☆		
Freon 11		☆☆			☆☆		
Glycerine		☆	☆		☆☆	☆	-
Glycol		☆	☆		☆☆	☆	-
Grease		☆☆	☆☆	☆☆	☆☆	☆☆	☆☆
Heptane		☆☆			☆☆		
Hexane		☆☆			☆☆		
Cotton seed oil		☆☆	☆☆	☆☆	☆☆	☆☆	☆☆
Silicon oil		☆☆	☆☆	☆☆	☆☆	☆☆	☆☆
Processing oil		☆☆	☆☆	☆☆	☆☆	☆☆	☆☆
Diesel oil		☆☆			☆☆		
Olive oil		☆☆	☆☆	☆☆	☆☆	☆☆	☆☆
Mineral oil		☆☆	☆☆	☆☆	☆☆	☆☆	☆☆
Engine oil		☆☆	☆☆	☆☆	☆☆	☆☆	☆☆
Plant oil		☆☆	☆☆	☆☆	☆☆	☆☆	☆☆
Ammonium hydroxide	10%	☆			☆☆		
	conc	-			☆☆		
Potassium hydroxide	1%	-	-	-	☆☆		
	10%	-	-	-	☆☆		
Sodium hydroxide	1%	-	-	-	☆☆		
	10%	-	-	-	☆☆		
Calcium hypochlorite		☆☆	☆☆		☆☆		
Sodium hypochlorite	10%	☆☆	☆	-	-		
Isopropanol		☆	☆		☆		
Braking liquid		☆☆	☆☆	☆☆	☆☆		
Methylethycetone		☆☆	☆		☆☆		
Perchlorethylene		☆☆	☆☆		☆☆	☆	-
Potassium permanganate	10%	☆☆			-		
Oil		-			-		
Hydrogen peroxide	3%	☆☆			-		
	30%	☆☆			-		
Soap solution	1%	☆☆	-	-	☆☆		
Carbon tetrachloride		☆☆			☆☆		
Tetrahydrofurane		☆			☆		
Toluene		☆☆			☆☆		
Trichlorethylene		☆			☆☆	☆	☆
Vaseline		☆☆	☆☆	☆☆	☆☆	☆☆	☆☆
Xylene		☆☆			☆☆		

Legend: ☆☆ = Excellent ☆ = Good - = Poor

Metal Materials

Casings – Metal casings providing even greater impact resistance are standard on some MELTRIC products and are optional on others. Depending upon the product line, these casings may be made of zamak, aluminum or stainless steel. Aluminum, is the most commonly used. Aluminum receptacles are epoxy coated and aluminum plugs are specially treated to further improve corrosion resistance.

Contacts – All MELTRIC contact surfaces are made of solid silver-nickel with the exception of some of the high ampacity and single pole contacts which are solid pure silver. Silver-nickel and silver both provide excellent resistance to climatic conditions and to all known chemical agents found in industry with the exception of sulphuric acid. Products installed in sulphuric acid environments should have an environmental rating of at least Type 4X or IP66.

Accessories – Wall boxes, angles, and handles are in zamak or aluminum alloy. All zamak accessories are standardly protected by an epoxy paint.



Products with Metal Zamak Casings

PN20, PN7c, PN12c, DN20c, DN9c
Inlet only: DSN150, DS100, DS200, DR150, DR250

Products with Aluminum Casings

PN (HT)
DS60, DS100, DS200
DSN100
DR100, DR150, DR250, DR400
DS7c, DR7c
DX1, DX3, DX6, DX9
PFQ300, PF300, PF400, PF600
P66
DXA1

Products with Stainless Steel Casings

PN7c, PN12c
DS24c, DS37c

Contact customer service for availability of Stainless Steel on other products.

Resistance of Metal Casings to Corrosive Agents

Agent	Protected zamak or aluminum
Dry lighting gas	☆☆
Water steam	☆
Hot water	☆
Artificial sea water	☆
Soluble oil 3%	☆
Soluble oil 5%	☆☆
Cleansing soap	☆☆
Potash solution 1%	☆
Potash solution 5%	☆
Ammonia 1%	☆
Ammonia 5%	☆
Sodium chloride 1%	☆
Sodium chloride 5%	☆
Acetic acid 1%	☆
Acetic acid 5%	–
Gas	☆☆
Engine oil	☆☆
Printing ink	☆
Ethyl or methyl alcohol	☆☆
Trichloethylene	☆
Dry insecticides	☆

Legend: ☆☆ = Excellent ☆ = Good – = Poor

These resistance charts are intended to give a general overview of the performance of our casings and mounting accessories. It is not intended to provide a guarantee of performance of our product as that will depend on the concentration of the chemical, the application temperature, the duration of the exposure, and other application specific factors. In cases where chemical compatibility may be in question the established practice is to place a representative sample device in the application environment to see how it holds up.

ENVIRONMENTAL/INGRESS PROTECTION
(ENCLOSURE TYPE AND IP RATINGS)



Product	Type	IP
DSN/DS⁺/DR⁺/DSN12c/ DSN24c/DSN37c	4X	66/67/69/69K
PN7c	-	66/67
PN12c	4X	66/67
DSDC⁺	4X	69/69K
DN9c/DN20c	-	54/55
DS7c/DR7c/DSP400	-	66/67/69/69K
PN20	4X	66/67
PNHT	-	44
PF/PFQ/P66/CS1000/SP DXN/DXA/DXN25c/DXN37c	-	66/67
ZONE 2	4X	-
DX1/DX3	-	65
DX6/DX9/PXN12c/SPeX	-	65/66
PNCX		66/67/69

⁺ DS20, DS30, DR30, DR50, DSDC1, DSDC3 come standard as 3R with 4X upgrade available as an option. These devices will not have an associated IP rating.
Note: The ratings in the table above do not apply to stainless steel devices.

Environmental Ratings Explained

NEMA/UL/CSA Enclosure Types (UL50)

Enclosure Type	Intended Use and Description
1	Indoor use primarily to provide a degree of protection against limited amounts of falling dirt.
2	Indoor use primarily to provide a degree of protection against limited amounts of waste and falling dirt.
3, 3R, 3S	Outdoor use primarily to provide a degree of protection against rain, sleet, and damage from external ice formation
4, 4X	Indoor or outdoor use primarily to provide a degree of protection against windblown dust and rain, splashing water, hose-directed water, and damage from external ice formation.
12	Indoor use primarily to provide a degree of protection against circulating dust, falling dirt and dripping non-corrosive liquids.

IP Ratings (IEC/EN 60529)

First Digit Protection against the ingress of solid foreign objects and access to hazardous parts			Second Digit Protection against the ingress of water with harmful effects	
0	No protection	–	**0**	No protection
1	50 mm	Back of hand	**1**	Vertically dripping water (condensation)
2	12.5 mm	Finger	**2**	Dripping water at 15°
3	2.5 mm	Tool	**3**	Spraying water at 60° (rain)
4	1 mm	Wire	**4**	Splashing water from any direction
5	Against Dust	–	**5**	Jetting water from any direction
6	Dust-tight	–	**6**	Powerful jetting water from any direction
–		–	**7**	Temporary submersion
–		–	**9**	High pressure, high temperature jet sprays

IMPACT RESISTANCE

MELTRIC product resistance to mechanical shocks is specified in accordance with their IK ratings.

MELTRIC Products IK Ratings (per IEC/EN 50102)

Product	Material	IK Ratings (in Joules)
DSN	Poly	09 (10)
	Metal (size 4-6)	10 (20)
DS	Poly	09 (10)
DS	Metal (size 4-6)	10 (20)
DR	Poly	09 (10)
DR	Metal (size 4-6)	10 (20)
DN	Metal	09 (10)
PN	Poly	09 (10)
PN/PXN12c	Metal	09 (10)
PF	Metal	10 (20)
P66	Metal	10 (20)
DX	Metal	10 (20)
DXN	Poly	09 (10)
DXN25c/37c	Metal	09 (10)
SP/SPeX	Poly	09 (10)
DXA1	Metal	10 (20)
CS1000	Poly	08 (5)

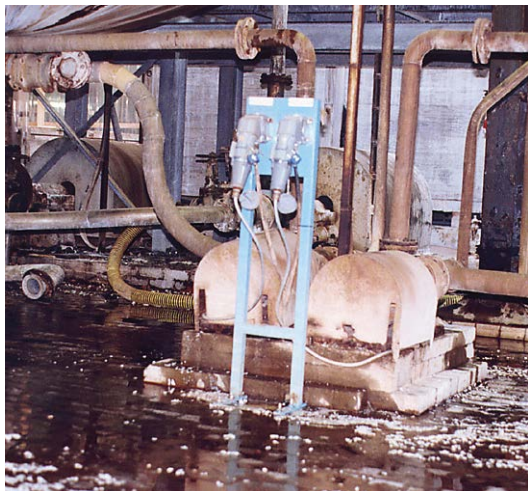

OPERATING TEMPERATURES

Hot Temperatures

Some devices that do not contain any polyamide can operate up to 176°F/80°C but precise conditions and duty cycles must be submitted to the MELTRIC engineering department for approval. A limited range of products are available for ambient temperatures up to 464°F/240°C. Contact MELTRIC engineering for more information.

Cold Temperatures

Below -15°F materials become more brittle and impact should be avoided, especially on polyamide materials. However, MELTRIC's metal and polyester casings can be used as low as -40°F/-40°C and some MELTRIC devices are in service at -75°F/-60°C. Contact engineering for more information.

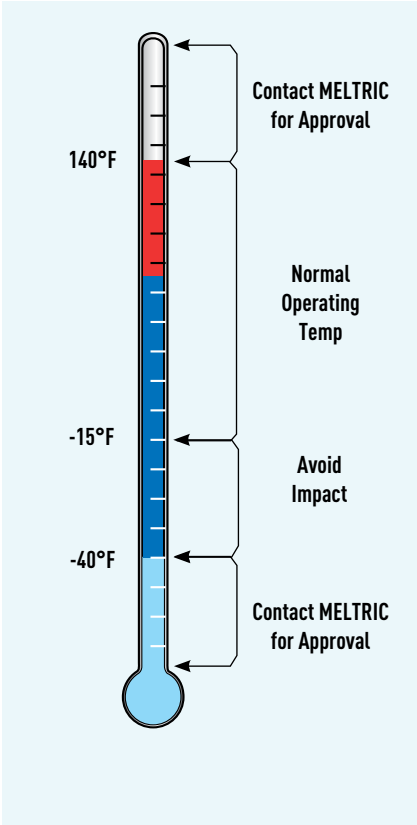

COLOR CODED GASKETS & LABELS
FOR VOLTAGE IDENTIFICATION

PIN CONFIGURATION	VOLTAGE RANGE	FREQUENCY	5th, 6th and 7th PART NUMBER DIGITS	RECEPTACLE/CONNECTOR		PLUG/INLET	
				COLOR GASKET	VOLTAGE STICKER	COLOR GASKET	VOLTAGE STICKER
1P+N+G	110 - 125 V	60 Hz	075	ORANGE	ORANGE	ORANGE	ORANGE
	120 - 127 V	60 Hz	165	YELLOW	YELLOW	YELLOW	YELLOW
	255 - 277 V	60 Hz	045	GREY	GREY	GREY	GREY
	347 V	60 Hz	145	RED	RED	RED	RED
	110 - 130 V	50 Hz	035	YELLOW	YELLOW	YELLOW	YELLOW
	220 - 250 V	50 Hz	015	BLUE	BLUE	BLUE	BLUE
	380 - 440 V	50 Hz	195	RED	RED	RED	RED
	577 V	50 Hz	225	BLACK	BLACK	BLACK	BLACK
	115 - 127 V	200 Hz	125	GREEN	YELLOW	GREEN	YELLOW
	115 - 127 V	400 Hz	115	GREEN	YELLOW	GREEN	YELLOW
2P	20 - 24 V	60 Hz	02A	VIOLET	VIOLET	VIOLET	VIOLET
	20 - 24 V	50 Hz	08A	VIOLET	VIOLET	VIOLET	VIOLET
	25 - 28 V	50 Hz	06A	VIOLET	VIOLET	VIOLET	VIOLET
	40 - 48 V	50 Hz	13A	WHITE	WHITE	WHITE	WHITE
2P+G	208 - 220 V	60 Hz	162	BLUE	BLUE	BLUE	BLUE
	220 - 250 V	60 Hz	072	ORANGE	ORANGE	ORANGE	ORANGE
	440 - 480 V	60 Hz	042	RED	RED	RED	RED
	600 V	60 Hz	142	BLACK	BLACK	BLACK	BLACK
	190 - 230 V	50 Hz	032	BLUE	BLUE	BLUE	BLUE
	380 - 440 V	50 Hz	012	RED	RED	RED	RED
	480 - 500 V	50 Hz	092	BLACK	BLACK	BLACK	BLACK
	660 - 690 V	50 Hz	192	BLACK	BLACK	BLACK	BLACK
	1000 V	50 Hz	222	BLACK	BLACK	BLACK	BLACK
	200 - 220 V	200 Hz	122	GREEN	BLUE	GREEN	BLUE
	200 - 220 V	400 Hz	112	GREEN	BLUE	GREEN	BLUE
	110 - 130 V	DC	109	YELLOW	YELLOW	YELLOW	YELLOW
	220 - 250 V	DC	209	BLUE	BLUE	BLUE	BLUE

PIN CONFIGURATION	VOLTAGE RANGE	FREQUENCY	5th, 6th and 7th PART NUMBER DIGITS	RECEPTACLE/CONNECTOR		PLUG/INLET	
				COLOR GASKET	VOLTAGE STICKER	COLOR GASKET	VOLTAGE STICKER
2P+N+G	110 - 125 V / 220 - 250 V	60 Hz	076	ORANGE	ORANGE	ORANGE	ORANGE
	120 - 127 V / 208 - 220 V	60 Hz	166	BLUE	YELLOW / BLUE	BLUE	YELLOW / BLUE
	255 - 277 V / 440 - 480 V	60 Hz	046	RED	GREY / RED	RED	GREY / RED
	347 - 600 V	60 Hz	146	BLACK	RED / BLACK	BLACK	RED / BLACK
	110 - 130 V / 190 - 230 V	50 Hz	036	BLUE	YELLOW / BLUE	BLUE	BLUE
	220 - 250 V / 380 - 440 V	50 Hz	016	RED	BLUE / RED	RED	RED
	380 - 400 V / 660 - 690 V	50 Hz	196	BLACK	RED / BLACK	BLACK	BLACK
	480 - 500 V	50 Hz	096	BLACK	BLACK	BLACK	BLACK
	115 - 127 V / 200 - 220 V	200 Hz	126	GREEN	YELLOW / BLUE	GREEN	BLUE
	115 - 127 V / 200 - 220 V	400 Hz	116	GREEN	YELLOW / BLUE	GREEN	BLUE
3P+G	208 - 220 V	60 Hz	163	BLUE	BLUE	BLUE	BLUE
	220 - 250 V	60 Hz	073	ORANGE	ORANGE	ORANGE	ORANGE
	440 - 480 V	60 Hz	043	RED	RED	RED	RED
	600 V	60 Hz	143	BLACK	BLACK	BLACK	BLACK
	190 - 230 V	50 Hz	033	BLUE	BLUE	BLUE	BLUE
	380 - 440 V	50 Hz	013	RED	RED	RED	RED
	480 - 500 V	50 Hz	093	BLACK	BLACK	BLACK	BLACK
	660 - 690 V	50 Hz	193	BLACK	BLACK	BLACK	BLACK
	1000 V	50 Hz	223	BLACK	BLACK	BLACK	BLACK
	200 - 220 V	200 Hz	123	GREEN	BLUE	GREEN	BLUE
	200 - 220 V	400 Hz	113	GREEN	BLUE	GREEN	BLUE
3P+N+G	110 - 125 V / 220 - 250 V	60 Hz	077	ORANGE	ORANGE	ORANGE	ORANGE
	120 - 127 V / 208 - 220 V	60 Hz	167	BLUE	YELLOW / BLUE	BLUE	YELLOW / BLUE
	255 - 277 V / 440 - 480 V	60 Hz	047	RED	GREY / RED	RED	GREY / RED
	347 - 600 V	60 Hz	147	BLACK	RED / BLACK	BLACK	RED / BLACK
	110 - 130 V / 190 - 230 V	50 Hz	037	BLUE	YELLOW / BLUE	BLUE	BLUE
	220 - 250 V / 380 - 440 V	50 Hz	017	RED	BLUE / RED	RED	RED
	380 - 400 V / 660 - 690 V	50 Hz	197	BLACK	RED / BLACK	BLACK	BLACK
	480 - 500 V	50 Hz	097	BLACK	BLACK	BLACK	BLACK
	115 - 127 V / 200 - 220 V	200 Hz	127	GREEN	YELLOW / BLUE	GREEN	BLUE
	115 - 127 V / 200 - 220 V	400 Hz	117	GREEN	YELLOW / BLUE	GREEN	BLUE
MULTIPIN		NOT	SPECIFIED	SKY BLUE	SKY BLUE	SKY BLUE	SKY BLUE

PARTS INDEX

PART NUMBER	PG
01AAA113	212
01AA213	212
01EA125	208
01EA126	208
01-2A142	62
01-NA010	109
01-NA010-B	109
01-NA010-T	109
01-NA011	109
01-NA014	79
01-NA019	109
01-NA020	110
01-NA020-B	110
01-NA020-T	110
01-NA021	110
01-NA024	110
01-NA029	110
01-NA426	212
01-NA583	109
01-NAB26	109
01-NAC26	109
01-NAJ26	109
01-NAN26	109
01-NAR26	109
01-N4042	107
01-N4043	107
01-N4045	107
01-N4047	107
01-N4072	107
01-N4073	107
01-N4075	107
01-N4076	107
01-N4142	107
01-N4143	107
01-N4147	107
01-N4162	107
01-N4163	107
01-N4165	107
01-N4167	107
01-N8042	107
01-N8043	107
01-N8045	107
01-N8047	107
01-N8072	107
01-N8073	107
01-N8075	107
01-N8076	107
01-N8142	107
01-N8143	107
01-N8147	107
01-N8162	107
01-N8163	107
01-N8165	107
01-N8167	107
01-NA426	62
03-A4001	63
03-A8001	63
03-AA113	79
03-AA213	80
03-AA910	79
03-AA920	80
03-NA014	79
03-NA024	80
03-NAB26	79
03-PA910	79
03-PA911	79
03-PA919	79
03-PA920	80
03-PA921	80
03-PA929	80
03-P4041	61
03-P4051	61
03-P4061	61
03-P8041	61
03-P8051	61
03-P8061	61
03-PA910	79
03-A4001	63
03-A8001	63
06A000125M	212
06A0001	212
06A100125M	212
06A1001	212
06A300125M	212
06A3001	212
06A6001	212
06A600125M	212
06A7001	212
06A9001	212
06E1007	208
06E3007	208
06E4007	208
06E8007	208
07-A4001	63
07-A4001-SS	63
07-A8001	63
07-A8001-SS	63
07-AA113	79
07-AA213	80
07-AA910	79
07-AA920	80
07-NA014	79
07-NA024	80
07-NAB26	79
07-PA910	79
07-PA911	79
07-PA919	79
07-PA920	80
07-PA921	80
07-PA929	80
07-04041-SS	61
07-04051-SS	61
07-04061-SS	61
07-08041-SS	61
07-08051-SS	61
07-08061-SS	61
07-P4041	61
07-P4051	61
07-P4061	61
07-P8041	61
07-P8051	61
07-P8061	61
09-1AB26	100
09-NA010	109
09-NA010-B	109
09-NA010-T	109
09-NA011	109
09-NA014	109
09-NA019	109
09-NA020	110
09-NA020-B	110
09-NA020-T	110
09-NA021	110
09-NA024	110
09-NA029	110
09-NA583	109
09-NAB26	109
09-NAC26	109
09-NAJ26	109
09-NAN26	109
09-NAR26	109
09-2A010-185	109
09-2A010-185-B	109
09-2A010-185-T	109
09-2A011-185	109
09-2A014-185	109
09-2A019-185	109
09-2A020-185	110
09-2A020-185-B	110
09-2A020-185-T	110
09-2A021-185	110
09-2A024-185	110
09-2A029-185	110
09-2A583-185	109
09-24042-185	115
09-24043-185	115
09-24045-185	115
09-24047-185	115
09-24072-185	115
09-24073-185	115
09-24075-185	115
09-24076-185	115
09-24077-185	115
09-28042-185	115
09-28043-185	115
09-28045-185	115
09-28047-185	115
09-28072-185	115
09-28073-185	115
09-28075-185	115
09-28076-185	115
09-28077-185	115
09-N4042	107
09-N4043	107
09-N4045	107
09-N4047	107
09-N4072	107
09-N4073	107
09-N4075	107
09-N4076	107
09-N4142	107
09-N4143	107
09-N4147	107
09-N4162	107
09-N4163	107
09-N4165	107
09-N4167	107
09-N8042	107
09-N8043	107
09-N8045	107
09-N8047	107
09-N8072	107
09-N8073	107
09-N8075	107
09-N8076	107
09-N8142	107
09-N8143	107
09-N8147	107
09-N8162	107
09-N8163	107
09-N8165	107
09-N8167	107
1513016	86
1513026	86
1513046	86
1513056	86
1516016	86
1516026	86
1516046	86
1516056	86
151A053-1	86
151A125	86
151ALED-24J	86
1533036	86
1536036	86
15C3016	86
15C3026	86
15C3036	86
15C3046	86
15C3056	86
17-1A014	79
17-1A024	80
17-1A711	79
17-1A721	80
17-1A910	79
17-1A911	79
17-1A919	79
17-1A920	80
17-1A921	80
17-1A925	80

PART NUMBER	PG
17-1A929	80
17-1AB26	79
17-14051	71
17-14060	71
17-14061	71
17-14070	71
17-14071	71
17-14080	71
17-14081	71
17-14090	71
17-18051	71
17-18060	71
17-18061	71
17-18070	71
17-18071	71
17-18080	71
17-18081	71
17-18090	71
17-6A014	79
17-6A024	80
17-6A711	79
17-6A721	80
17-6A910	79
17-6A911	79
17-6A919	79
17-6A920	80
17-6A921	80
17-6A925	80
17-6A929	80
17-6AB26	79
17-64091	73
17-64100	73
17-64101	73
17-64110	73
17-64111	73
17-64120	73
17-64121	73
17-64130	73
17-64131	73
17-64140	73
17-64141	73
17-64150	73
17-64151	73
17-64160	73
17-64161	73
17-64170	73

PART NUMBER	PG
17-64171	73
17-64180	73
17-64181	73
17-64190	73
17-64191	73
17-64200	73
17-68091	73
17-68100	73
17-68101	73
17-68110	73
17-68111	73
17-68120	73
17-68121	73
17-68130	73
17-68131	73
17-68140	73
17-68141	73
17-68150	73
17-68151	73
17-68160	73
17-68161	73
17-68170	73
17-68171	73
17-68180	73
17-68181	73
17-68190	73
17-68191	73
17-68200	73
19-1A126	72
19-6A126	74
22-14042	163
22-14043	163
22-14045	163
22-14047	163
22-14072	163
22-14073	163
22-14075	177
22-14076	163
22-14122-K16	163
22-14123-K16	163
22-14125-K16	163
22-14127-K16	163
22-14142	163
22-14143	163
22-14147	163
22-18042	163

PART NUMBER	PG
22-18043	163
22-18045	163
22-18047	163
22-18072	163
22-18073	163
22-18075	163
22-18076	163
22-18122-K16	163
22-18123-K16	163
22-18125-K16	163
22-18127-K16	163
22-18142	163
22-18143	163
22-18147	163
22-1A013-12	164
22-1A013-34	164
22-1A023-12-B	164
22-1A023-12-T	164
22-1A023-34-B	164
22-1A023-34-T	164
22-1A057	164
22-1A426	164
221C7BPA	164
221C7BPB	164
221C7BPJ	164
221C7CPC	164
221C7CPD	164
221C7DPE	164
221C7DPF	164
221C7N05	164
221C7N07	164
221C7N10	164
221C7N12	164
221C7N15	164
222C7BPA	166
222C7BPB	166
222C7BPJ	166
222C7CPC	166
222C7CPD	166
222C7DPE	166
222C7DPF	166
222C7N05	166
222C7N07	166
222C7N10	180
222C7N12	166
222C7N15	166

PART NUMBER	PG
22-34042	165
22-34043	165
22-34045	165
22-34047	165
22-34072	165
22-34073	165
22-34075	165
22-34076	165
22-34142	165
22-34143	165
22-34147	165
22-34162	165
22-34163	165
22-34165	165
22-34167	165
22-38042	165
22-38043	165
22-38045	165
22-38047	165
22-38072	165
22-38073	165
22-38075	165
22-38076	165
22-38142	165
22-38143	165
22-38147	165
22-38162	165
22-38163	165
22-38165	165
22-38167	165
22-3A013-1	166
22-3A013-34	166
22-3A013-114	166
22-3A023-34-B	166
22-3A023-34-T	166
22-3A027	166
22-3A426	166
223C7CPC	168
223C7CPD	168
223C7DPE	168
223C7DPF	168
223C7M40PG	168
223C7M40PH	168
223C7N05	168
223C7N07	168
223C7N10	168

PART NUMBER	PG
223C7N12	168
223C7N15	168
22-64042	167
22-64043	167
22-64045	167
22-64047	167
22-64072	167
22-64073	167
22-64075	167
22-64076	167
22-64142	167
22-64143	167
22-64147	167
22-64162	167
22-64163	167
22-64165	167
22-64167	167
22-68042	167
22-68043	167
22-68045	167
22-68047	167
22-68072	17
22-68073	167
22-68075	167
22-68076	167
22-68142	167
22-68143	167
22-68147	167
22-68162	167
22-68163	167
22-68165	167
22-68167	167
22-6A013-1	168
22-6A023-1-B	168
22-6A023-1-T	168
22-6A027	168
22-6A426	168
251A457-E	208
251P0BPA	164
251P0BPB	164
251P0CPC	164
251P0CPD	164
252P0CPC	166
252P0CPD	166
252P0DPE	166
252P0DPF	166

PARTS INDEX

PART NUMBER	PG
253P0DPE	168
253P0DPF	168
2620042	201
2620043	201
2620045	201
2620047	201
2620072	201
2620073	201
2620075	201
2620076	201
2620143	201
2620162	201
2620163	201
2620165	201
2620167	201
2621042	201
2621043	201
2621045	201
2621047	201
2621072	201
2621073	201
2621075	201
2621076	201
2621143	201
2621162	201
2621163	201
2621165	201
2621167	201
2623042	201
2623043	201
2623045	201
2623047	201
2623072	201
2623073	201
2623075	201
2623076	201
2623143	201
2623162	201
2623163	201
2623165	201
2623167	201
2624042	201
2624043	201
2624045	201
2624047	201
2624072	201

PART NUMBER	PG
2624073	201
2624075	201
2624076	201
2624143	201
2624162	201
2624163	201
2624165	201
2624167	201
2626042	201
2626043	201
2626045	201
2626047	201
2626072	201
2626073	201
2626075	201
2626076	201
2626143	201
2626162	201
2626163	201
2626165	201
2626167	201
262A0231	201
262A02312	201
262A02334	201
262A926	201
2630042	202
2630043	202
2630045	202
2630047	202
2630072	202
2630073	202
2630075	202
2630076	202
2630143	202
2630162	202
2630163	202
2630165	202
2630167	202
2631042	202
2631043	202
2631045	202
2631047	202
2631072	202
2631073	202
2631075	202
2631076	202

PART NUMBER	PG
2631143	202
2631162	202
2631163	202
2631165	202
2631167	202
2633042	202
2633043	202
2633045	202
2633047	202
2633072	202
2633073	202
2633075	202
2633076	202
2633143	202
2633162	202
2633163	202
2633165	202
2633167	202
2634042	202
2634043	202
2634045	202
2634047	202
2634072	202
2634075	202
2634076	202
2634143	202
2634162	202
2634163	202
2634165	202
2634167	202
2636042	202
2636043	202
2636045	202
2636047	202
2636072	202
2636073	210
2636075	202
2636076	202
2636143	202
2636162	202
2636163	202
2636165	202
2636167	202
263A0231	202
263A02312	202
263A02334	202

PART NUMBER	PG
263A926	202
2660042	203
2660043	203
2660045	203
2660047	203
2660072	203
2660073	203
2660075	203
2660076	203
2660143	203
2660162	203
2660163	203
2660165	203
2660167	203
2661042	203
2661043	203
2661045	203
2661047	203
2661072	203
2661073	203
2661075	203
2661076	203
2661143	203
2661162	203
2661163	203
2661165	203
2661167	203
2663042	203
2663043	203
2663045	203
2663047	203
2663072	203
2663073	203
2663075	203
2663076	203
2663143	203
2663162	203
2663163	203
2663165	203
2663167	203
2664042	203
2664043	203
2664045	203
2664047	203
2664072	203
2664073	203

PART NUMBER	PG
2664075	203
2664143	203
2664162	203
2664163	203
2664165	203
2664167	203
2666042	203
2666043	203
2666045	203
2666047	203
2666072	203
2666073	203
2666075	203
2666076	203
2666143	203
2666162	203
2666163	203
2666165	203
2666167	203
266A0231	203
266A023112	203
266A023114	203
266A0232	203
266A926	203
2690042	218
2690043	218
2690045	218
2690047	218
2690072	218
2690073	218
2690075	218
2690076	218
2690143	218
2690162	218
2690163	218
2690165	218
2690167	218
2691042	218
2691043	218
2691045	218
2691047	218
2691072	218
2691073	218
2691075	218
2691076	218
2691143	218

PART NUMBER	PG
2691162	218
2691163	218
2691165	204
2691167	204
2693042	204
2693043	204
2693045	204
2693047	204
2693072	204
2693073	204
2693075	204
2693076	204
2693143	204
2693162	204
2693163	204
2693165	204
2693167	204
2694042	204
2694043	204
2694045	204
2694047	204
2694072	204
2694073	204
2694075	204
2694076	204
2694143	204
2694162	204
2694163	204
2694165	204
2694167	204
2696042	204
2696043	204
2696045	204
2696047	204
2696072	204
2696073	204
2696075	204
2696076	204
2696143	204
2696162	204
2696163	204
2696165	204
2696167	204
269A0231	204
269A023112	204
269A023114	204

PART NUMBER	PG
269A0232	204
269A926	204
28-A0042	174
28-A0043	174
28-A0045	174
28-A0047	174
28-A0072	174
28-A0073	174
28-A0075	174
28-A0076	174
28-A0142	174
28-A0143	174
28-A0147	174
28-A0162	174
28-A0163	174
28-A0165	174
28-A0167	174
28-A1042	173
28-A1043	173
28-A1045	173
28-A1047	173
28-A1072	173
28-A1073	173
28-A1075	173
28-A1076	173
28-A1142	173
28-A1143	173
28-A1147	173
28-A1162	173
28-A1163	173
28-A1165	173
28-A1167	173
28-A3042	173
28-A3043	173
28-A3045	173
28-A3047	173
28-A3072	173
28-A3073	173
28-A3075	173
28-A3076	173
28-A3142	173
28-A3143	173
28-A3147	173
28-A3162	173
28-A3163	173
28-A3165	173

PART NUMBER	PG
28-A3167	173
28-A4042	173
28-A4043	173
28-A4045	173
28-A4047	173
28-A4072	173
28-A4073	173
28-A4075	173
28-A4076	173
28-A4142	173
28-A4143	173
28-A4147	173
28-A4162	173
28-A4163	173
28-A4165	173
28-A4167	173
28-A6042	174
28-A6043	174
28-A6045	174
28-A6047	174
28-A6072	174
28-A6073	174
28-A6075	174
28-A6076	174
28-A6142	174
28-A6143	174
28-A6147	174
28-A6162	174
28-A6163	174
28-A6165	174
28-A6167	174
28-A7042	174
28-A7043	174
28-A7045	174
28-A7047	174
28-A7072	174
28-A7073	174
28-A7075	174
28-A7076	174
28-A7142	174
28-A7143	174
28-A7147	174
28-A7162	174
28-A7163	174
28-A7165	174
28-A7167	174

PART NUMBER	PG
28-A8042	173
28-A8043	173
28-A8045	173
28-A8047	173
28-A8072	173
28-A8073	173
28-A8075	173
28-A8076	173
28-A8142	173
28-A8143	173
28-A8147	173
28-A8162	173
28-A8163	173
28-A8165	173
28-A8167	173
28-A9042	174
28-A9043	174
28-A9045	174
28-A9047	174
28-A9072	174
28-A9073	174
28-A9075	174
28-A9076	174
28-A9142	174
28-A9143	174
28-A9147	174
28-A9162	174
28-A9163	174
28-A9165	174
28-A9167	174
31-1A010	101
31-1A010-B	101
31-1A010-T	101
31-1A011	101
31-1A011-972	101
31-1A014	101
31-1A019	101
31-1A020	101
31-1A020-B	102
31-1A020-T	102
31-1A021	102
31-1A021-972	102
31-1A024	102
31-1A029	102
31-1A056	101
31-1A125	102

PART NUMBER	PG
31-1A226	44
31-1A426	44
31-1A583	101
31-1A824	102
31-1A924	102
31-1AB26	101
31-1AC26	101
31-1AJ26	101
31-1AN26	101
31-1AR26	101
31-14172-K07	91
31-14173-K07	91
31-14175-K07	91
31-14176-K07	91
31-14182-K14	91
31-14183-K14	91
31-14187-K14	91
31-14232-K16	91
31-14233-K16	91
31-14235-K16	91
31-14237-K16	91
31-14242-K04	91
31-14243-K04	91
31-14245-K04	91
31-14247-K04	91
31-18172-K07	91
31-18173-K07	91
31-18175-K07	91
31-18176-K07	91
31-18182-K14	91
31-18183-K14	91
31-18187-K14	91
31-18232-K16	91
31-18233-K16	91
31-18235-K16	91
31-18237-K16	91
31-18242-K04	91
31-18243-K04	91
31-18245-K04	91
31-18247-K04	91
31-3A010	101
31-3A010-B	101
31-3A010-T	101
31-3A011	101
31-3A011-972	101
31-3A014	101

PARTS INDEX

PART NUMBER	PG
31-3A019	101
31-3A020-T	102
31-3A021	102
31-3A021-972	102
31-3A024	102
31-3A029	102
31-3A056	101
31-3A125	102
31-3A226	46
31-3A320	102
31-3A426	46
31-3A583	101
31-3A824	102
31-3A924	102
31-3AB26	101
31-3AC26	101
31-3AJ26	101
31-3AN26	101
31-3AR26	101
31-34172-K07	93
31-34173-K07	93
31-34175-K07	93
31-34176-K07	93
31-34182-K14	93
31-34183-K14	93
31-34187-K14	93
31-34232-K16	93
31-34233-K16	93
31-34235-K16	93
31-34237-K16	93
31-34242-K04	93
31-34243-K04	93
31-34245-K04	93
31-34247-K04	93
31-34931	77
31-34940	77
31-34941	77
31-34950	77
31-34951	77
31-34960	77
31-34961	77
31-34970	77
31-38172-K07	93
31-38173-K07	93
31-38175-K07	93
31-38176-K07	93
31-38182-K14	93
31-38183-K14	93
31-38187-K14	93
31-38232-K16	93
31-38233-K16	93
31-38235-K16	93
31-38237-K16	93
31-38242-K04	93
31-38243-K04	93
31-38245-K04	93
31-38247-K04	93
31-38931	77
31-38940	77
31-38941	77
31-38950	77
31-38951	77
31-38960	77
31-38961	77
31-38970	77
31-3A824	102
31-6A010	101
31-6A010-B	101
31-6A010-T	101
31-6A011	101
31-6A011-972	101
31-6A014	101
31-6A019	101
31-6A020	102
31-6A020-B	102
31-6A020-T	102
31-6A021	102
31-6A021-972	102
31-6A024	102
31-6A029	102
31-6A125	102
31-6A226	34
31-6A346	34
31-6A426	34
31-6A583	101
31-6A824	102
31-6A924	102
31-6AB26	101
31-6AC26	101
31-6AJ26	101
31-6AN26	101
31-6AR26	101
3164001P80	151
3164001P88	151
3164002P80	151
3164002P88	151
3164003P80	151
3164003P88	151
316400MP80	151
316400NP80	151
316400NP88	151
316400PP80	151
316400TP80	151
3164001843P80	151
3164001843P88	151
3164002843P80	151
3164002843P88	151
3164003843P80	151
3164003843P88	151
316400M843P80	151
316400N843P80	151
316400N843P88	151
316400P843P80	151
316400T843P80	151
3164001858P80	151
3164001858P88	151
3164002858P80	151
3164002858P88	151
3164003858P80	151
3164003858P88	151
316400M858P80	151
316400N858P80	151
316400N858P88	151
316400P858P80	151
316400T858P80	151
31-64172-K07	95
31-64173-K07	95
31-64175-K07	95
31-64176-K07	95
31-64182-K14	95
31-64183-K14	95
31-64187-K14	95
31-64232-K16	95
31-64233-K16	95
31-64235-K16	95
31-64237-K16	95
31-64242-K04	95
31-64243-K04	95
31-64245-K04	95
31-64247-K04	95
3168001P80	151
3168001P88	151
3168002P80	151
3168002P88	151
3168003P80	151
3168003P88	151
316800MP80	151
316800NP80	151
316800NP88	151
316800PP80	151
316800TP80	151
3168001843P80	151
3168001843P88	151
3168002843P80	151
3168002843P88	151
3168003843P80	151
3168003843P88	151
316800M843P80	151
316800N843P80	151
316800N843P88	151
316800P843P80	151
316800T843P80	151
31-68172-K07	95
31-68173-K07	95
31-68175-K07	95
31-68176-K07	95
31-68182-K14	95
31-68183-K14	95
31-68187-K14	95
31-68232-K16	95
31-68233-K16	95
31-68235-K16	95
31-68237-K16	95
31-68242-K04	95
31-68243-K04	95
31-68245-K04	95
31-68247-K04	95
31-6A014	101
31-6A024	102
31-9A010	101
31-9A010-B	101
31-9A010-T	101
31-9A011	101
31-9A011-972	101
31-9A014	101
31-9A019	101
31-9A020	102
31-9A020-B	102
31-9A020-T	102
31-9A021	102
31-9A021-972	102
31-9A024	102
31-9A029	102
31-9A125	102
31-9A426	36
31-9A583	101
31-9A726	102
31-9A824	102
31-9A924	102
31-9AB26	101
31-9AC26	101
31-9AJ26	101
31-9AN26	101
31-9AR26	101
31-9A583	101
31-94172-K07	97
31-94173-K07	97
31-94175-K07	97
31-94176-K07	97
31-94182-K14	97
31-94183-K14	97
31-94187-K14	97
31-94232-K16	97
31-94233-K16	97
31-94235-K16	97
31-94237-K16	97
31-94242-K04	97
31-94243-K04	97
31-94245-K04	97
31-94247-K04	97
31-98172-K07	97
31-98173-K07	97
31-98175-K07	97
31-98176-K07	97
31-98182-K14	97
31-98183-K14	97
31-98187-K14	97
31-98232-K16	97
31-98233-K16	97
31-98235-K16	97

PART NUMBER	PG
31-98237-K16	97
31-98242-K04	97
31-98243-K04	97
31-98245-K04	97
31-98247-K04	97
31-9A426	98
33-1A010	53
33-1A010-B	53
33-1A010-T	53
33-1A583	53
33-1A011	53
33-1A011-972	53
33-1A014	53
33-1A019	53
33-1A020	54
33-1A020-B	54
33-1A020-T	54
33-1A021	54
33-1A021-972	54
33-1A024	54
33-1A029	54
33-1A024	54
33-1A056	53
33-1AB26	53
33-1AC26	53
33-1AJ26	53
33-1AN26	53
33-1AR26	53
33-1A125	54
33-1A824	54
33-1A924	54
33-11043-MTR	233
33-11043-MVI	234
33-11073-MTR	233
33-11073-MVI	234
33-11143-MTR	233
33-11143-MVI	234
33-11163-MTR	233
33-11163-MVI	234
33-14042	43
33-14043	43
33-14045	43
33-14047	43
33-14058-S82	119
33-14072	43
33-14073	43

PART NUMBER	PG
33-14075	43
33-14076	43
33-14109	119
33-14142	43
33-14143	43
33-14147	43
33-14158-S69	119
33-14162	43
33-14163	43
33-14165	43
33-14167	43
33-14209	119
33-18042	43
33-18043	43
33-18045	43
33-18047	43
33-18058-S82	119
33-18072	43
33-18073	43
33-18075	43
33-18076	43
33-18109	119
33-18142	43
33-18143	43
33-18147	43
33-18158-S69	119
33-18162	43
33-18163	43
33-18165	43
33-18167	43
33-18209	119
33-3A010	53
33-3A010-B	53
33-3A010-T	53
33-3A011	53
33-3A011-972	53
33-3A019	53
33-3A020	54
33-3A020-B	54
33-3A020-T	54
33-3A021	54
33-3A021-972	54
33-3A024	54
33-3A029	54
33-3A910-263	79
33-3A911	79

PART NUMBER	PG
33-3A911-172	79
33-3A919	79
33-3A920-263	80
33-3A921	80
33-3A921-172	80
33-3A929	80
33-3AB26	53
33-3AC26	53
33-3AJ26	53
33-3AN26	53
33-3AR26	53
33-3A014	53
33-3A056	53
33-3A125	54
33-3A583	54
33-3A824	54
33-3A924	54
33-31043-MTR	233
33-31043-MVI	234
33-31073-MTR	233
33-31073-MVI	234
33-31143-MTR	233
33-31143-MVI	234
33-31163-MTR	233
33-31163-MVI	234
33-34042	45
33-34043	45
33-34045	45
33-34047	45
33-34058-S82	119
33-34072	45
33-34073	45
33-34075	45
33-34076	45
33-34109	119
33-34142	45
33-34143	45
33-34147	45
33-34158-S69	119
33-34162	45
33-34163	45
33-34165	45
33-34167	45
33-34209	119
33-34531	75
33-34540	75

PART NUMBER	PG
33-34541	75
33-34550	75
33-34551	75
33-34560	75
33-34561	75
33-34570	75
33-38042	45
33-38043	45
33-38045	45
33-38047	45
33-38058-S82	119
33-38072	45
33-38073	45
33-38075	45
33-38076	45
33-38109	119
33-38142	45
33-38143	45
33-38147	45
33-38158-S69	119
33-38162	45
33-38163	45
33-38165	45
33-38167	45
33-38209	119
33-38531	75
33-38540	75
33-38541	75
33-38550	75
33-38551	75
33-38560	75
33-38561	75
33-38570	75
33-6A010	53
33-6A010-B	53
33-6A010-T	53
33-6A011	53
33-6A011-972	53
33-6A014	53
33-6A019	53
33-6A020	54
33-6A020-B	54
33-6A020-T	54
33-6A021	54
33-6A021-972	54
33-6A024	54

PART NUMBER	PG
33-6A029	54
33-6A125	54
33-6A583	53
33-6A824	54
33-6A924	54
33-6AB26	53
33-6AC26	53
33-6AJ26	53
33-6AN26	53
33-6AR26	53
33-61043-MTR	233
33-61043-MVI	234
33-61073-MTR	233
33-61073-MVI	234
33-61143-MTR	233
33-61143-MVI	234
33-61163-MTR	233
33-61163-MVI	234
33-64042	47
33-64043	47
33-64045	47
33-64047	47
33-64058-S82	119
33-64072	47
33-64073	47
33-64075	47
33-64076	47
33-64109	119
33-64142	47
33-64143	47
33-64147	47
33-64158-S69	119
33-64162	47
33-64163	47
33-64165	47
33-64167	47
33-64209	119
33-68042	47
33-68043	47
33-68045	47
33-68047	47
33-68058-S82	119
33-68072	47
33-68073	47
33-68075	47
33-68076	47

PARTS INDEX

PART NUMBER	PG
33-68109	119
33-68142	47
33-68143	47
33-68147	47
33-68158-S69	119
33-68162	47
33-68163	47
33-68165	47
33-68167	47
33-68209	119
33-9A010	53
33-9A010-B	53
33-9A010-T	53
33-9A011	53
33-9A011-972	53
33-9A014	53
33-9A019	53
33-9A020	54
33-9A020-B	54
33-9A020-T	54
33-9A021	54
33-9A021-972	54
33-9A024	54
33-9A029	54
33-9AB26	53
33-9AC26	53
33-9AJ26	53
33-9AN26	53
33-9AR26	53
33-9A125	54
33-9A583	53
33-9A824	54
33-9A924	54
33-9A726	54
33-91043-MTR	233
33-91043-MVI	234
33-91073-MTR	233
33-91073-MVI	234
33-91143-MTR	233
33-91143-MVI	234
33-91163-MTR	233
33-91163-MVI	234
33-94042	49
33-94043	49
33-94045	49
33-94047	49

PART NUMBER	PG
33-94058-S82	119
33-94072	49
33-94073	49
33-94075	49
33-94076	49
33-94109	119
33-94142	49
33-94143	49
33-94147	49
33-94162	49
33-94163	49
33-94165	49
33-94167	49
33-94209	119
33-98042	49
33-98043	49
33-98045	49
33-98047	49
33-98058-S82	119
33-98072	49
33-98073	49
33-98075	49
33-98076	49
33-98109	119
33-98142	49
33-98143	49
33-98147	49
33-98162	49
33-98163	49
33-98165	49
33-98167	49
33-98209	119
35-14042-HAZ	191
35-14043-HAZ	191
35-14045-HAZ	191
35-14047-HAZ	191
35-14072-HAZ	191
35-14073-HAZ	191
35-14075-HAZ	191
35-14076-HAZ	191
35-14109-HAZ	195
35-14142-HAZ	191
35-14143-HAZ	191
35-14147-HAZ	191
35-14162-HAZ	191
35-14163-HAZ	191

PART NUMBER	PG
35-14165-HAZ	177
35-14167-HAZ	177
35-14172-K07-HAZ	189
35-14173-K07-HAZ	189
35-14175-K07-HAZ	189
35-14176-K07-HAZ	189
35-14182-K14-HAZ	189
35-14183-K14-HAZ	189
35-14187-K14-HAZ	189
35-14209-HAZ	195
35-14232-K16-HAZ	189
35-14233-K16-HAZ	189
35-14235-K16-HAZ	189
35-14237-K16-HAZ	189
35-14242-K04-HAZ	189
35-14243-K04-HAZ	189
35-14245-K04-HAZ	189
35-14247-K04-HAZ	189
35-18042-HAZ	177
35-18043-HAZ	177
35-18045-HAZ	177
35-18047-HAZ	177
35-18072-HAZ	177
35-18073-HAZ	177
35-18075-HAZ	177
35-18076-HAZ	177
35-18109-HAZ	195
35-18142-HAZ	177
35-18143-HAZ	177
35-18147-HAZ	177
35-18162-HAZ	177
35-18163-HAZ	177
35-18165-HAZ	177
35-18167-HAZ	177
35-18172-K07-HAZ	189
35-18173-K07-HAZ	189
35-18175-K07-HAZ	189
35-18176-K07-HAZ	189
35-18182-K14-HAZ	189
35-18183-K07-HAZ	189
35-18187-K07-HAZ	189
35-18209-HAZ	195
35-18232-K16-HAZ	189
35-18233-K16-HAZ	189
35-18235-K16-HAZ	189
35-18237-K16-HAZ	189

PART NUMBER	PG
35-18242-K04-HAZ	189
35-18243-K04-HAZ	189
35-18245-K04-HAZ	189
35-18247-K04-HAZ	189
35-34042-HAZ	179
35-34043-HAZ	179
35-34045-HAZ	179
35-34047-HAZ	179
35-34072-HAZ	179
35-34073-HAZ	179
35-34075-HAZ	179
35-34076-HAZ	179
35-34109-HAZ	195
35-34142-HAZ	179
35-34143-HAZ	179
35-34147-HAZ	179
35-34162-HAZ	179
35-34163-HAZ	179
35-34165-HAZ	179
35-34167-HAZ	179
35-34172-K07-HAZ	205
35-34173-K07-HAZ	205
35-34175-K07-HAZ	205
35-34176-K07-HAZ	205
35-34182-K14-HAZ	205
35-34183-K14-HAZ	205
35-34187-K14-HAZ	205
35-34209-HAZ	195
35-34232-K16-HAZ	205
35-34233-K16-HAZ	205
35-34235-K16-HAZ	205
35-34237-K16-HAZ	205
35-34242-K04-HAZ	205
35-34243-K04-HAZ	205
35-34245-K04-HAZ	205
35-34247-K04-HAZ	205
35-38042-HAZ	179
35-38043-HAZ	179
35-38045-HAZ	179
35-38047-HAZ	179
35-38072-HAZ	179
35-38073-HAZ	179
35-38075-HAZ	179
35-38076-HAZ	179
35-38109-HAZ	195
35-38142-HAZ	179

PART NUMBER	PG
35-38143-HAZ	179
35-38147-HAZ	179
35-38162-HAZ	179
35-38163-HAZ	179
35-38165-HAZ	179
35-38167-HAZ	179
35-38172-K07-HAZ	205
35-38173-K07-HAZ	205
35-38175-K07-HAZ	205
35-38176-K07-HAZ	205
35-38182-K14-HAZ	205
35-38183-K14-HAZ	205
35-38187-K14-HAZ	205
35-38209-HAZ	195
35-38232-K16-HAZ	205
35-38233-K16-HAZ	205
35-38235-K16-HAZ	205
35-38237-K16-HAZ	205
35-38242-K04-HAZ	205
35-38243-K04-HAZ	205
35-38245-K04-HAZ	205
35-38247-K04-HAZ	205
35-64109-HAZ	195
35-64172-C-K07-HAZ	183
35-64173-C-K07-HAZ	183
35-64175-C-K07-HAZ	183
35-64176-C-K07-HAZ	183
35-64182-C-K14-HAZ	183
35-64183-C-K14-HAZ	183
35-64187-C-K14-HAZ	183
35-64209-HAZ	195
35-64232-C-K16-HAZ	183
35-64233-C-K16-HAZ	183
35-64235-C-K16-HAZ	183
35-64237-C-K16-HAZ	183
35-64242-C-K04-HAZ	183
35-64243-C-K04-HAZ	183
35-64245-C-K04-HAZ	183
35-64247-C-K04-HAZ	183
35-68109-HAZ	195
35-68172-C-K07-HAZ	183
35-68173-C-K07-HAZ	183
35-68175-C-K07-HAZ	183
35-68176-C-K07-HAZ	183
35-68182-C-K14-HAZ	183
35-68183-C-K14-HAZ	183

PART NUMBER	PG
35-68187-C-K14-HAZ	183
35-68209-HAZ	195
35-68232-C-K16-HAZ	183
35-68233-C-K16-HAZ	183
35-68235-C-K16-HAZ	183
35-68237-C-K16-HAZ	183
35-68242-C-K04-HAZ	183
35-68243-C-K04-HAZ	183
35-68245-C-K04-HAZ	183
35-68247-C-K04-HAZ	183
36-24022-K14-HAZ	193
36-24023-K14-HAZ	193
36-24027-K14-HAZ	193
36-24032-K07-HAZ	193
36-24033-K07-HAZ	193
36-24035-K07-HAZ	193
36-24036-K07-HAZ	193
36-24042-HAZ	201
36-24043-HAZ	201
36-24045-HAZ	201
36-24047-HAZ	201
36-24072-HAZ	201
36-24073-HAZ	201
36-24075-HAZ	201
36-24076-HAZ	201
36-24109-HAZ	195
36-24142-HAZ	201
36-24143-HAZ	201
36-24147-HAZ	201
36-24162-HAZ	201
36-24163-HAZ	201
36-24165-HAZ	187
36-24167-HAZ	187
36-24209-HAZ	195
36-24232-K16-HAZ	193
36-24233-K16-HAZ	193
36-24235-K16-HAZ	193
36-24237-K16-HAZ	193
36-24242-K04-HAZ	193
36-24243-K04-HAZ	193
36-24245-K04-HAZ	193
36-24247-K04-HAZ	193
36-28022-K14-HAZ	193
36-28023-K14-HAZ	193
36-28027-K14-HAZ	193
36-28032-K07-HAZ	193

PART NUMBER	PG
36-28033-K07-HAZ	193
36-28035-K07-HAZ	193
36-28036-K07-HAZ	193
36-28042-HAZ	187
36-28043-HAZ	187
36-28045-HAZ	187
36-28047-HAZ	187
36-28072-HAZ	187
36-28073-HAZ	187
36-28075-HAZ	187
36-28076-HAZ	187
36-28109-HAZ	195
36-28142-HAZ	187
36-28143-HAZ	187
36-28147-HAZ	187
36-28162-HAZ	187
36-28163-HAZ	187
36-28165-HAZ	187
36-28167-HAZ	187
36-28209-HAZ	195
36-28232-K16-HAZ	193
36-28233-K16-HAZ	193
36-28235-K16-HAZ	193
36-28237-K16-HAZ	193
36-28242-K04-HAZ	193
36-28243-K04-HAZ	193
36-28245-K04-HAZ	193
36-28247-K04-HAZ	193
36-64042-HAZ	181
36-64043-HAZ	181
36-64045-HAZ	181
36-64047-HAZ	181
36-64072-HAZ	181
36-64073-HAZ	181
36-64075-HAZ	181
36-64076-HAZ	181
36-64109-HAZ	195
36-64142-HAZ	181
36-64143-HAZ	181
36-64147-HAZ	181
36-64162-HAZ	181
36-64163-HAZ	181
36-64165-HAZ	181
36-64167-HAZ	181
36-64172-C-K07-HAZ	183
36-64173-C-K07-HAZ	183

PART NUMBER	PG
36-64175-C-K07-HAZ	183
36-64176-C-K07-HAZ	183
36-64182-C-K14-HAZ	183
36-64183-C-K14-HAZ	183
36-64187-C-K14-HAZ	183
36-64209-HAZ	195
36-64232-C-K16-HAZ	183
36-64233-C-K16-HAZ	183
36-64235-C-K16-HAZ	183
36-64237-C-K16-HAZ	183
36-64242-C-K04-HAZ	183
36-64243-C-K04-HAZ	183
36-64245-C-K04-HAZ	183
36-64247-C-K04-HAZ	183
36-68042-HAZ	181
36-68043-HAZ	181
36-68045-HAZ	181
36-68047-HAZ	181
36-68072-HAZ	181
36-68073-HAZ	181
36-68075-HAZ	181
36-68076-HAZ	181
36-68109-HAZ	195
36-68142-HAZ	181
36-68143-HAZ	181
36-68147-HAZ	181
36-68162-HAZ	181
36-68163-HAZ	181
36-68165-HAZ	181
36-68167-HAZ	181
36-68172-C-K07-HAZ	183
36-68173-C-K07-HAZ	183
36-68175-C-K07-HAZ	183
36-68176-C-K07-HAZ	183
36-68182-C-K14-HAZ	183
36-68183-C-K14-HAZ	183
36-68187-C-K14-HAZ	183
36-68209-HAZ	195
36-68232-C-K16-HAZ	183
36-68233-C-K16-HAZ	183
36-68235-C-K16-HAZ	183
36-68237-C-K16-HAZ	183
36-68242-C-K04-HAZ	183
36-68243-C-K04-HAZ	183
36-68245-C-K04-HAZ	183
36-68247-C-K04-HAZ	183

PART NUMBER	PG
36-94109-HAZ	195
36-94209-HAZ	195
36-98109-HAZ	195
36-98209-HAZ	195
36C000332M	214
36C0003	214
36C100332M	214
36C1003	214
36C300332M	214
36C3003	214
36C600332M	214
36C6003	214
36C7003	214
36C9003	214
36D000232M	214
36D0002	214
36D100232M	214
36D1002	214
36D300232M	214
36D3002	214
36D600232M	214
36D6002	214
36D7002	214
36D9002	214
37-B4002-SS	67
37-B8002-SS	67
37-BA113	79
37-BA213	80
37-BA910-SS	79
37-BA920-SS	80
37-CA014-SS	79
37-CA024-SS	80
37-CA113	79
37-CA910-SS	79
37-CA920-SS	80
37-1A014-SS	79
37-1A024-SS	80
37-1A026-SS	79
37-2A010	53
37-2A010-B	53
37-2A010-T	53
37-2A583	53
37-2A011	53
37-2A011-972	53
37-2A014	53
37-2A019	53

PART NUMBER	PG
37-2A020	54
37-2A020-B	54
37-2A020-T	54
37-2A021	54
37-2A021-972	54
37-2A024	54
37-2A029	54
37-2AB26	53
37-2AC26	53
37-2AJ26	53
37-2AN26	53
37-2AR26	53
37-21043-MTR	233
37-21043-MVI	234
37-21073-MTR	233
37-21073-MVI	234
37-21143-MTR	233
37-21143-MVI	234
37-21163-MTR	233
37-21163-MVI	234
37-24042	51
37-24043	51
37-24045	51
37-24047	51
37-24058-S82	119
37-24072	51
37-24073	51
37-24075	51
37-24076	51
37-24109	119
37-24142	51
37-24143	51
37-24147	51
37-24162	51
37-24163	51
37-24165	51
37-24167	51
37-24209	119
37-28042	51
37-28043	51
37-28045	51
37-28047	51
37-28058-S82	119
37-28072	51
37-28073	51
37-28075	51

PARTS INDEX

PART NUMBER	PG
37-28076	51
37-28109	119
37-28142	51
37-28143	51
37-28147	51
37-28162	51
37-28163	51
37-28165	51
37-28167	51
37-28209	119
37-3AB26	79
37-34531	75
37-34540	75
37-34541	75
37-34550	75
37-34551	75
37-34560	75
37-34561	75
37-34570	75
37-38531	75
37-38541	75
37-38551	75
37-38561	75
37-6A010	53
37-6A010-B	53
37-6A010-T*	53
37-6A011	53
37-6A011-972	53
37-6A014	53
37-6A019	53
37-6A020	54
37-6A020-B	54
37-6A020-T	54
37-6A021	54
37-6A021-972	54
37-6A024	54
37-6A029	54
37-6AB26	53
37-6AC26	53
37-6AJ26	53
37-6AN26	53
37-6AR26	53
37-6A583	54
37-6A824	54
37-6A925	54
37-64042	47
37-64043	47

PART NUMBER	PG
37-64045	47
37-64047	47
37-64058-S82	119
37-64072	47
37-64073	47
37-64075	47
37-64076	47
37-64109	119
37-64142	47
37-64143	47
37-64147	47
37-64158-S69	119
37-64162	47
37-64163	47
37-64165	47
37-64167	47
37-64209	119
37-68042	47
37-68043	47
37-68045	47
37-68047	47
37-68058-S82	119
37-68072	47
37-68073	47
37-68075	47
37-68076	47
37-68109	119
37-68142	47
37-68143	47
37-68147	47
37-68158-S69	119
37-68162	47
37-68163	47
37-68165	47
37-68167	47
37-68209	119
37-9A010	53
37-9A010-B	53
37-9A010-T	53
37-9A583	53
37-9A011	53
37-9A011-972	53
37-9A019	53
37-9AB26	53
37-9AC26	53
37-9AJ26	53
37-9AN26	53

PART NUMBER	PG
37-9AR26	53
37-9A014	53
37-9A020	54
37-9A020-B	54
37-9A020-T	54
37-9A021	54
37-9A021-972	54
37-9A029	54
37-9A024	54
37-9A726	54
37-9A824	54
37-9A925	54
37-94042	49
37-94043	49
37-94045	49
37-94047	49
37-94072	49
37-94073	49
37-94075	49
37-94076	49
37-94109	119
37-94142	49
37-94143	49
37-94147	49
37-94162	49
37-94163	49
37-94165	49
37-94167	49
37-94209	119
37-98042	49
37-98043	49
37-98045	49
37-98047	49
37-98058-S82	117
37-98072	49
37-98073	49
37-98075	49
37-98076	49
37-98109	119
37-98142	49
37-98143	49
37-98147	49
37-98162	49
37-98163	49
37-98165	49
37-98167	49
37-98209	119

PART NUMBER	PG
37-B4002-SS	67
37-B8002-SS	67
37-C4003-SS	69
37-C8003-SS	69
39-2A010	101
39-2A010-B	101
39-2A010-T	101
39-2A011	101
39-2A011-972	101
39-2A014	101
39-2A019	101
39-2A020	102
39-2A020-B	102
39-2A020-T	102
39-2A021	102
39-2A021-972	102
39-2A024	102
39-2A029	102
39-2A426	52
39-2A583	101
39-2A726	102
39-2A824	102
39-2A925	102
39-2AB26	101
39-2AC26	101
39-2AJ26	101
39-2AN26	101
39-2AR26	101
39-24022-K14	99
39-24023-K14	99
39-24027-K14	99
39-24032-K07	99
39-24033-K07	99
39-24035-K07	99
39-24036-K07	99
39-24232-K16	99
39-24233-K16	99
39-24235-K16	99
39-24237-K16	99
39-24242-K04	99
39-24243-K04	99
39-24245-K04	99
39-24247-K04	99
39-28022-K14	99
39-28023-K14	99
39-28027-K14	99
39-28032-K07	99

PART NUMBER	PG
39-28033-K07	99
39-28035-K07	99
39-28036-K07	99
39-28232-K16	99
39-28233-K16	99
39-28235-K16	99
39-28237-K16	99
39-28242-K04	99
39-28243-K04	99
39-28245-K04	99
39-28247-K04	99
39-34940	77
39-34950	77
39-34960	77
39-34970	77
39-34931	77
39-34941	77
39-34951	77
39-34961	77
39-38940	77
39-38950	77
39-38960	77
39-38970	77
39-38931	77
39-38941	77
39-38951	77
39-38961	77
39-2A426	100
39-3A910-263	79
39-3A911	79
39-3A911-972	79
39-3A919	79
39-3A920-263	80
39-3A921	80
39-3A921172	80
39-3A929	80
39-44043-172	133
39-44073-172	133
39-44143-172	133
39-44163-172	133
39-48043-172	133
39-48073-172	133
39-48143-172	133
39-48163-172	133
39-6A010	101
39-6A010-B	101
39-6A010-T	101

PART NUMBER	PG
39-6A011	101
39-6A011-972	101
39-6A014	101
39-6A019	101
39-6A020	102
39-6A020-B	102
39-6A020-T	102
39-6A021	102
39-6A021-972	102
39-6A024	80
39-6A029	102
39-6A226	34
39-6A583	101
39-6A824	102
39-6A826	79
39-6A924	102
39-6A925	80
39-6AC26	101
39-6AJ26	101
39-6AN26	101
39-6AR26	101
39-64172-K07	95
39-64173-K07	95
39-64175-K07	95
39-64176-K07	95
39-64182-K14	95
39-64183-K14	95
39-64187-K14	95
39-64232-K16	95
39-64233-K16	95
39-64235-K16	95
39-64237-K16	95
39-64242-K04	95
39-64243-K04	95
39-64245-K04	95
39-64247-K04	95
39-68172-K07	95
39-68173-K07	95
39-68175-K07	95
39-68176-K07	95
39-68182-K14	95
39-68183-K14	95
39-68187-K14	95
39-68232-K16	95
39-68233-K16	95
39-68235-K16	95
39-68237-K16	95
39-68242-K04	95
39-68243-K04	95
39-68245-K04	95
39-68247-K04	96
39-9A010	101
39-9A010-B	101
39-9A010-T	101
39-9A011	101
39-9A011-972	101
39-9A014	101
39-9A019	101
39-9A020	102
39-9A020-B	102
39-9A020-T	102
39-9A021	102
39-9A021-972	102
39-9A024	102
39-9A029	102
39-9AB26	101
39-9AC26	101
39-9AJ26	101
39-9AN26	101
39-9AR26	101
39-9A583	101
39-9A726	102
39-9A824	102
39-9A925	102
39-94172-K07	97
39-94173-K07	97
39-94175-K07	97
39-94176-K07	97
39-94182-K14	97
39-94183-K14	97
39-94187-K14	97
39-94232-K16	97
39-94233-K16	97
39-94235-K16	97
39-94237-K16	97
39-94242-K04	97
39-94243-K04	97
39-94245-K04	97
39-94247-K04	97
39-98172-K07	97
39-98173-K07	97
39-98175-K07	97
39-98176-K07	97
39-98182-K14	97
39-98183-K14	97
39-98187-K14	97
39-98232-K16	97
39-98233-K16	97
39-98235-K16	97
39-98237-K16	97
39-98242-K04	97
39-98243-K04	97
39-98245-K04	97
39-98247-K04	97
416A023050	138
416A023550	138
416A023060	138
416A023560	138
416A023070	138
416A023570	138
416A023080	138
416A023580	138
416A023090	138
416A023590	138
416A12C	138
416A15C	138
416A18C	138
416A24C	138
416A70C	138
416A95C	138
4164043	137
416ALOCK	137
4164043L	138
4164043726	137
4164047726	137
4164043L26	138
4164047	137
4164047L	138
4164047726	137
416404L26	138
4164047L26	138
4164143L	138
4164143726	137
4164143L26	138
4164147	137
4164147L	138
4164147726	137
4164147L26	138
4164223	137
4164223L	138
4164223726	137
4164223L26	138
4164227	137
4164227L	138
4164227726	137
4164227L26	138
4168043	137
4168043L	138
4168043726	137
4168043L26	137
4168047	137
4168047L	138
4168047726	137
4168047L26	137
4168143	137
4168143L	138
4168143726	137
4168143L26	138
4168147	137
4168147L	138
4168147726	137
4168147L26	138
4168223	137
4168223L	138
4168223726	137
4168223L26	138
4168227	137
4168227L	138
4168227726	137
4168227L26	138
416ALOCK	137
42-41001-32P	217
42-41001-40P	217
42-41001-50P	217
42-41001-63P	217
42-41002-32P	217
42-41002-40P	217
42-41002-50P	217
42-41002-63P	217
42-41003-32P	217
42-41003-40P	217
42-41003-50P	217
42-41003-63P	217
42-4100M-32P	217
42-4100M-40P	217
42-4100M-50P	217
42-4100M-63P	217
42-4100N-32P	217
42-4100N-40P	217
42-4100N-50P	217
42-4100N-63P	217
42-4100P-32P	217
42-4100P-40P	217
42-4100P-50P	217
42-4100P-63P	217
42-4100T-32P	217
42-4100T-40P	217
42-4100T-50P	217
42-4100T-63P	217
42-47001	217
42-47002	217
42-47003	217
42-4700M	217
42-4700N	217
42-4700P	217
42-4700T	143
44-34001-P80	143
44-34001-P88	143
44-34002-P80	143
44-34002-P88	143
44-34003-P80	143
44-34003-P88	143
44-3400M-P80	143
44-3400N-P80	143
44-3400N-P88	143
44-3400P-P80	143
44-3400T-P80	143
44-38001-P80	143
44-38001-P88	143
44-38002-P80	143
44-38002-P88	143
44-38003-P80	143
44-38003-P88	143
44-3800M-P80	143
44-3800N-P80	143
443800NP88	143
44-3800P-P80	143
44-3800T-P80	143
44-38001-P88	143
44-38002-P88	143
44-38003-P88	143
44-3800N-P88	143
44-3A753-A	144
44-3A753-B	144
44-3A753-C	144

PARTS INDEX

PART NUMBER	PG
44-3A753-D	144
44-3A753-E	144
44-3A783-A	144
44-3A783-B	144
44-3A783-C	144
44-3A783-D	144
44-41001-P80	147
44-41002-P80	147
44-41003-P80	147
44-4100N-P80	147
44-4100T-P80	147
44-41001-P88	147
44-41002-P88	147
44-41003-P88	147
44-4100N-P88	147
44-4100P	147
44-4100M	147
44-43001-P80	147
44-43001-P88	147
44-43002-P80	147
44-43002-P88	147
44-43003-P80	147
44-43003-P88	147
44-4300N-P80	147
44-4300N-P88	147
44-4300T-P80	147
44-44001-P80	147
44-44001-P88	147
44-44002-P80	147
44-44002-P88	147
44-44003-P80	147
44-44003-P88	147
44-4400N-P80	147
44-4400N-P88	147
44-4400M	147
44-4400P	147
44-4400T-P80	147
44-47001-P80	147
44-47001-P88	147
44-47002-P80	147
44-47002-P88	147
44-47003-P80	147
44-47003-P88	147
44-4700N-P80	147
44-4700N-P88	147
44-4700T-P80	147

PART NUMBER	PG
44-48001-P80	147
44-48001-P88	147
44-48002-P80	147
44-48002-P88	147
44-48003-P80	147
44-48003-P88	147
44-4800N-P80	147
44-4800N-P88	147
44-4800T-P80	147
44-49001-P80	147
44-49001-P88	147
44-49002-P80	147
44-49002-P88	147
44-49003-P80	147
44-49003-P88	147
44-4900N-P80	147
44-4900N-P88	147
44-4900T-P80	147
453A027	144
453A126	144
453A396	144
453A540	144
453A753	144
453A783	144
454A12C	148
454A12D	148
454A15C	148
454A15D	148
454A18C	148
454A18D	148
454A24C	148
454A24D	148
454A30C	148
454A30D	148
454A376	148
454A396	148
454A40C	148
454A40D	148
454A50C	148
454A50D	148
454A70C	148
454A70D	148
454A753A	148
454A753B	148
454A753C	148
454A753D	148

PART NUMBER	PG
454A753E	148
454A783A	148
454A783B	148
454A783C	148
454A783D	148
454A876	148
454A95C	148
454A95D	148
47-34042	125
47-34043	125
47-34045	125
47-34046	125
47-34047	125
47-34142	125
47-34143	125
47-34145	125
47-34146	125
47-34147	125
47-38042	125
47-38043	125
47-38045	125
47-38046	125
47-38047	125
47-38142	125
47-38143	125
47-38145	125
47-38146	125
47-38147	126
47-3A010	129
47-3A011	129
47-3A011N	129
47-3A013-200	126
47-3A013-225	126
47-3A013-237	126
47-3A013-250	126
47-3A013-275	126
47-3A013-300	126
47-3A013-312	126
47-3A013-350	126
47-3A013-N20	126
47-3A013-N25	126
47-3A013-N30	126
47-3A014	129
47-3A019	129
47-3A020	129
47-3A021	129

PART NUMBER	PG
47-3A021N	129
47-3A024	129
47-3A029	129
47-3A126	126
47-3A913-200	126
47-3A913-225	126
47-3A913-237	126
47-3A913-250	126
47-3A913-275	126
47-3A913-300	126
47-3A913-312	126
47-3A913-335	126
47-3A913-N20	126
47-3A913-N25	126
47-3A913-N30	126
47-3A925	125
49-34042	125
49-34043	125
49-34045	125
49-34046	125
49-34047	125
49-34142	125
49-34143	125
49-34145	125
49-34146	125
49-34147	125
49-38042	125
49-38043	125
49-38045	125
49-38046	125
49-38047	125
49-38142	125
49-38143	125
49-38145	125
49-38146	125
49-38147	125
49-3A010	129
49-3A011	129
49-3A011N	129
49-3A013-200	126
49-3A013-225	126
49-3A013-237	126
49-3A013-250	126
49-3A013-275	126
49-3A013-300	126
49-3A013-312	126

PART NUMBER	PG
49-3A013-335	126
49-3A013-350	126
49-3A013-N20	126
49-3A013-N30	126
49-3A013-N25	126
49-3A013-N30	126
49-3A014	129
49-3A019	129
49-3A020	129
49-3A021	129
49-3A021N	129
49-3A024	129
49-3A029	129
49-3A126	126
49-3A925	125
49-44042	125
49-44043	125
49-44045	125
49-44046	125
49-44047	125
49-44142	125
49-44143	125
49-44145	125
49-44146	125
49-44147	125
49-48042	125
49-48043	125
49-48045	125
49-48046	125
49-48047	125
49-48142	125
49-48143	125
49-48145	125
49-48146	125
49-48147	125
49-4A010	129
49-4A011	129
49-4A011N	129
49-4A013-200	126
49-4A013-225	126
49-4A013-237	126
49-4A013-250	126
49-4A013-275	126
49-4A013-300	126
49-4A013-312	126
49-4A013-335	126

PART NUMBER	PG
49-4A013-350	126
49-4A013-N20	126
49-4A013-N25	126
49-4A013-N30	126
49-4A014	129
49-4A019	129
49-4A020	129
49-4A021	129
49-4A021N	129
49-4A024	129
49-4A029	129
49-4A126	126
49-4A913-N20	126
49-4A913-N25	126
49-4A913-N30	126
49-4A925	126
49-64042	125
49-64043	125
49-64045	125
49-64046	125
49-64047	125
49-64142	125
49-64143	125
49-64145	125
49-64146	125
49-64147	125
49-68042	125
49-68043	125
49-68045	125
49-68046	125
49-68047	125
49-68142	125
49-68143	125
49-68145	125
49-68146	125
49-68147	125
49-6A010	129
49-6A011	129
49-6A011N	129
49-6A013-200	126
49-6A013-237	126
49-6A013-275	126
49-6A013-300	126
49-6A013-312	126
49-6A013-335	126
49-6A013-350	126

PART NUMBER	PG
49-6A013-N20	126
49-6A013-N25	126
49-6A013-N30	126
49-6A014	129
49-6A019	129
49-6A020	129
49-6A021	129
49-6A021N	129
49-6A024	129
49-6A029	129
49-6A126	126
49-6A913-50	126
49-6A913-60	126
49-6A913-70	126
49-6A913-80	126
49-6A913-90	126
49-6A913-N20	126
49-6A913-N25	126
49-6A913-N30	126
49-6A925	126
4CN30	64
511B0N05	62
511B0N07	62
511B3N05	28
511B3N07	28
511C7000	28
511M3	28
511M7	28
511P0D18	28
511P0D21	28
511P0N05	28
511P0N07	28
511P0N10	28
511P6D18	28
512B3N05	30
512B3N07	30
512C7000	30
512M3	30
512M7	30
512P0D21	30
512P0N05	30
512P0N05E2615	30
512P0N07	30
512P0N07E2615	30
512P0N10	30
512P0N10E2615	30

PART NUMBER	PG
512P0N12	30
512P0N12E2615	30
513B3N05	32
513B3N07	32
513B3N10	32
513C7000	32
513M3	32
513M7	32
513P0D30	32
513P0D30473	32
513P0N05	32
513P0N07	32
513P0N10	32
513P0N12	32
514B3N05	34
514B3N07	34
514B3N10	34
514B3N12	34
514C7000	34
514M0-25	152
514M3	34
514M7	34
514P0D35	34
514P0D35473	34
514P0N05	34
514P0N07	34
514P0N10	34
514P0N12	34
514P0N15	36
515M3	36
515P0N07	36
515P0N10	36
515P0N12	36
515P0N15	36
515P0N20	36
516P0N10	52
516P0N12	52
516P0N15	52
516P0N20	52
516P0N25	52
51AA089	28
552M3	178
552P0D21	178
552P0N05	178
552P0N07	178
552P0N10	178

PART NUMBER	PG
552P0N12	178
553M3	180
553P0D30	180
553P0N05	180
553P0N07	180
553P0N10	180
553P0N12	180
554M3	182
554P0D20L	34
554P0D25L	34
554P0D35L	34
554P0D45L	34
554P0D49L	34
554P0N05	182
554P0N07	182
554P0N10	182
554P0N12	182
554P0N15	182
555P0D25	36
555P0D35	36
555P0D45	36
555P0D49	36
556P0D35	52
556P0D45	52
556P0D49	52
571B0N05185	116
571B0N07185	116
571M0	116
571M4185	116
571P020M185	116
571P025M185	116
571P032M185	116
571P0N05185	116
571P0N07185	116
571P0N10185	116
591B0N05	62
591B0N07	62
591M0	28
591M4	28
592M0	30
592M3	30
592P0N05	30
592P0N07	30
592P0N10	30
593M0	32
593M3	32

PART NUMBER	PG
593M7	32
593P0N05	32
593P0N07	32
593P0N10	32
593P0N12	32
594M0	34
594M3	34
594M7	34
594P0N05	34
594P0N07	34
594P0N10	34
594P0N12	34
594P0N15	34
595M0	36
595M3	36
595M7	36
595P0N07	36
595P0N10	36
595P0N12	36
595P0N15	36
595P0N20	36
596M0	34
596M6	52
596P0N10	52
596P0N12	52
596P0N15	52
596P0N20	52
596P0N25	52
596P0N30	52
597M6	52
5K2M0	178
5K2M3	178
5K2P0N05	178
5K2P0N07	178
5K2P0N10	178
5K3M0	180
5K3M3	180
5K3M7	180
5K3P0N05	180
5K3P0N07	180
5K3P0N10	180
5K3P0N12	180
5K4M0	182
5K4M3	182
5K4M7	182
5K4P0N05	182

PARTS INDEX

PART NUMBER	PG
5K4P0N07	182
5K4P0N10	182
5K4P0N12	182
5K4P0N15	182
5K5M0	200
5K5M3	200
5K5M7	200
5K5P0N07	186
5K5P0N10	186
5K5P0N12	186
5K5P0N15	186
5K5P0N20	186
5K6M0	188
5K6M6	188
5K6P0D50	52
5K6P0D60	52
5K6P0D70	52
5K6P0D80	52
5K6P0N10	188
5K6P0N12	188
5K6P0N15	188
5K6P0N15L	52
5K6P0N20	188
5K6P0N20L	52
5K6P0N25	188
5K6P0N25L	52
5K6P0N30	188
5K6P0N30L	52
5T7M0	134
5T7M6	134
5T7P0JT1	134
5T7P0JT2	134
5T7P0JT3	134
5T7P0KT1	134
5T7P0KT2	134
5T7P0N20	134
5T7P0N25	134
5T7P0N30	134
5T8P0D70	137
5T8P0D80	137
5T8P0D90	137
5T8P0D70	138
5T8P0D80	138
5T8P0D90	138
61-1A346	28
61-1A426	28
61-1A826	28
61-3A226	30
61-3A346	30
61-3A426	30
61-3A826	30
61-6A226	32
61-6A346	32
61-6A426	32
61-6A826	32
61CA113	214
61CA500	64
61-CA593	66
63-A4001	65
63-A8001	65
63-B4002	67
63-B8002	67
63-AA910	79
63-AA113	79
63-AA213	80
63-AA920	80
63-BA113	79
63-BA910	79
63-BA920	80
63-CA105	79
63-CA113	79
63-CA213	80
63-CA910	79
63-CA920	80
63-1AB26	37
63-1A010	37
63-1A010-B	37
63-1A010-T	79
63-1A011	37
63-1A014	37
63-1A019	37
63-1A020	38
63-1A020-B	38
63-1A020-T	38
63-1A021	38
63-1A024	38
63-1A029	38
63-1A105	79
63-1A125	38
63-1A305	80
63-1A583	37
63-1A824	38
63-1A924	38
63-1AB26	37
63-1AC26	37
63-1AJ26	37
63-1AN26	37
63-1AR26	37
63-11043-MTR	167
63-11043-MVI	168
63-11073-MTR	167
63-11073-MVI	168
63-11123-K16-MTR	167
63-11123-K16-MVI	168
63-11143-MTR	167
63-11143-MVI	168
63-14042	27
63-14043	27
63-14045	27
63-14047	27
63-14072	27
63-14073	27
63-14075	27
63-14076	27
63-14122-K16	27
63-14123-K16	27
63-14125-K16	27
63-14127-K16	27
63-14142	27
63-14143	27
63-14147	27
63-18042	27
63-18043	27
63-18045	27
63-18047	27
63-18072	27
63-18073	27
63-18075	27
63-18076	27
63-18122-K16	27
63-18123-K16	27
63-18125-K16	27
63-18127-K16	27
63-18142	27
63-18143	27
63-18147	37
63-3A010	37
63-3A010-B	37
63-3A010-T	37
63-3A583	37
63-3A011	37
63-3A011-972	37
63-3A019	37
63-3AB26	37
63-3AC26	37
63-3AJ26	37
63-3AN26	37
63-3AR26	37
63-3A014	38
63-3A020	38
63-3A020-B	38
63-3A020-T	38
63-3A021	38
63-3A021-972	38
63-3A024	38
63-3A029	38
63-3A105	79
63-3A125	38
63-3A305	80
63-3A824	38
63-3A924	38
63-31043-MTR	167
63-31043-MVI	168
63-31073-MTR	167
63-31073-MVI	168
63-31143-MTR	167
63-31143-MVI	168
63-31163-MTR	167
63-31163-MVI	168
63-34042	29
63-34043	29
63-34045	29
63-34047	29
63-34072	29
63-34073	29
63-34075	29
63-34076	29
63-34142	29
63-34143	29
63-34147	29
63-34162	29
63-34163	29
63-34165	29
63-34167	29
63-38042	29
63-38043	29
63-38045	29
63-38047	29
63-38072	29
63-38073	29
63-38075	29
63-38076	29
63-38142	29
63-38143	29
63-38147	29
63-38162	29
63-38163	29
63-38165	29
63-38167	30
63-6A010	37
63-6A010-B	37
63-6A010-T	37
63-6A011	37
63-6A011-972	37
63-6A019	37
63-6AJ26	37
63-6AC26	37
63-6AB26	37
63-6AR26	37
63-6AN26	37
63-6A014	37
63-6A020	38
63-6A020-B	38
63-6A020-T	38
63-6A021	38
63-6A021-972	38
63-6A024	38
63-6A029	38
63-6A125	80
63-6A305	80
63-6A583	37
63-6A824	38
63-6A924	38
63-6AB26	79
63-61043-MTR	167
63-61043-MVI	168
63-61073-MTR	167
63-61073-MVI	168
63-61143-MTR	167
63-61143-MVI	168
63-61163-MTR	167
63-61163-MVI	168
63-64042	31
63-64043	31

PART NUMBER	PG
63-64045	31
63-64047	31
63-64072	31
63-64073	31
63-64075	31
63-64076	31
63-64142	31
63-64143	31
63-64147	31
63-64162	31
63-64163	31
63-64165	31
63-64167	31
63-68042	31
63-68043	31
63-68045	31
63-68047	31
63-68072	31
63-68073	31
63-68075	31
63-68076	31
63-68142	31
63-68143	31
63-68147	31
63-68162	31
63-68163	31
63-68165	31
63-68167	37
63-8A010	37
63-8A010-B	37
63-8A010-T	37
63-8A011	37
63-8A011-972	37
63-8A014	38
63-8A019	37
63-8A020	38
63-8A020-B	38
63-8A020-T	38
63-8A021	38
63-8A021-972	38
63-8A024	38
63-8A029	38
63-8A125	38
63-8A583	37
63-8A924	38
63-8AB26	37
63-8AC26	37

PART NUMBER	PG
36-8AJ26	37
63-8AN26	37
63-8AR26	37
63-81043-MTR	167
63-81043-MVI	168
63-81073-MTR	167
63-81073-MVI	168
63-81143-MTR	167
63-81143-MVI	168
63-81163-MTR	167
63-81163-MVI	168
63-84042	33
63-84043	33
63-84045	33
63-84047	33
63-84072	33
63-84073	33
63-84075	33
63-84076	33
63-84142	33
63-84143	33
63-84147	33
63-84162	33
63-84163	33
63-84165	33
63-84167	33
63-88042	33
63-88043	33
63-88045	33
63-88047	33
63-88072	33
63-88073	33
63-88075	33
63-88076	37
63-88142	33
63-88143	33
63-88147	33
63-88162	33
63-88163	33
63-88165	33
63-88167	33
63-9A010	37
63-9A010-B	37
63-9A010-T	37
63-9A011	37
63-9A011-972	37
63-9A014	38

PART NUMBER	PG
63-9A019	37
63-9A020	38
63-9A020-B	38
63-9A020-T	38
63-9A021	38
63-9A021-972	38
63-9A024	38
63-9A029	38
63-9A125	38
63-9A583	37
63-9A726	35
63-9A824	38
63-9A924	38
63-9AB26	37
63-9AC26	37
63-9AJ26	37
63-9AN26	37
63-9AR26	37
63-91043-MTR	167
63-91043-MVI	168
63-91073-MTR	167
63-91073-MVI	168
63-91143-MTR	167
63-91143-MVI	168
63-91163-MTR	167
63-91163-MVI	168
63-94042	35
63-94043	35
63-94045	35
63-94047	35
63-94072	35
63-94073	35
63-94075	35
63-94076	35
63-94142	35
63-94143	35
63-94147	35
63-94162	35
63-94163	35
63-94165	35
63-94167	35
63-98042	35
63-98043	35
63-98045	35
63-98047	35
63-98072	35

PART NUMBER	PG
63-98073	35
63-98075	35
63-98076	65
63-98142	35
63-98143	35
63-98147	35
63-98162	35
63-98163	35
63-98165	35
63-98167	35
63-A4001	65
63-A8001	65
63-B4002	67
63-B8002	67
63-C4003	69
63-C8003	69
66-94042-HAZ	185
66-94043-HAZ	185
66-94045-HAZ	185
66-94047-HAZ	185
66-94072-HAZ	185
66-94073-HAZ	185
66-94075-HAZ	185
66-94076-HAZ	185
66-94142-HAZ	185
66-94143-HAZ	185
66-94147-HAZ	185
66-94162-HAZ	185
66-94163-HAZ	185
66-94165-HAZ	185
66-94167-HAZ	185
66-98042-HAZ	185
66-98043-HAZ	185
66-98045-HAZ	185
66-98047-HAZ	185
66-98072-HAZ	185
66-98073-HAZ	185
66-98075-HAZ	185
66-98076-HAZ	185
66-98142-HAZ	185
66-98143-HAZ	185
66-98147-HAZ	185
66-98162-HAZ	185
66-98163-HAZ	185
66-98165-HAZ	185
66-98167-HAZ	185

PART NUMBER	PG
67-8A010*	37
67-8A010-B	37
67-8A010-T	37
67-8A011	37
67-8A011-972	37
67-8A014	37
67-8A019	37
67-8A020	38
67-8A020-B	38
67-8A020-T	38
67-8A021	38
67-8A021-972	38
67-8A024	38
67-8A029	38
67-8A583	37
67-8A824	38
67-8A925	38
67-8AB26	37
67-8AC26	37
67-8AJ26	37
67-8AN26	37
67-8AR26	37
67-84042	33
67-84043	33
67-84045	33
67-84047	33
67-84072	33
67-84073	33
67-84075	33
67-84076	33
67-84142	33
67-84143	33
67-84147	33
67-84162	33
67-84163	33
67-84165	33
67-84167	33
67-88042	33
67-88043	33
67-88045	33
67-88047	33
67-88072	33
67-88073	33
67-88075	33
67-88076	33
67-88142	33
67-88143	33

PARTS INDEX

PART NUMBER	PG
67-88147	33
67-88162	33
67-88163	33
67-88165	33
67-88167	33
67-9A010	37
67-9A010-B	37
67-9A010-T	37
67-9A011	37
67-9A011-972	37
67-9A014	38
67-9A019	37
67-9A020	38
67-9A020-B	38
67-9A020-T	38
67-9A021	38
67-9A021-972	38
67-9A024	38
67-9A029	38
67-9AB26	37
67-9AC26	37
67-9AJ26	37
67-9AN26	37
67-9AR26	37
67-9A583	37
67-9A726	35
67-9A824	38
67-9A925	38
67-94042	35
67-94043	35
67-94045	35
67-94047	35
67-94072	35
67-94073	35
67-94075	35
67-94076	35
67-94142	35
67-94143	35
67-94147	35
67-94162	35
67-94163	35
67-94165	35
67-94167	35
67-98042	35
67-98043	35
67-98045	35

PART NUMBER	PG
67-98047	35
67-98072	35
67-98073	35
67-98075	35
67-98076	35
67-98142	35
67-98143	35
67-98147	35
67-98162	35
67-98163	35
67-98165	35
67-98167	35
711C3N05	28
711C3N07	28
711C3N10	28
711C3N12	28
711C7N05	28
711C7N07	28
711C7N10	28
711C7N12	28
711C7N15	28
711P0BP6	28
711P0CP5	28
711P0DP4	28
712C3N05	30
712C3N07	30
712C3N10	30
712C3N12	30
712C7N05	30
712C7N07	30
712C7N10	30
712C7N12	30
712C7N15	30
712P0BP6	30
712P0BP6E2615	30
712P0CP5	30
712P0CP5E2615	30
712P0DP4	30
712P0DP4E2615	30
712P0EP4	30
712P0EP4E2615	30
712P0S14	30
712P0S16	30
712P0S18	30
712P0S20	30
712P0S22	30

PART NUMBER	PG
713C3N05	32
713C3N07	32
713C3N10	32
713C3N12	32
713C7N05	32
713C7N07	32
713C7N10	32
713C7N12	32
713C7N15	32
713P0CP5	32
713P0DP4	32
713P0EP4	32
713P0S14	32
713P0S16	32
713P0S18	32
713P0S20	32
713P0S22	32
714C3N10	34
714C3N12	34
714C3N15	34
714C3N20	34
714C7N05	34
714C7N07	34
714C7N10	34
714C7N12	34
714C7N15	34
714P0DP4	34
714P0EP4	34
714P0FP1	34
715C3N12	36
715C3N15	36
715C3N20	36
715C3N25	36
715P0EP4	36
715P0FP1	36
715P0GP2	36
716P0GP2	52
716P0GP3	52
751P9N05	62
751P9N07	62
751P9N10	62
752C3N05	178
752C3N07	178
752C3N10	178
752C3N12	178
752C7N05	178

PART NUMBER	PG
752C7N07	178
752C7N10	178
752C7N12	178
752C7N15	180
753C3N05	180
753C3N07	180
753C3N10	180
753C3N12	180
753C7N05	180
753C7N07	180
753C7N10	180
753C7N12	180
753C7N15	182
754C3N10	182
754C3N12	182
754C3N15	182
754C3N20	116
771C4N05185	116
771C4N07185	116
771C4N10185	116
771C4N12185	116
771F0N05	116
771F0N07	116
771F0N10	116
771F0N12	116
791C4N05	62
791C4N07	62
791C4N10	62
791C4N12	62
791M3FS	28
791P0BS3L	28
791P0BS4	28
791P0BS4L	28
791P0CS1L	28
791P0CS4L	28
791P0N05L	28
791P0N07L	28
791P0N10L	28
792M3FS	30
792P0BS3	30
792P0BS4	30
792P0CS2	30
792P0CS4	30
792P0DS1	30
792P0DS1L	30
792P0DS3	30

PART NUMBER	PG
793C3N05	72
793C3N07	72
793C3N10	72
793C3N12	72
793M3FS	32
793P0CS4	32
793P0DS1	32
793P0DS3	32
793P0ES2	32
794P0FS0	34
794M3	34
794M3L	34
794P0DS1	34
794P0DS3	34
794P0ES2	34
794P0FS1	34
794P0FS2	34
794P0FS3	48
794P0FS4	34
795C3N12	36
795C3N15	36
795C3N20	36
795C3N25	36
795M3	36
795P0FS1	36
795P0FS2	36
795P0FS3	36
795P0GS1	36
795P0N07	36
795P0N10	36
795P0N12	36
795P0N15	36
795P0N20	36
795P0N25	36
796C6N15	52
796C6N20	52
796C6N25	52
796M4	52
796P0GS1	52
796P0GS2	52
796P0JS1	52
796P0JS2	52
796P0JS3	52
796P0JS4	52
796P0KS1	52
796P0KS2	52

PART NUMBER	PG
796P0N15	52
796P0N20	52
796P0N25	52
796P0N30	52
7K2C3N05	178
7K2C3N07	178
7K2C3N10	178
7K2C3N12	178
7K3C3N05	180
7K3C3N07	180
7K3C3N10	180
7K3C3N12	180
7K3C7N05	180
7K3C7N07	180
7K3C7N10	180
7K3C7N12	180
7K4C3N10	182
7K4C3N12	182
7K4C3N15	182
7K4C3N20	182
7K4C7N10	182
7K4C7N12	182
7K4C7N15	182
7K4C7N20	184
7K5C3N12	186
7K5C3N15	186
7K5C3N20	186
7K5C3N25	186
7K5C7N12	186
7K5C7N15	186
7K5C7N20	186
7K5C7N25	186
7K5P0N07	186
7K5P0N10	186
7K5P0N12	186
7K5P0N15	186
7K5P0N20	186
7K5P0N25	186
7K6C6N15	188
7K6C6N20	188
7K6C6N25	188
7T1F0N05	28
7T1F0N07	28
7T1F0N10	28
7T1F0N12	28
7T4F0N10	34
7T4F0N12	34
7T4F0N15	34
7T4F0N20	34
7T5F0N12	36
7T5F0N15	36
7T5F0N20	36
7T5F0N25	36
7T6F0N15	52
7T6F0N20	52
7T6F0N20XL	52
7T6F0N25	52
7T6F0N25XL	52
7T6F0N30XL	52
7T7F0N20	134
7T7F0N25	134
7T7F0N30	134
7T7F0N35	134
7T7F0N40	134
7X1C3N07	62
7X1C3N10	62
7X1F0N10	68
7X1M3	62
7X1P0BS3	64
7X1P0BS4	64
7X1P0CS1	64
7X1P0CS4	64
7X1P0DS1	64
7X1P0DS2	64
7X1P0N05	62
7X1P0N07	62
7X1P0N10	68
7X2C3N07	62
7X2C3N10	62
7X2M3	68
7X2P0N10	68
7X3C3N10	70
7X3M3	70
7X3P0CS4	70
7X3P0DS1	70
7X3P0DS3	70
7X3P0ES2	70
7X3P0ES3	70
7X3P0N10	70
7X5A346	74
CG1001A	217
CG1001AM	217
CG1002A	217
CG1002AM	217
CG1003A	217
CG1003AM	217
CG1006P	217
CG1121A	217
CG1121AM	217
CG1122A	217
CG1122AM	217
CG1123A	217
CG1123AM	217
CG1124A	217
CG1124AM	217
CG1125A	217
CG1125AM	217
CG1125P	217
CG1141A	217
CG1141AM	217
CG1142A	217
CG1142AM	217
CG1143A	217
CG1143P	217
CG1144A	217
CG1144AM	217
CG1145P	217
CG2120AM	217
CG121A	217
CG121AM	217
CG122A	217
CG122AM	217
CG123A	217
CG123AM	217
CG124A	217
CG124AM	217
CG125A	217
CG125AM	217
CG127P	217
CG2001A	217
CG2001AM	217
CG2001P	217
CG2002A	217
CG2002AM	217
CG2002P	217
CG2003A	217
CG2003AM	217
CG2003P	217
CG2004A	217
CG2004AM	217
CG2005A	217
CG2005AM	217
CG2006A	217
CG2006AM	217
CG2120A	217
CG2121A	217
CG2121AM	217
CG2122A	217
CG2122AM	217
CG2123A	217
CG2123AM	217
CG3001A	217
CG3001AM	217
CG3002A	217
CG3002AM	217
CG340A	217
CG340AM	217
CG341A	217
CG341AM	217
CG342A	217
CG342AM	217
CG344A	217
CG344AM	217
CG345A	217
CG345AM	217
CG347P	217
DS1PC	44
DS2MC	52
DS3PC	46
DS6MC	34
DS6PC	34
DS9MC	36
LP-843	28
MB40-20	126
MB40-25	126
MB40-30	126
MB40-35	126
MB40-40	126
MB40PFQ-20	126
MB40PFQ-25	126
MB40PFQ-30	126
MB40PFQ-35	126
MB40PFQ-40	127
PFLUG1	127
PFLUG1-90	128
PFLUG10	127
PFLUG10-90	128
PFLUG20	127
PFLUG20-90	128
PFLUG250	127
PFLUG250-90	128
PFLUG30	127
PFLUG30-90	128
PFLUG300	127
PFLUG300-90	128
PFLUG350	127
PFLUG350-90	128
PFLUG40	127
PFLUG40-90	128
PFLUG400	127
PFLUG400-90	128
PFLUG500	127
PFLUG500-90	128
PFLUG600	127
PFLUG600-90	128
PFLUG650	127
PFLUG700-90	128
PT400R350-3	134
PT500R350-3	134
PT535FX350-3	160
SD18	28

Complimentary Products

For complimentary Hazardous Location products visit technor.com.

Lighting



Control Stations



Junction Boxes



Flameproof Enclosures



Earthing Systems



Visual Signals



Cable Glands & Fittings



TECHNOR ITALSMEA

A COMPANY OF MARECHAL ELECTRIC

GLOBAL PRESENCE

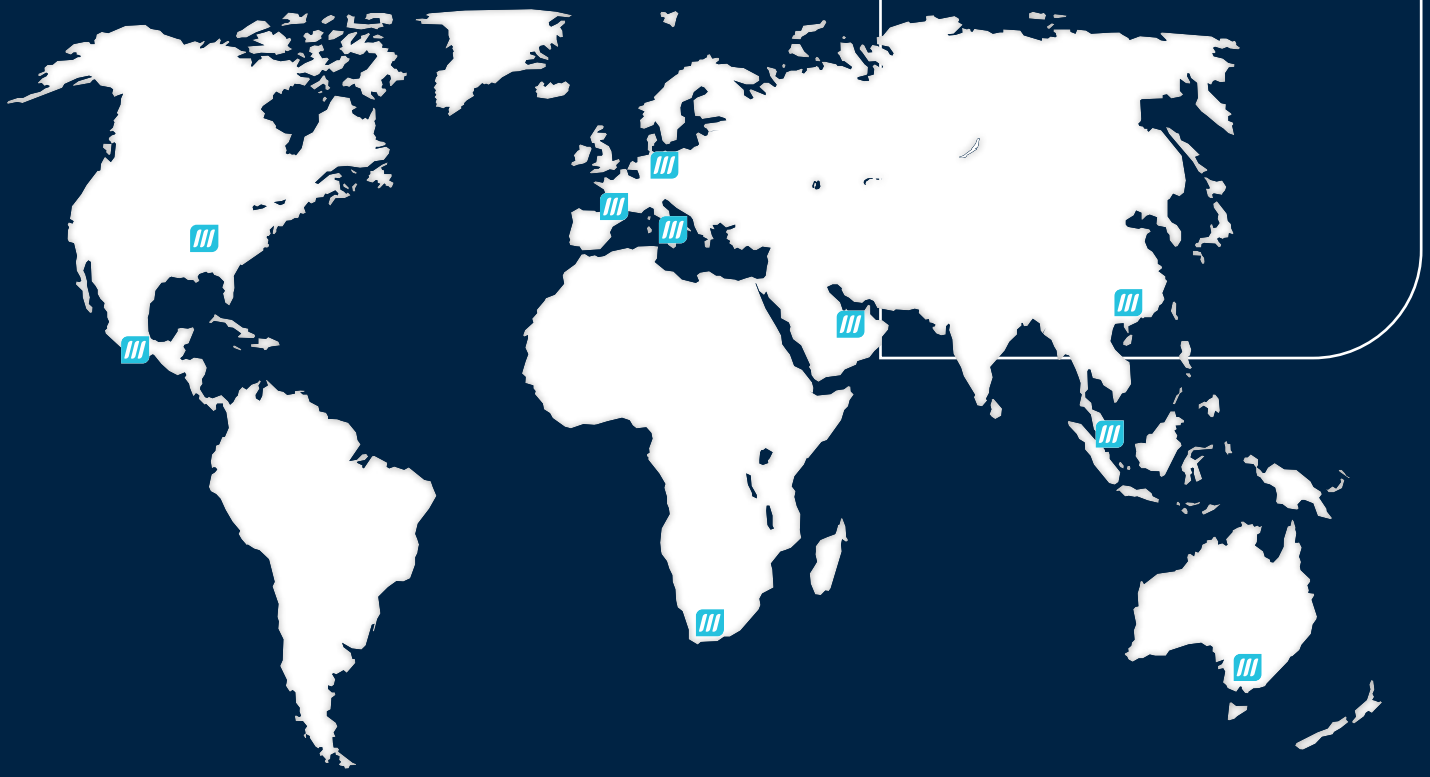

USA/Canada
MELTRIC Corporation
4765 W. Oakwood Park Drive
Franklin WI 53132, USA
Tel.: 414-433-2700
Fax: 414-433-2701
e-mail: mail@meltric.com

México
MELTRIC de México
Insurgentes Sur 863 – Piso 7
Nápoles, Benito Juárez
D.F. México, CP 03810
Tel.: 52-55-5005-6752
e-mail: scmexico@meltric.com

Africa SADC area
MARECHAL ELECTRIC AFRICA (PTY) LTD.
PO Box 13875 Witfield 1467
Unit A1 Harvard Lane
Aero Star Business Park
Jet Park Road, Jet Park
South Africa
Tel.: +27 11 894 7226/7/8
e-mail: sales.za@marechal.com

Asia
MARECHAL ELECTRIC ASIA Pte LTD
9 Tagore Lane
#01-05 9@Tagore
Singapore 787472
Tel. : +65 6554 2722
e-mail: sales.asia@marechal.com

Australia
MARECHAL AUSTRALIA PTY LTD
20 A Technology Circuit
HALLAM VIC 3803
Australia
Tel: +61 (0)3 8786 2500
e-mail: sales@marechal.com.au

China
MARECHAL ELECTRIC (CHINA) CO., LTD
11 North Xiangshui Road,
West Dayawan District,
Huizhou PRC
Tel: +86 (0)752-5319536
e-mail: sales.cn@marechal.com

Germany/Austria/Switzerland/ Eastern Europe/Russia
MARECHAL GmbH
Im Lossenfeld 8
D-77731 Willstätt-Sand
Germany
Tel.: +49 (0)7852/91 96-0
e-mail: info.de@marechal.com

Middle East
MARECHAL ELECTRIC Middle East Trading LLC
80 Street, Shed-01B ALFA3 Complex
Jebel Ali Industrial 1
Dubai, UAE
Tel.: +971 4 226 8400
e-mail: sales.me@marechal.com

MARECHAL ELECTRIC (Head Office)
5, avenue du chemin de Presles
94410 Saint-Maurice, FRANCE
Phone : +33 (0)1 45 11 60 00
e-mail: contact@marechal.com

TECHNOR
TECHNOR ITALSMEA S.p.A.
Via Italia 33,
20060 Gessate (Milano), Italia
Tel.: +39 02 95 00 151
e-mail: sales@italsmea.com

For any other country or area, please contact head office.

CATALOG_03/2026

meltric.com

MELTRIC
A COMPANY OF MARECHAL ELECTRIC