31___DTIP-20CP

X - FACEPLATE

SPECIFICATION SUBMITTAL

BRASS DIRECT WITH TIP-TOE EXTENDED WASTE & OVERFLOW

JOB:		DATE:	
CONTRACTOR:		QTY:	
ARCHITECT/ENGINEER:		PO#:	
		TAG:	

SPECIFICATION

Features a SlideOn™ faceplate, spin-on tie plate and corrugated overflow arm. Tip-Toe stopper.
For 20" bathtubs. Uses 1-1/2" brass pipe.

CERTIFICATION

C US
Meets UPC & IPC Code

ASME A112.18.2/CSA-B125.2
The "cCSAus" Meets UPC & IPC Code" mark means the product conforms to the requirements of the NPC, UPC, IPC, and IRC.

FACEPLATES AVAILABLE

Fill **X - FACEPLATE**

4 ☐ **41** ☐ **42** ☐

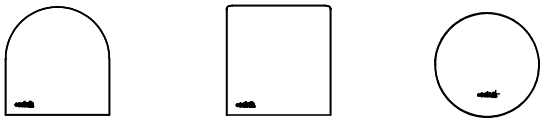

BELL SQUARE ROUND

FINISHES AVAILABLE

CP

CHROME PLATED

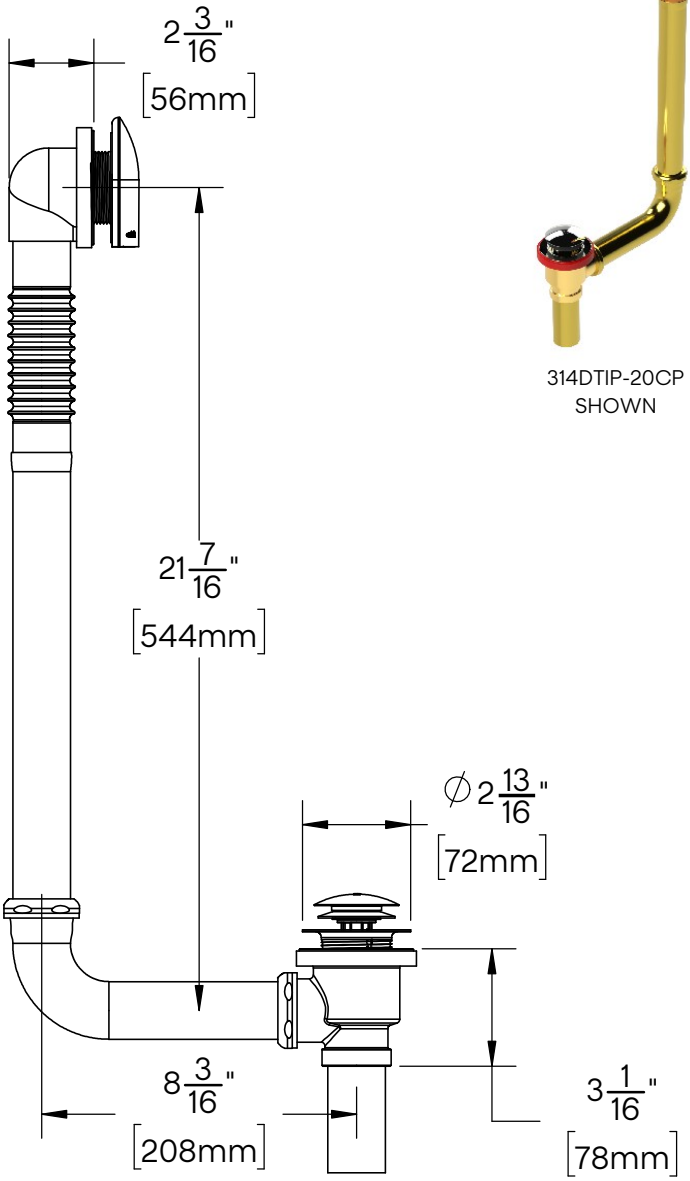

314DTIP-20CP SHOWN

Oakville Stamping and Bending Ltd.
T. 905.827.0320 or toll free 1.877.314.6040 F. 905.827.6375 or toll free 1.877.827.6040
All rights reserved. +osb™ reserves the right to change product specifications and material or discontinue models without notice.
www.osb.ca (Canada) www.osbplumbing.com (USA)
05/27/26