Represented by

ILLING™ PACKAGING

Product Specification Sheet

Illing Part# 1407

4 OZ UNITOP CAN - 1 3/4" NECK TINPLATE

Part #: 1407

Size:	4 OZ
Color:	
Material:	TIN PLATE
Style:	UNITOP CAN
Additional Info:	1 3/4" NECK
Case Pack:	396 / EACH
Pallet Pack:	9504 / EACH

Represented by

ILLING™ PACKAGING

Product Specification Sheet

Illing Part# 1407

1 2 CAN SIZE	A	B	C	D	MAJOR DIA.	MINOR DIA.
202 x 108	2.140	1.465	1.890	1 3/4 INT'L	1.752	1.690 MAX
202 x 214	2.140	2.865	3.315	1 3/4 INT'L	1.752	1.690 MAX
208 x 113	2.500	1.805	2.250	1 3/4 INT'L	1.752	1.690 MAX
211 x 304	2.655	3.235	3.660	1 3/4 INT'L	1.752	1.690 MAX
307 x 113	3.370	1.805	2.250	1 3/4 INT'L	1.752	1.690 MAX
307 x 206	3.390	2.335	2.780	1 3/4 INT'L	1.752	1.690 MAX
307 x 400	3.370	3.990	4.430	1 3/4 INT'L	1.752	1.690 MAX
404 x 414	4.230	4.875	5.340	1 3/4 INT'L	1.752	1.690 MAX
404 x 414 BEADED	4.230	4.875	5.340	1 3/4 INT'L	1.752	1.690 MAX

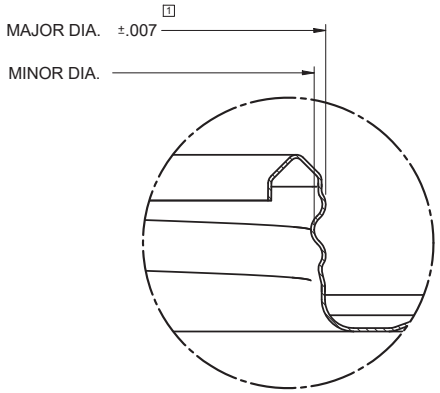

THREAD DETAIL

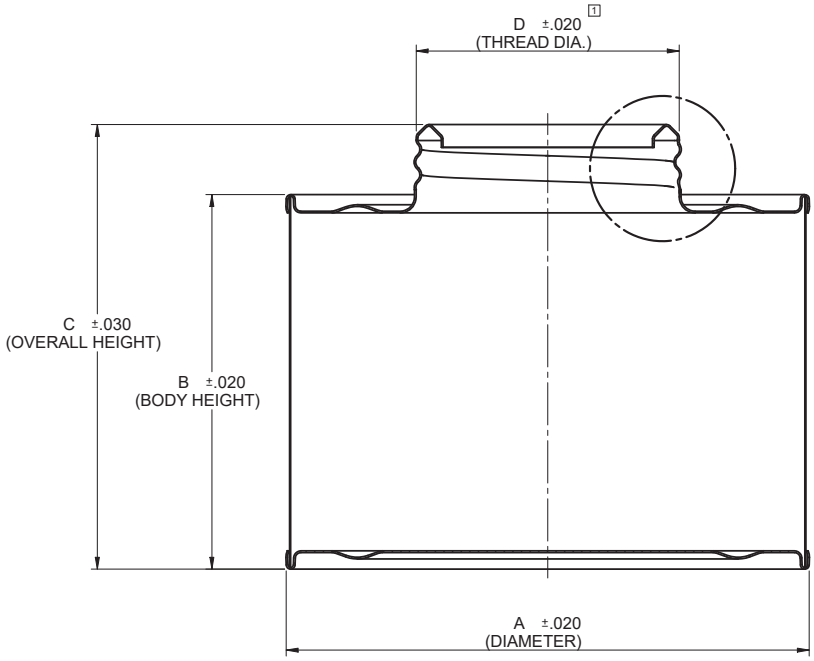

NO.	REVISION	DATE	BY
4			
3			
2	REMOVED 202 x 111	2/26/09	GG
1	UPDATED CAN SPECS & ADDED SIZES, WAS ±.010, ADDED ±.020	9/19/07	GG

ORCA, INC.

TOOL: UNITOP SCREW NECK CANS

SIZE:

DRAWN BY: BJS

CHECKED BY:

DATE: 2/26/2009

PROPORTIONAL: YES

OR175NY29