Represented by

ILLING PACKAGING

**Product Specification Sheet**

Illing Part# 3511MR

# 32 OZ WHITE PP STRIGHT SIDE JAR 120-400 NECK

**Part #: 3511MR**

| | |
|---|---|
| Size: | 32 OZ |
| Color: | WHITE |
| Material: | PP |
| Style: | JAR |
| Additional Info: | 120-400 NECK |
| Case Pack: | 44 / EACH |
| Pallet Pack: | 1,540 / EACH |

Represented by

ILLING™ PACKAGING

# Product Specification Sheet

## Illing Part# 3511MR

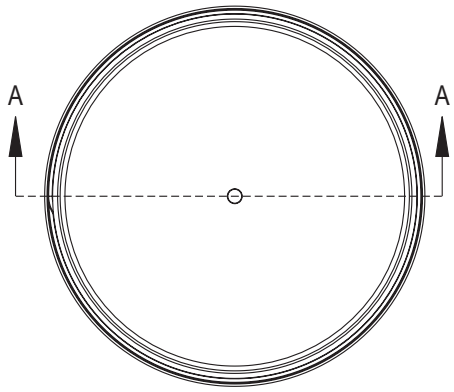


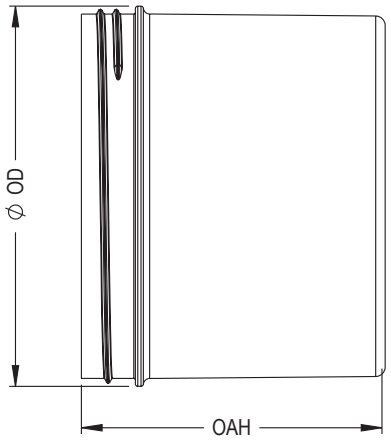


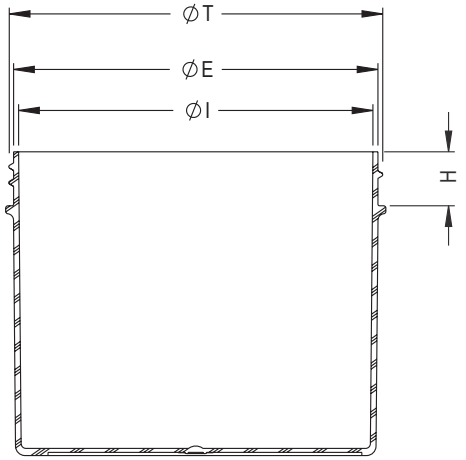




SECTION A-A

STATIC TORQUE RECOMMENDATION: 55-95 in-lbs
REQUIREMENT MAY VARY DEPENDING UPON CONTAINER MATERIAL, NECK FINISH, AND CAPPING EQUIPMENT

DIMENSIONS ENCLOSED IN ( ) INDICATE REFERENCE DIMENSIONS AND NO TOLERANCE LIMITS ARE ESTABLISHED

DIMENSIONS PRECEDED BY AN "*" INDICATE THE DIMENSION IS PROCESS SENSITIVE. PROCESS SENSITIVE DIMENSIONS ARE VERIFIED TO BE WITHIN THE TOLERANCE LIMITS DURING THE PRODUCTION RUN. ALL REMAINING DIMENSIONS ARE VERIFIED AT PRODUCTION VALIDATION.

PROPRIETARY AND CONFIDENTIAL
THIS DRAWING IS PROTECTED BY COPYRIGHT AND CONTAINS INFORMATION PROPRIETARY TO MOLD-RITE PLASTICS AND ITS SUBSIDIARIES. ANY REPRODUCTION, DISCLOSURE, OR USE OF ITS CONTENTS OR ANY PART THEREOF IS EXPRESSLY PROHIBITED EXCEPT AS MOLD-RITE PLASTICS AND ITS SUBSIDIARIES OTHERWISE MAY AGREE IN WRITING.

THIS MASTER DOCUMENT IS CONTROLLED ELECTRONICALLY. PRINTED OR DOWNLOADED COPIES ARE UNCONTROLLED. DOCUMENT USERS ARE RESPONSIBLE FOR ENSURING THEY HAVE THE LATEST REVISION PRIOR TO USE.

| REFERENCE | DIMENSION | TOLERANCE | UNITS |
|---|---|---|---|
| ∅T | 4.696 [119.28] | ±0.017 [0.43] | in [mm] |
| ∅E | 4.577 [116.26] | ±0.017 [0.43] | in [mm] |
| ∅I | 4.451 [113.06] | ±0.017 [0.43] | in [mm] |
| H | 0.678 [17.22] | ±0.015 [0.38] | in [mm] |
| OAH | 3.816 [96.93] | ±0.015 [0.38] | in [mm] |
| ∅OD | 4.777 [121.34] | ±0.017 [0.43] | in [mm] |
| PART WEIGHT | 68.50 | ±4.00 | g |
| VOLUME | 31.65 [936] | REFERENCE | fl oz [cc] |

THREAD DETAIL INFORMATION: 5 THREADS PER INCH | 0.200" [5.08] PITCH | 495° | FULL DEPTH THREADS

THE PART DIMENSIONS DEPICTED ARE THOSE WHICH HAVE GENERALLY BEEN FOUND TO BE FUNCTIONAL BASED ON INDUSTRY EXPERIENCE. BECAUSE OF VARIABILITY IN CONTAINER FINISHES, EACH CLOSURE/FINISH SYSTEM SHOULD BE INDIVIDUALLY EVALUATED AND TESTED TO ENSURE IT MEETS APPLICABLE PERFORMANCE CRITERIA.

MOLD-RITE PLASTICS AND ITS SUBSIDIARIES RESERVE THE RIGHT TO REVISE ANY OR ALL SPECIFICATIONS AND REQUIREMENTS.

| | | |
|---|---|---|
| DRAWN BY: | DAS | 5/14/2018 |
| ENG APPR: | LES | 2/23/2023 |
| QA APPR: | TEM | 02/28/2023 |

MRP solutions
Packaging with purpose.

DRAWING TITLE:
32oz 120mm Jar
REGULAR WALL PP

MATERIAL: POLYPROPYLENE
DRAWING TYPE: CUSTOMER | DISTRIBUTION CODE: D
REPLACES DRAWINGS: J-1019
MODEL NUMBER: PM 11140 32oz 120mm Jar

| DWG SIZE: | SCALE: | SHEET: | DRAWING NUMBER: | REVISION: |
|---|---|---|---|---|
| 8.5" x 11" | 1:2 & NOTED | 1 OF 3 | CQA-10711 | 00.AC |

Represented by

ILLING™ PACKAGING

# Product Specification Sheet

**Illing Part#** **3511MR**

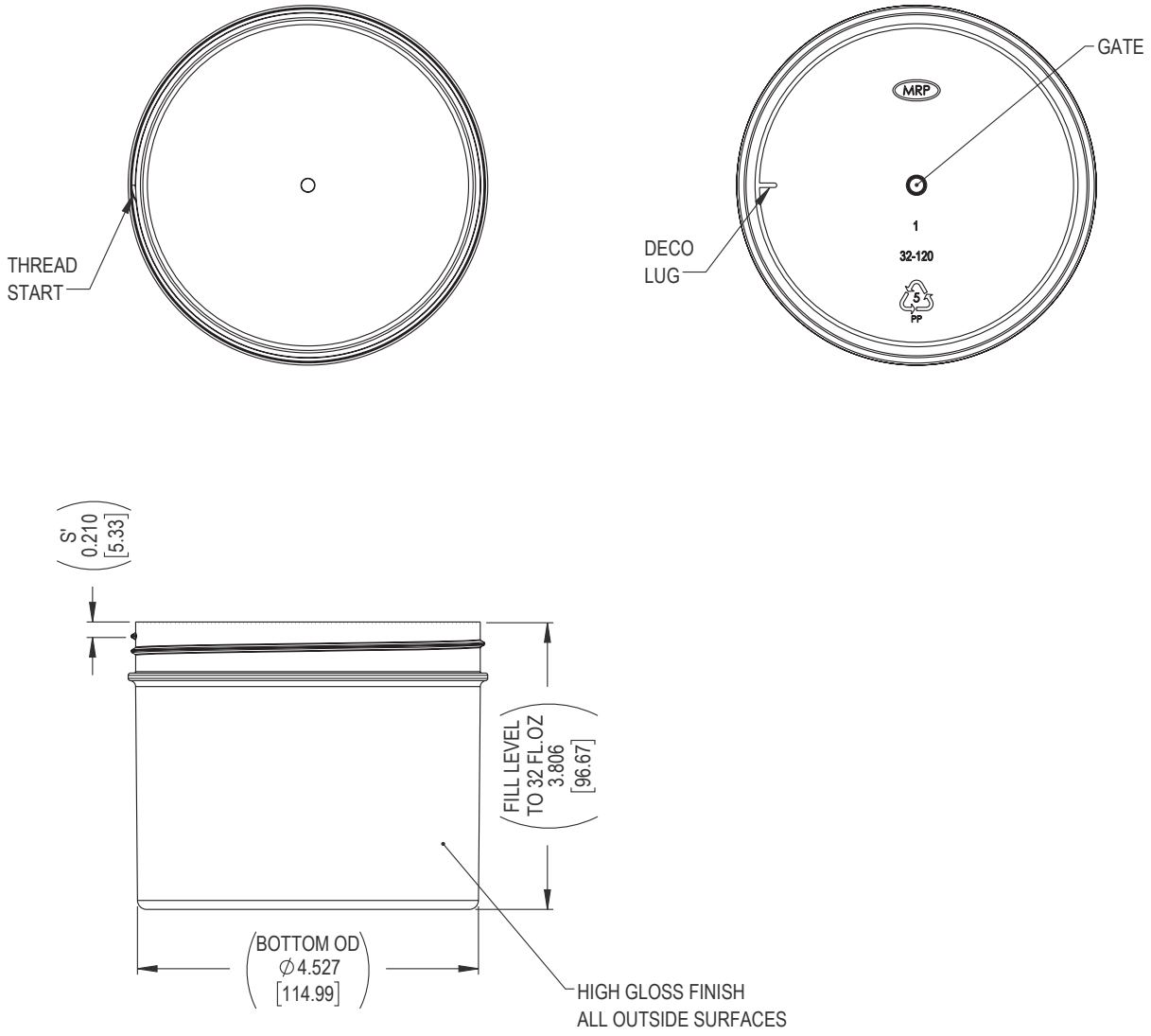


DIMENSIONS ENCLOSED IN ( ) INDICATE REFERENCE DIMENSIONS AND NO TOLERANCE LIMITS ARE ESTABLISHED

PROPRIETARY AND CONFIDENTIAL

THIS DRAWING IS PROTECED BY COPYRIGHT AND CONTAINS INFORMATION PROPRIETARY TO MOLD-RITE PLASTICS AND ITS SUBSIDIARIES. ANY REPRODUCTION, DISCLOSURE, OR USE OF ITS CONTENTS OR ANY PART THEREOF IS EXPRESSLY PROHIBITED EXCEPT AS MOLD-RITE PLASTICS AND ITS SUBSIDIARIES OTHERWISE MAY AGREE IN WRITING

THE PART DIMENSIONS DEPICTED ARE THOSE WHICH HAVE GENERALLY BEEN FOUND TO BE FUNCTIONAL BASED ON INDUSTRY EXPERIENCE BECAUSE OF VARIABILITY IN CONTAINER FINISHES, EACH CLOSURE/FINISH SYSTEM SHOULD BE INDIVIDUALLY EVALUATED AND TESTED TO ENSURE IT MEETS APPLICABLE PERFORMANCE CRITERIA.

MOLD-RITE PLASTICS AND ITS SUBSIDIARIES RESERVE THE RIGHT TO REVISE ANY OR ALL SPECIFICATIONS AND REQUIREMENTS.

## REVISION HISTORY

REVISIONS: REV: A PHYSICAL CHANGE TO THE PART IMPACTING FIT, FORM OR FUNCTION
N/P: DRAWING OR SPECIFICATION CHANGE ONLY

| DATE | REV | N/P | DESCRIPTION | ENG | DRW |
|---|---|---|---|---|---|
| 02/15/2023 | 00 | AC | UPDATE DRAWING FORMAT. MOVE S' TO REFERENCE DIMENSION. CORRECT VOLUME FROM 30.67 TO 31.65 AND CHANGE TOLERANCE TO REFERENCE. ADD PAGE 3 FOR LABEL SPECIFICATIONS. ADD FILL LEVEL & SURFACE FINISH REFERENCE NOTES. NO STEEL CHANGES HAVE OCCURRED. | LES | LES |
| 05/17/2022 | 00 | AB | CORRECT BOTTOM NECK/SIZE MARKING FROM "24-120" TO "32-120". NO STEEL CHANGES HAVE OCCURRED. | LES | LES |
| 11/06/2018 | 00 | AA | DRAWING UPDATED TO REFLECT HISTORICAL RUN DATA & PROCESS CAPABILITY. NO CHANGES TO THE STEEL OR PART HAVE OCCURRED. | JDM | JDM |

MRP solutions
Packaging with purpose.

DRAWING TITLE:

32oz 120mm Jar
REGULAR WALL PP

THIS MASTER DOCUMENT IS CONTROLLED ELECTRONICALLY. PRINTED OR DOWNLOADED COPIES ARE UNCONTROLLED. DOCUMENT USERS ARE RESPONSIBLE FOR ENSURING THEY HAVE THE LATEST REVISION PRIOR TO USE.

DRAWING TYPE: CUSTOMER | DISTRIBUTION CODE: D

| DWG SIZE: 8.5" x 11" | | DRAWING NUMBER: | REVISION: |
|---|---|---|---|
| SCALE: 1:2 & NOTED | SHEET: 2 OF 3 | CQA-10711 | 00.AC |

Represented by

ILLING™ PACKAGING

# Product Specification Sheet

**Illing Part#** **3511MR**

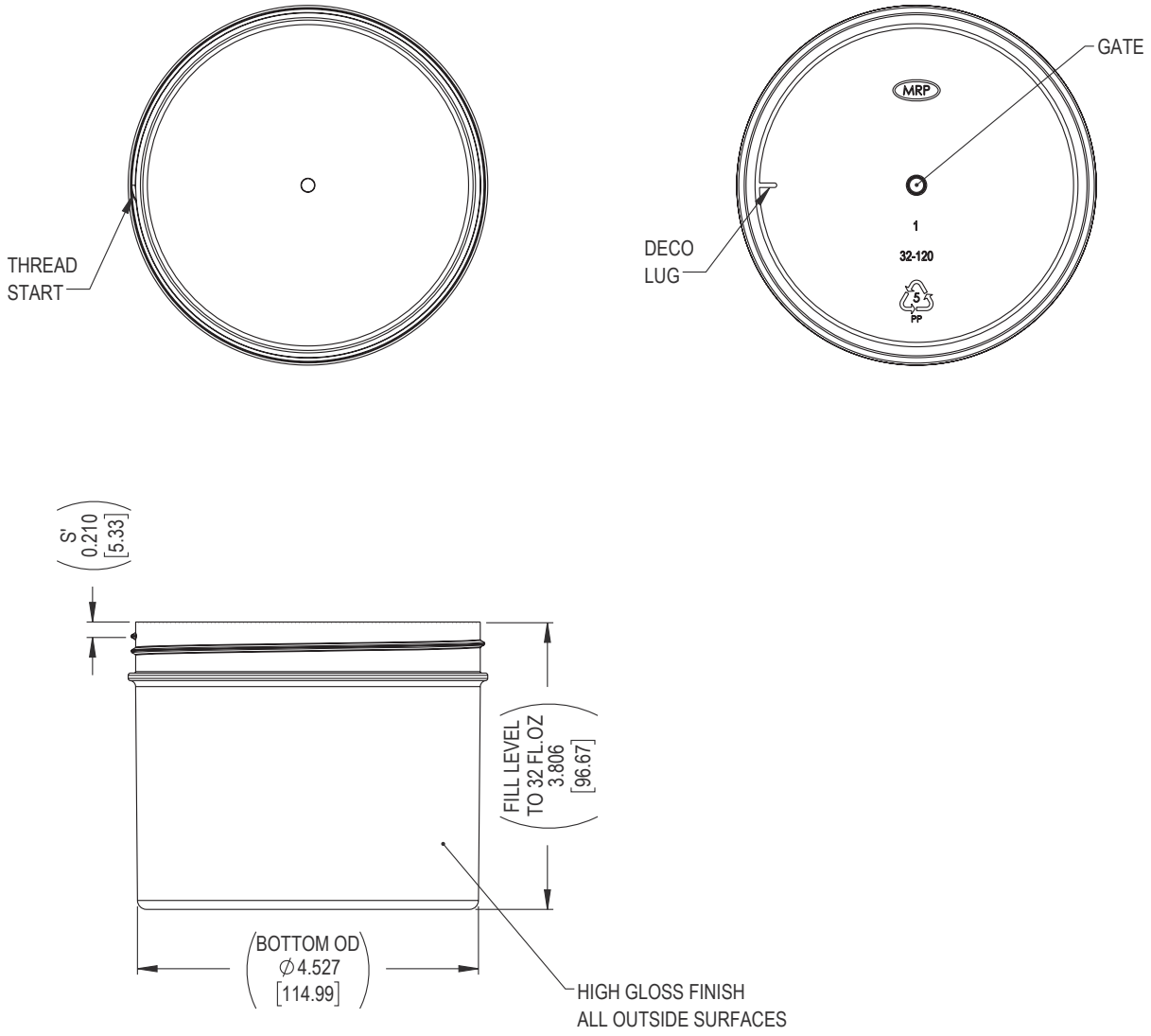


DIMENSIONS ENCLOSED IN ( ) INDICATE REFERENCE DIMENSIONS AND NO TOLERANCE LIMITS ARE ESTABLISHED

PROPRIETARY AND CONFIDENTIAL

THIS DRAWING IS PROTECED BY COPYRIGHT AND CONTAINS INFORMATION PROPRIETARY TO MOLD-RITE PLASTICS AND ITS SUBSIDIARIES. ANY REPRODUCTION, DISCLOSURE, OR USE OF ITS CONTENTS OR ANY PART THEREOF IS EXPRESSLY PROHIBITED EXCEPT AS MOLD-RITE PLASTICS AND ITS SUBSIDIARIES OTHERWISE MAY AGREE IN WRITING

THE PART DIMENSIONS DEPICTED ARE THOSE WHICH HAVE GENERALLY BEEN FOUND TO BE FUNCTIONAL BASED ON INDUSTRY EXPERIENCE BECAUSE OF VARIABILITY IN CONTAINER FINISHES, EACH CLOSURE/FINISH SYSTEM SHOULD BE INDIVIDUALLY EVALUATED AND TESTED TO ENSURE IT MEETS APPLICABLE PERFORMANCE CRITERIA.

MOLD-RITE PLASTICS AND ITS SUBSIDIARIES RESERVE THE RIGHT TO REVISE ANY OR ALL SPECIFICATIONS AND REQUIREMENTS.

## REVISION HISTORY

REVISIONS: REV: A PHYSICAL CHANGE TO THE PART IMPACTING FIT, FORM OR FUNCTION
N/P: DRAWING OR SPECIFICATION CHANGE ONLY

| DATE | REV | N/P | DESCRIPTION | ENG | DRW |
|---|---|---|---|---|---|
| 02/15/2023 | 00 | AC | UPDATE DRAWING FORMAT. MOVE S' TO REFERENCE DIMENSION. CORRECT VOLUME FROM 30.67 TO 31.65 AND CHANGE TOLERANCE TO REFERENCE. ADD PAGE 3 FOR LABEL SPECIFICATIONS. ADD FILL LEVEL & SURFACE FINISH REFERENCE NOTES. NO STEEL CHANGES HAVE OCCURRED. | LES | LES |
| 05/17/2022 | 00 | AB | CORRECT BOTTOM NECK/SIZE MARKING FROM "24-120" TO "32-120". NO STEEL CHANGES HAVE OCCURRED. | LES | LES |
| 11/06/2018 | 00 | AA | DRAWING UPDATED TO REFLECT HISTORICAL RUN DATA & PROCESS CAPABILITY. NO CHANGES TO THE STEEL OR PART HAVE OCCURRED. | JDM | JDM |

MRP solutions
Packaging with purpose.

DRAWING TITLE:

32oz 120mm Jar
REGULAR WALL PP

THIS MASTER DOCUMENT IS CONTROLLED ELECTRONICALLY. PRINTED OR DOWNLOADED COPIES ARE UNCONTROLLED. DOCUMENT USERS ARE RESPONSIBLE FOR ENSURING THEY HAVE THE LATEST REVISION PRIOR TO USE.

DRAWING TYPE: CUSTOMER | DISTRIBUTION CODE: D

| DWG SIZE: 8.5" x 11" | | DRAWING NUMBER: | REVISION: |
|---|---|---|---|
| SCALE: 1:2 & NOTED | SHEET: 2 OF 3 | CQA-10711 | 00.AC |