Represented by

ILLING™ PACKAGING

Product Specification Sheet

Illing Part# 3586MR

4 OZ NATURAL HDPE MODERN ROUND BOTTLE 24-410 560/CTN 10080/LTL 13440/PLT

Part #: 3586MR

Size:	4 OZ BOTTLE
Color:	NATURAL
Material:	HIGH DENSITY POLYETHYLENE
Style:	MODERN ROUND BOTTLE
Additional Info:	24-410 NECK
Case Pack:	560 / EACH
Pallet Pack:	10,080 / EACH

Represented by

ILLING™ PACKAGING

Product Specification Sheet
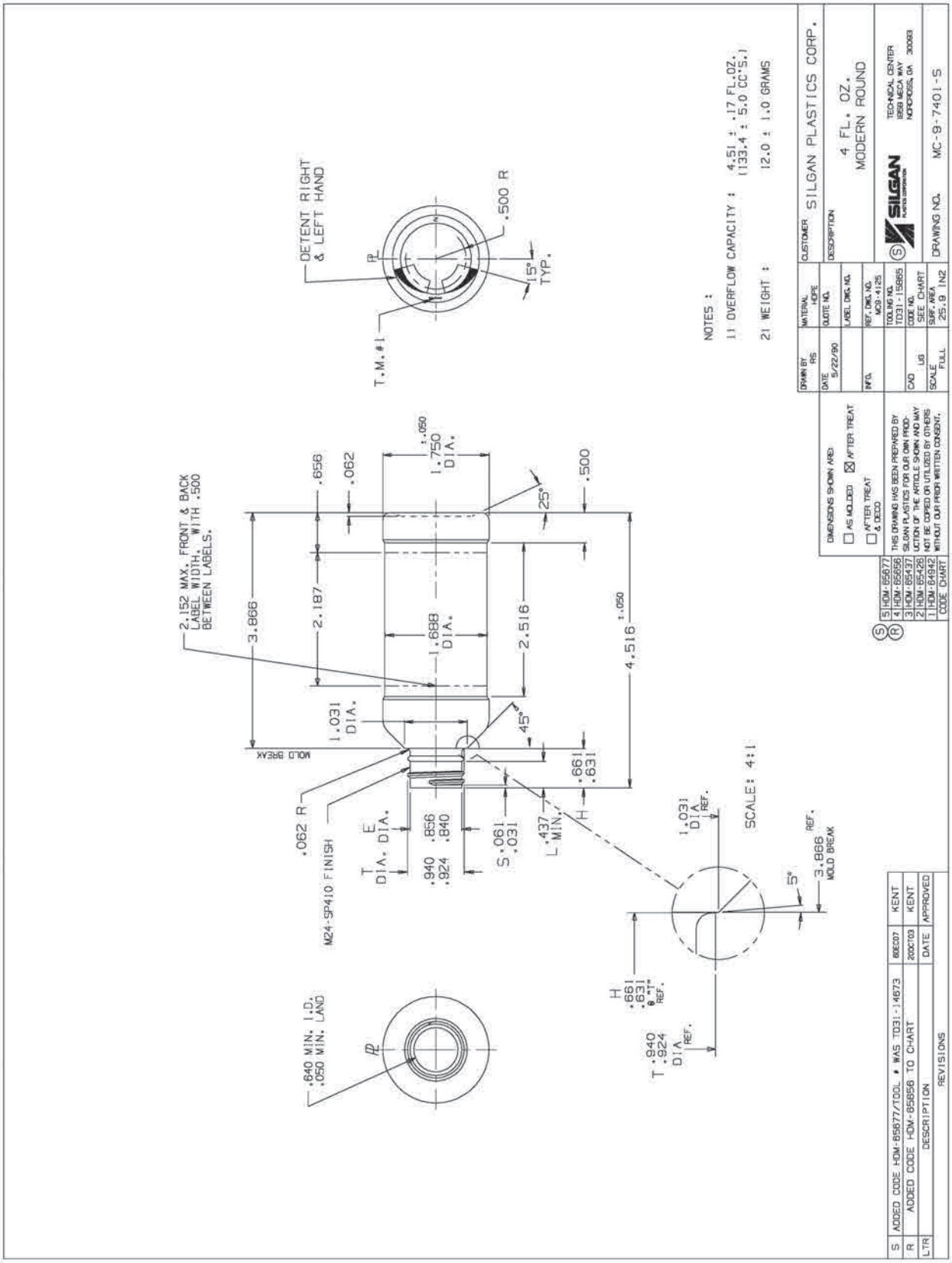
Illing Part# 3586MR