Represented by

ILLING™ PACKAGING

Product Specification Sheet

Illing Part# 36951PS

24-410 WH PP FLIP-TOP CAP .25 ORIF WITH PS-113 UNI-FOAM LINER

Part #: 36951PS

Size:	24-410
Color:	WHITE
Material:	POLYPROPYLENE
Style:	FLIP TOP CAP WITH .025 ORIFICE
Additional Info:	PRESSURE SENSITIVE 113 LINER
Case Pack:	3,400/EACH
Pallet Pack:	85,000/EACH

Represented by

ILLING™ PACKAGING

Product Specification Sheet

Illing Part# 36951PS

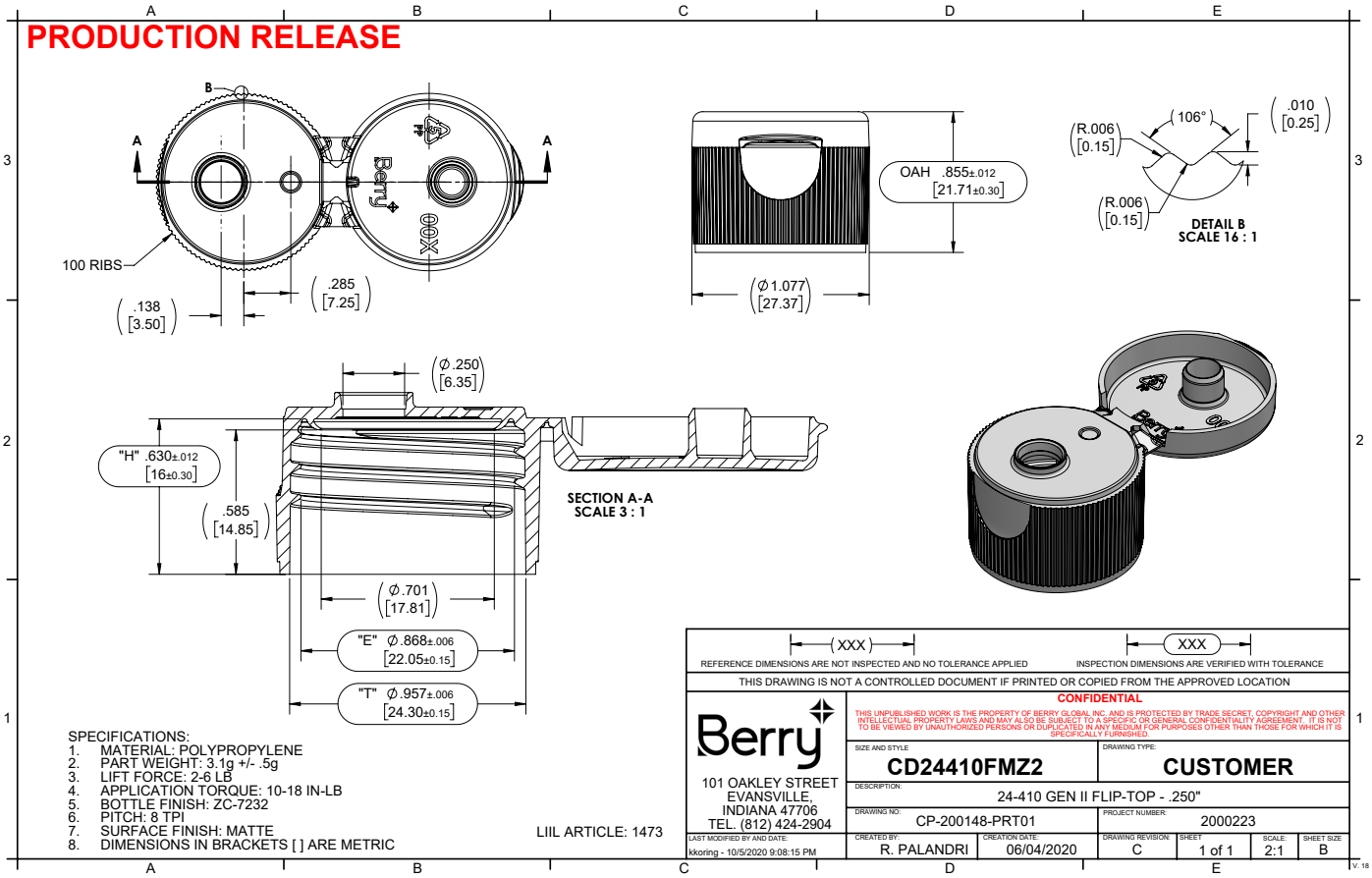

SPECIFICATIONS:
1. MATERIAL: POLYPROPYLENE
2. PART WEIGHT: 3.1g +/- .5g
3. LIFT FORCE: 2-6 LB
4. APPLICATION TORQUE: 10-18 IN-LB
5. BOTTLE FINISH: ZC-7232
6. PITCH: 8 TPI
7. SURFACE FINISH: MATTE
8. DIMENSIONS IN BRACKETS [ ] ARE METRIC

LIIL ARTICLE: 1473

Represented by

ILLING™ PACKAGING

Product Specification Sheet

Illing Part# 36951PS

Selig liners

Freshness and Protection for Today's Packaging

Uni-Foam™ Technical Data Sheet

PS-113 (Pressure Sensitive)

Revision: PS-113-12022013

Product	PS-113 (Pressure Sensitive)
Scope	One piece uniform polystyrene foam coated on one side with a specially formulated torque-activated adhesive. (Not approved for use with wet products.)
Composition	

Material	Standard	Metric
Polystyrene Foam	0.020"	0.508 mm
Adhesive Layer	0.002"	0.051 mm

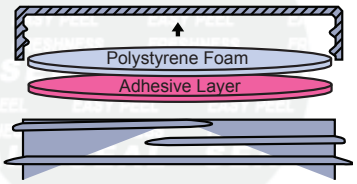

FDA Status: 21 CFR 177.1210	**Recommended Storage and Handling:** Refer to website
Drug Master File (DMF): 3948	**EU / EP Reg.:**
GTR Oxygen: 2290 cc/m^2.Day (ASTM D3985)	**MVTR:** 5.85 g/m^2.Day (ASTM F1249)
Print Location (if any):	

Selig materials are compliant with limitation of heavy metals in packaging per CONEG & EU 94/62/EC, article 11.

MSDS's are not required as Selig is not a chemical manufacturer or distributor and our products are 'articles' intended for food packaging per 29 CFR 1910.1200 (HazCom).

The information contained within this product data bulletin is to be used as a general guide in determining which structures are offered for sealing to specific container materials. All of the information which we provide is reliable to the best of our knowledge, but the accuracy thereof is not guaranteed. We suggest that consumers determine suitability for their own application.

www.seligsealing.com

Corporate Headquarters
Selig Sealing Products, Inc.
342 E Wabash St
Forrest, IL 61741, USA
Phone: +1 (815) 785-2100
Fax: +1 (815) 657-7584

North American Sales
Selig Sealing Products, Inc.
184 Shuman Blvd., Suite 310
Naperville, IL 60563, USA
Phone: +1 (630) 922-3158
Fax: +1 (630) 922-8469

European Sales and Manufacturing
Selig UK, LTD 635-637 Ajax Avenue
Slough Trading Estate
Slough Berkshire SL14BH UK
Phone: +44 (0) 1753 773 000
Fax: +44 (0) 1753 773 111

Canadian Manufacturing
Selig Canada, ULC
145 Edward Street
Aurora, Ontario Canada, L4G 1W3
Phone: +1 (905) 727-0114
Fax: +1 (905) 727-8544

Swiss Manufacturing
Selig Switzerland LTD
Bahnhofstrasse 11
CH-8172 Niederglatt
Phone: +41 (0) 44 851 50 50
Fax: +41 (0) 44 851 50 51