© 2016 AFCI

Amphenol FCi

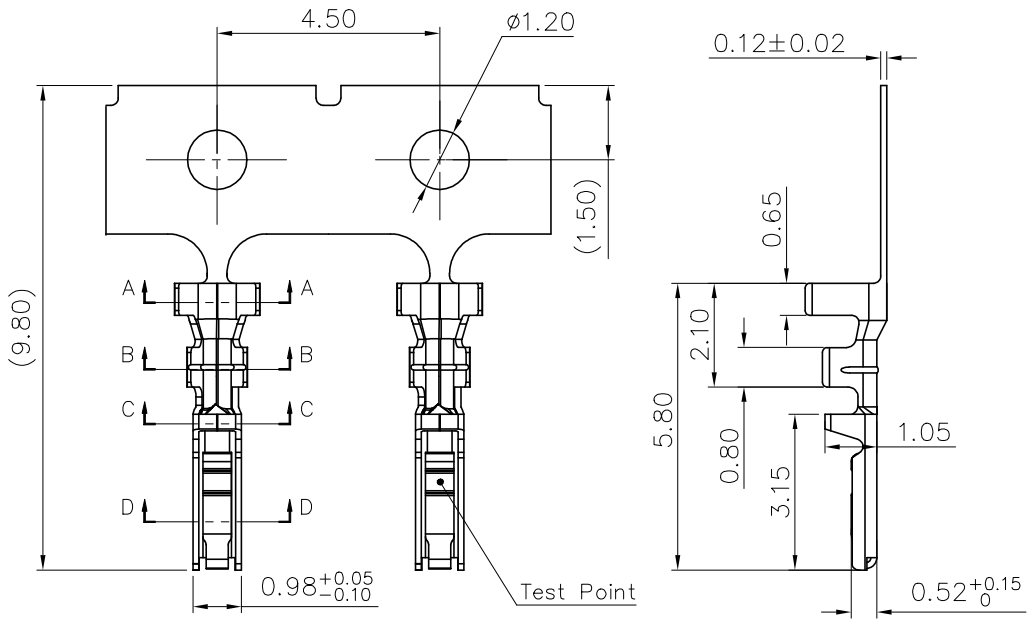

NOTES:
1. MATERIAL: PHOSPHOR BRONZE, t=0.12mm
2. APPLICABLE WIRE RANGE: AWG#26~#32
3. INSULATION O.D.: ø1.00mm MAX
4. USE WITH: 10169365 HOUSING
5. ORDERING CODE: 10169366−X 0 LF

Plating :
0: Bright Tin 80u" Min
1: Gold Flash 1u" Min

Applicable Wire Size:
0: 28AWG
1: 26AWG
2: 30AWG
3: 32AWG

LEAD FREE

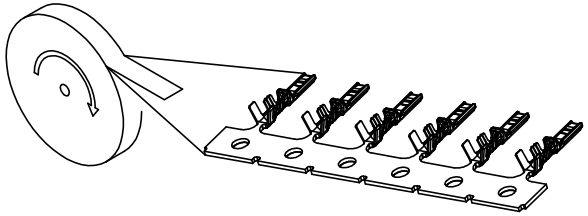

UNREELING DIRECTION
SCALE 1:2

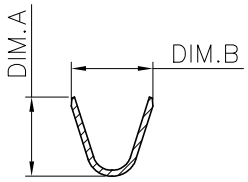

SEC: A−A

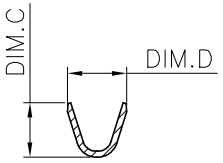

SEC: B−B

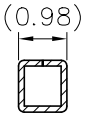

SEC: C−C

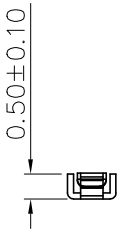

SEC: D−D

PART No.	DIM A	DIM B	DIM C	DIM D
10169366−X1LF	1.55	1.65	1.05	1.20
10169366−X0LF	1.50	1.60	1.00	1.15
10169366−X2LF	1.45	1.55	0.95	1.10
10169366−X3LF	1.40	1.50	0.90	1.05

ltr	ecn no	dr	date
A	New Release	JH	2023/09/22
B	ELX−N−51630	JH	2024/05/27
C	ELX−N−52029	JH	2024/07/02

mat'l. code

surface ISO 1302

tolerance ISO 406/ISO 1101

tolerances unless otherwise specified

angles 0°±2°

linear .0±.5 / .00±.25 / .000±.010

projection

mm

scale 1:1

dr	Jeffrey.Huang	–
engr	Jeffrey.Huang	–
chr	TIM YAO	–
appd	TIM YAO	–

product family: FitMate

title: 1.25mm DR TERMINAL

dwg no: 10169366

sheet1 of 1

size: A4

type: Product Customer Drawing

sheet index: revision C; sheet 1

Amphenol FCi

form: A4mmXLc−2016−02−24

PDS Rev :C STATUS:Released Printed: May 12, 2025