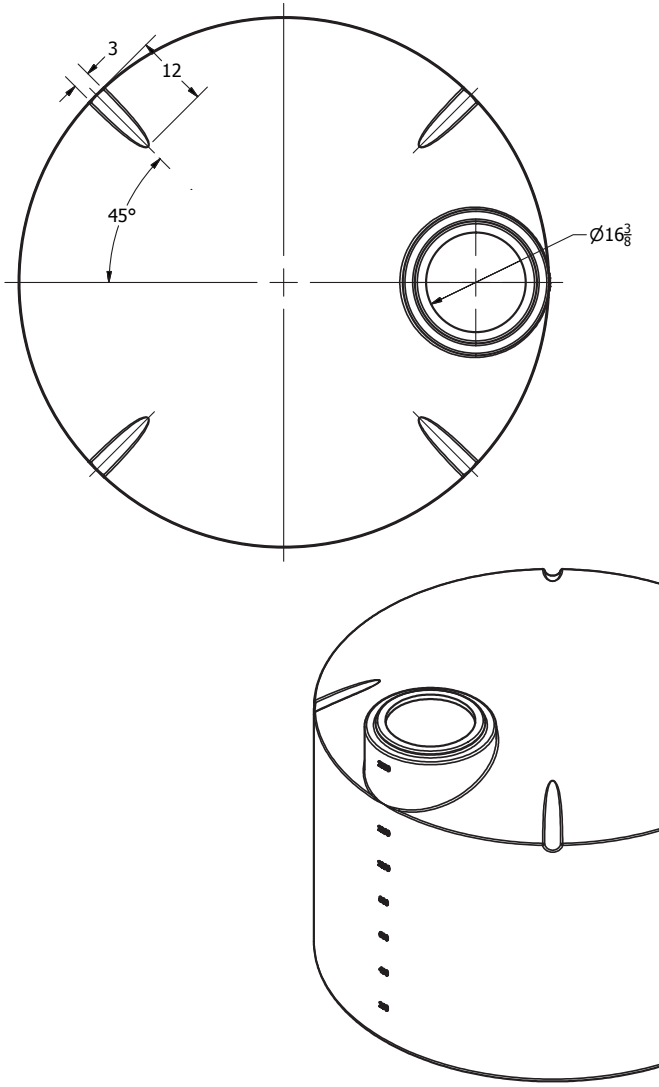

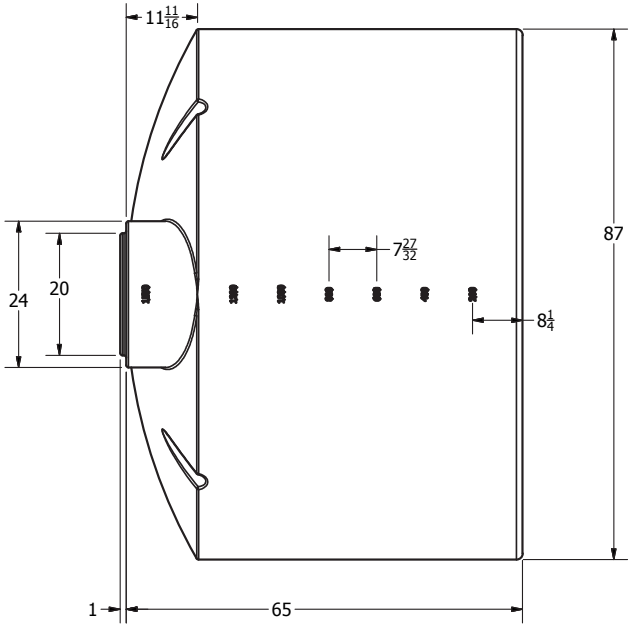

REVISION HISTORY			
REV	DESCRIPTION	DATE	AUTHOR
A	REDRAWN	1/2/1997	
B	REDRAWN	7/9/2013	Michael Holden

DRAWN Jerry Paulson	1/2/1997	NORWESCO, INC. SAINT BONIFACIUS, MN
CHECKED		TITLE
QA		1550 GALLON VERTICAL TANK
MFG		
APPROVED		SIZE B / DWG NO / REV B
		SCALE: 1/16 / SHEET 1 OF 1

This document contains proprietary information. It is intended solely for use of potential clients involved or to be involved in a transaction with BARR Plastics Inc.

© 2019 BARR PLASTICS INC