QSFP28-2QSFP28-AOC3M-C-C

Cisco® Compatible TAA 100GBase-AOC QSFP28 to 2xQSFP28 Active Optical Cable (850nm, MMF, 3m)

Features:

- Single 3.3V Power Supply
- Up to 25.78 Gbps per channel
- Low power consumption: 1.65W on 100G end
- 0.95W on 50G end with all CDRs enabled
- Operating temperature: 0 to 70 Celsius
- Hot Pluggable
- RoHS compliant and Lead Free

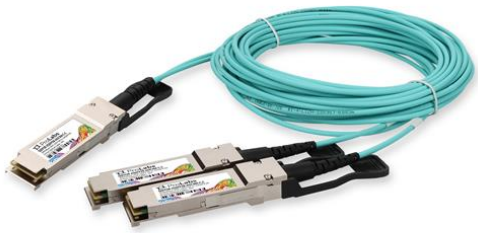

Applications:

- 50/100G Ethernet
- Data center: Switches, servers, storages and NIC adapters

Product Description

This is a Cisco® compatible 100GBase-AOC QSFP28 to 2xQSFP28 active optical cable that operates over multi-mode fiber with a maximum reach of 3.0m (9.8ft). At a wavelength of 850nm, it has been programmed, uniquely serialized, and data-traffic and application tested to ensure it is 100% compliant and functional. This active optical cable is TAA (Trade Agreements Act) compliant, and is built to comply with MSA (Multi-Source Agreement) standards. We stand behind the quality of our products and proudly offer a limited lifetime warranty.

ProLabs' transceivers are RoHS compliant and lead-free.

TAA refers to the Trade Agreements Act (19 U.S.C. & 2501-2581), which is intended to foster fair and open international trade. TAA requires that the U.S. Government may acquire only "U.S.-made or designated country end products.")

Rev. 011926

Absolute Maximum Ratings

Parameter	Symbol	Min.	Typ.	Max.	Unit	Notes
Storage Temperature	Tstg	-40		85	˚C	1
Operating Case Temperature	Tc	0		70		
Power Supply Voltage	Vcc	0		3.6	V	
Relative Humidity	RH	0		85	%	
Data Rate (Per Lane)	DR		25.78		Gbps	
Minimum Bend Radius		30			mm	2
		60			mm	3
Length Tolerance		30m: +500mm/-0mm				

Notes:

1. Ambient.
2. Without tension.
3. Under maximum tension.

Electrical Characteristics

Parameter		Symbol	Min.	Typ.	Max.	Unit	Notes
Power Supply Voltage		Vcc	3.13	3.3	3.47	V	
Power Supply Current	**100G End**	Icc		500		mA	1
	50G End			290			
Power Consumption	**100G End**			1.65	1.73	W	1
	50G End			0.95	1		
Transmitter							
Input Differential Impedance		RIN	90	100	110	Ω	
Differential Data Input Voltage		VIN,pp	200		900	mV	
Receiver							
Output Differential Impedance		ROUT	90	100	110	Ω	
Differential Data Output Voltage		VOUT,pp		800		mV	
Bit Error Ratio					10^{-8}		2

Notes:

1. Per end.
2. Pre-FEC Bit Error Ratio with a PRBS $2^{31} – 1$ test pattern.

Pin Descriptions

Pin	Symbol	Name/Description	Notes
1	GND	Module Ground.	1
2	Tx2-	Transmitter Inverted Data Input.	
3	Tx2+	Transmitter Non-Inverted Data Input.	
4	GND	Module Ground.	1
5	Tx4-	Transmitter Inverted Data Input.	
6	Tx4+	Transmitter Non-Inverted Data Input.	
7	GND	Module Ground.	1
8	ModSelL	Module Select.	
9	ResetL	Module Reset.	
10	VccRx	+3.3V Receiver Power Supply.	2
11	SCL	2-Wire Serial Interface Clock.	
12	SDA	2-Wire Serial Interface Data.	
13	GND	Module Ground.	1
14	Rx3+	Receiver Non-Inverted Data Output.	
15	Rx3-	Receiver Inverted Data Output.	
16	GND	Module Ground.	1
17	Rx1+	Receiver Non-Inverted Data Output.	
18	Rx1-	Receiver Inverted Data Output.	
19	GND	Module Ground.	1
20	GND	Module Ground.	1
21	Rx2-	Receiver Inverted Data Output.	
22	Rx2+	Receiver Non-Inverted Data Output.	
23	GND	Module Ground.	1
24	Rx4-	Receiver Inverted Data Output.	
25	Rx4+	Receiver Non-Inverted Data Output.	
26	GND	Module Ground.	1
27	ModPrsL	Module Present.	
28	IntL	Interrupt.	
29	VccTx	+3.3V Transmitter Power Supply.	2
30	Vcc1	+3.3V Power Supply.	2
31	LPMode	Low-Power Mode.	3
32	GND	Module Ground.	1
33	Tx3+	Transmitter Non-Inverted Data Input.	
34	Tx3-	Transmitter Inverted Data Input.	
35	GND	Module Ground.	1
36	Tx1+	Transmitter Non-Inverted Data Input.	
37	Tx1-	Transmitter Inverted Data Input.	
38	GND	Module Ground.	1

Notes:

1. GND is the symbol for signal and supply (power) common for the QSFP module. All are common within the QSFP module, and all module voltages are referenced to this potential unless otherwise noted. Connect these directly to the host board signal-common ground plane.
2. VccRx, Vcc1, and VccTx are the receiver and transmitter power supplies and shall be applied concurrently. VccRx, Vcc1, and VccTx may be internally connected within the QSFP transceiver module in any combination. The connector pins are each rated for a maximum current of 500mA.
3. Not in use.

Electrical Pin-Out Details

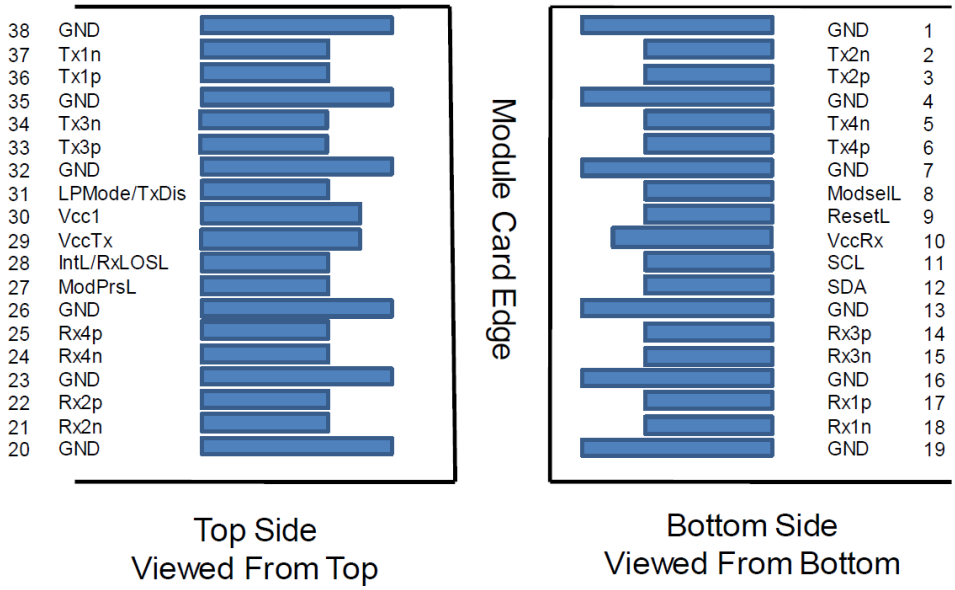

Recommended Power Supply Filter

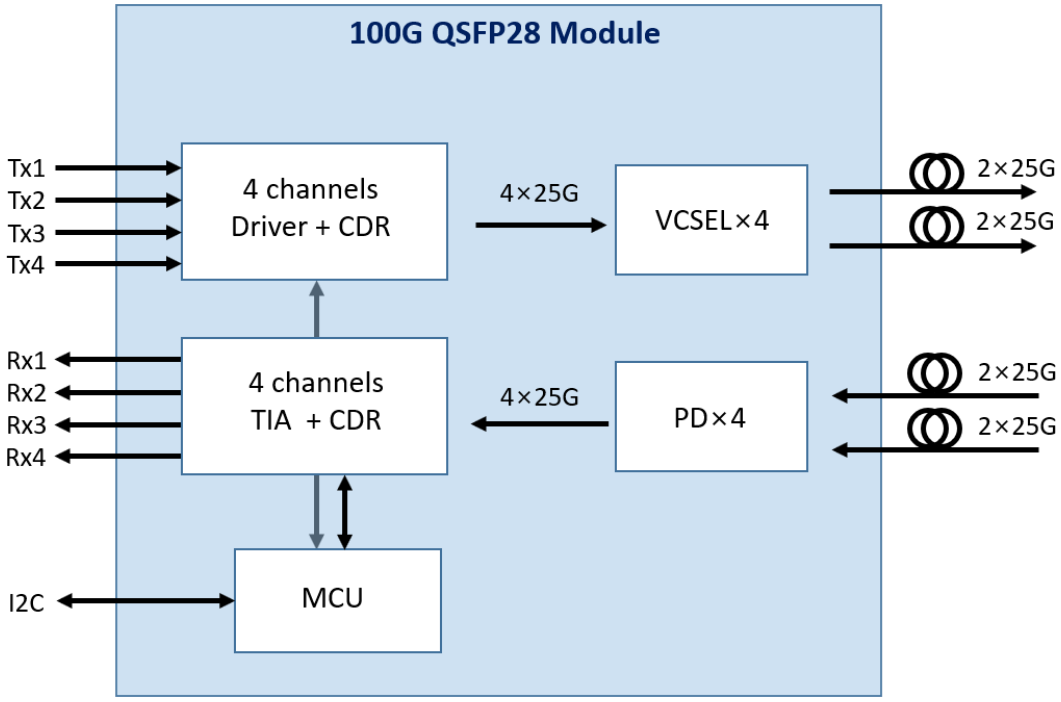

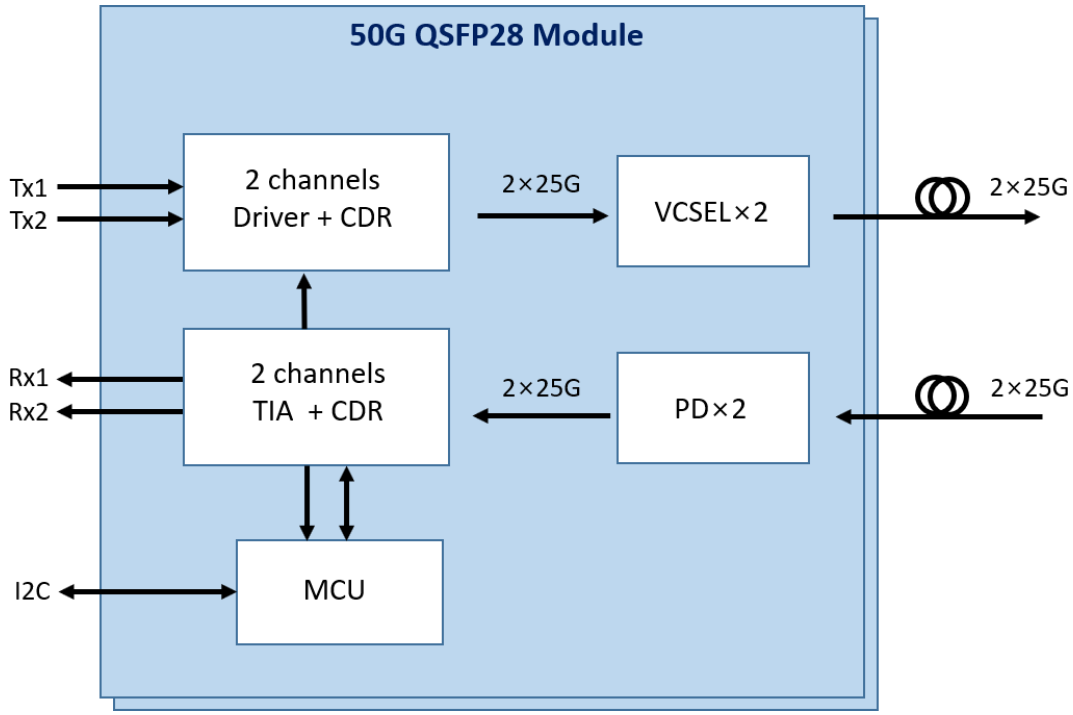

Mechanical Specifications

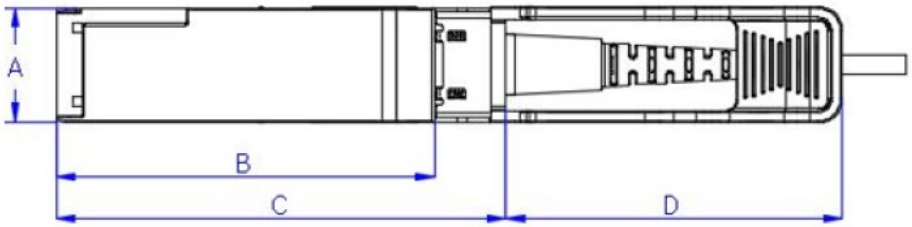

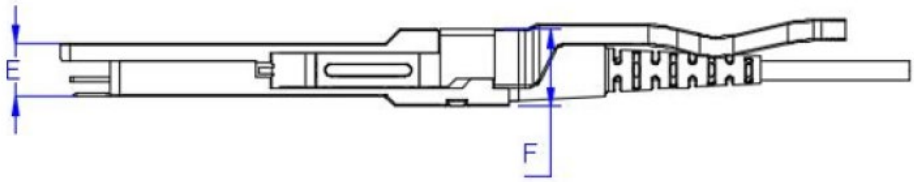

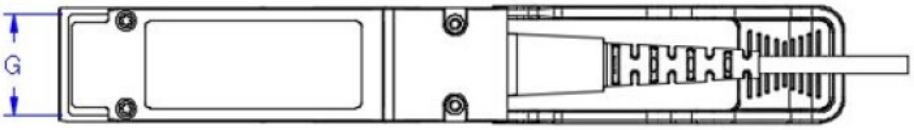

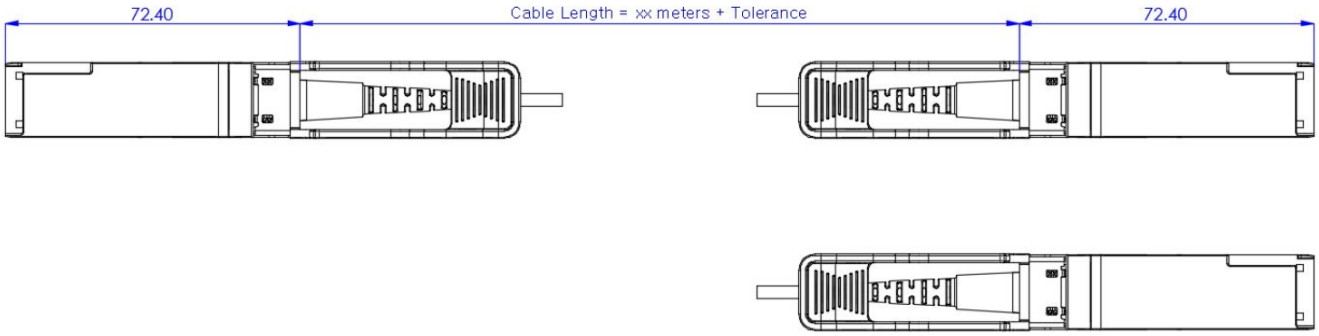

Num.	DIM (mm)	TOL (mm)
A	18.35	±0.10
B	60.90	±0.20
C	72.40	±0.20
D	53.80	±0.30
E	8.50	±0.10
F	12.55	±0.20
G	16.40	±0.10

About ProLabs

Our extensive experience comes as standard. For over 20 years ProLabs has delivered optical connectivity solutions that give our customers freedom and choice through our ability to provide seamless interoperability. At the heart of our company is the ability to provide state-of-the-art optical transport and connectivity solutions that are compatible with more than 100 optical switching and transport platforms.

A Complete Portfolio of Network Solutions

ProLabs is focused on innovations in optical transport and connectivity. The combination of our knowledge of optics and networking equipment enables ProLabs to be your single source for optical transport and connectivity solutions from 100Mb to 1.6T while providing innovative solutions that increase network efficiency. We provide the optical connectivity expertise that is compatible with and enhances your switching and transport equipment.

The Trusted Partner

Customer service is our number one value. ProLabs has invested in people, labs and manufacturing capacity to ensure compatible products, and immediate answers to your questions. With Engineering and Manufacturing offices in the U.K. and U.S. augmented by field offices throughout the U.S., U.K. and Asia, ProLabs is able to be our customers best advocate 24 hours a day.

Contact Information

ProLabs US

Email: sales@prolabs.com
Telephone: 952-852-0252

ProLabs UK

Email: salessupport@prolabs.com
Telephone: +44 1285 719 600