ONS-GX-2FC-SML-C

Cisco® ONS-GX-2FC-SML Compatible TAA 1000Base-LX GBIC Transceiver (SMF, 1310nm, 10km, SC)

Features:

- SFF-8053 Compliance
- Duplex SC Connector
- Single-mode Fiber
- Commercial Temperature 0 to 70 Celsius
- Hot Pluggable
- Metal with Lower EMI
- Excellent ESD Protection
- RoHS Compliant and Lead Free

Applications:

- 1000Base-LX Ethernet
- 1x Fibre Channel
- Access and Enterprise

Product Description

This Cisco® ONS-GX-2FC-SML compatible GBIC transceiver provides 1000Base-LX throughput up to 10km over single-mode fiber (SMF) using a wavelength of 1310nm via an SC connector. Our transceiver is built to meet or exceed OEM specifications and is guaranteed to be 100% compatible with Cisco®. It has been programmed, uniquely serialized, and tested for data-traffic and application to ensure that it will initialize and perform identically. All of our transceivers comply with Multi-Source Agreement (MSA) standards to provide seamless network integration. This transceiver is Trade Agreements Act (TAA) compliant. We stand behind the quality of our products and proudly offer a limited lifetime warranty.

ProLabs' transceivers are RoHS compliant and lead-free.

TAA refers to the Trade Agreements Act (19 U.S.C. & 2501-2581), which is intended to foster fair and open international trade. TAA requires that the U.S. Government may acquire only "U.S.-made or designated country end products.")

Rev. 012026

Absolute Maximum Ratings

Parameter	Symbol	Min.	Max.	Unit
Supply Voltage	Vcc	-0.5	4.0	V
Storage Temperature	TS	-40	85	°C
Operating Humidity	RH	5	95	%

Recommended Operating Conditions

Parameter	Symbol	Min.	Typ.	Max.	Unit
Power Supply Voltage	Vcc	3.13	3.30	3.47	V
Power Supply Current	Icc			250	mA
Case Operating Temperature	Tc	0		70	°C
Data Rate (Gigabit Ethernet)			1.25		Gbps
Data Rate (Fibre Channel)			1.063		Gbps
9/125µm SMF	L			10	km

Electrical Characteristics (TOP=25°C, Vcc=3.3V)

Parameter	Symbol	Min.	Typ.	Max.	Unit	Notes
Transmitter						
Input differential impedance	Rin	85	100	115	Ω	1
Single ended data input swing	Vin, pp	250		1200	mV	
TX Disable-High		2		3.45	V	
TX Disable-Low		0		0.8	V	
TX Fault-High		2		Vcc+0.3	V	
TX Fault-Low		0		0.5	V	
Receiver						
Single ended data output swing	Vout, pp	300	400	800	mV	2
Data output rise time	tr			175	ps	3
Data output fall time	tf			175	ps	3
LOS-High		2		Vcc+0.3	V	
LOS-Low		0		0.8	V	

Notes:

1. AC coupled.
2. Into 100 ohm differential termination.
3. 20% - 80%

Optical and Electrical Characteristics

Parameter	Symbol	Min.	Typ.	Max.	Unit	Notes
Transmitter						
Average Output Power	PO	-9		-3	dBm	1
Optical Wavelength	λ	1260	1310	1360	nm	
Spectral Width	σ			4	nm	
Optical Rise/Fall Time	tr/tf			260	ps	2
Total Jitter	TJ			56.5	ps	
Optical Extinction Ratio	ER	9			dB	
Receiver						
Receiver Sensitivity	RSENS			-20	dBm	3,4
Maximum Received Power	RX_{MAX}	0			dBm	
Centre Wavelength	λC	1270		1600	nm	
LOS De-Assert	LOSD			-21	dBm	
LOS Assert	LOSA	-42			dBm	
LOS Hysteresis		0.5		5	dB	

Notes:

1. Class 1 Laser Safety.
2. Unfiltered, 20%-80%. Complies with GE and 1x FC eye masks when filtered.
3. Measured with conformance signals defined in FC-PI-2 Rev. 10.0 specifications.
4. Measured with PRBS 2^7-1 at 10^{-10} BER.

Pin Descriptions

Pin	Symbol	Name/Descriptions	Ref.
1	RX_LOS	Receiver Loss of Signal, logic high, open collector compatible, 4.7K to 10K Ohm pullup to VDDT on host	2
2	RGND	Receiver Ground (may be connected with TGND in GBIC)	2
3	RGND	Receiver Ground (may be connected with TGND in GBIC)	2
4	MOD DEF (0)	GBIC module definition and presence, bit 0, 4.7K to 10K Ohm pullup to VDDT on host	2
5	MOD_DEF (1)	GBIC module definition and presence, bit 1, 4.7K to 10K Ohm pullup to VDDT on host	2
6	MOD_DEF (2)	GBIC module definition and presence, bit 2, 4.7K to 10K Ohm pullup to VDDT on host	2
7	TX_DISABLE	Transmitter Disable, logic high, open collector compatible, 4.7K to 10K Ohm pullup to VDDT on GBIC	2
8	TGND	Transmitter Ground (maybe connected with RGND internally)	2
9	TGND	Transmitter Ground (maybe connected with RGND internally)	2
10	TX_FAULT	Transmitter Fault, logic high, open collector compatible, 4.7K to 10K Ohm pullup to VDDT on host	2
11	RGND	Receiver Ground (may be connected with TGND in GBIC)	1
12	-RX_DAT	Receive Data, Differential PECL	1
13	+RX_DAT	Receive Data, Differential PECL	1
14	RGND	Receiver Ground (may be connected with TGND in GBIC)	1
15	VDDR	Receiver +5 volt (maybe connected with VDDT in GBIC)	2
16	VDDT	Transmitter +5 volt (maybe connected with VDDR in GBIC)	2
17	TGND	Transmitter Ground (maybe connected with RGND internally)	1
18	+TX_DAT	Transmit Data, Differential PECL	1
19	-TX_DAT	Transmit Data, Differential PECL	1
20	TGND	Transmitter Ground (maybe connected with RGND internally)	1

Notes:

1. TX Fault is open collector/drain output, which should be pulled up externally with a 4.7K – 10KΩ resistor on the host board to supply <VccT+0.3V or VccR+0.3V. When high, this output indicates a laser fault of some kind. Low indicates normal operation. In the low state, the output will be pulled to <0.8V.
2. TX Disable input is used to shut down the laser output per the state table below. It is pulled up within the module with a 4.7-10K resistor. Low (0V-0.8V): Transmitter on between (0.8V and 2V): Undefined High (2.0-VccT): Transmitter Disabled Open: Transmitter Disabled.

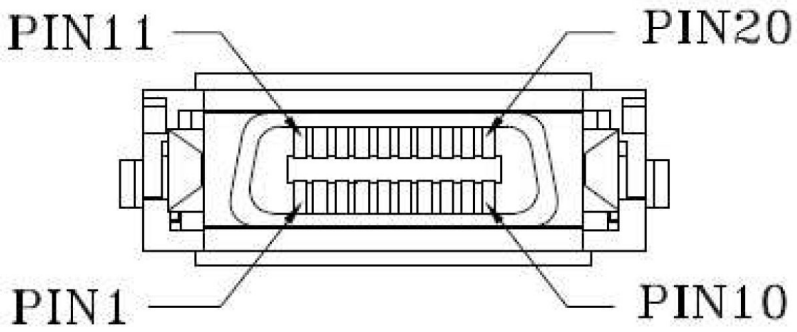

Pin-out of connector Block on Host board

Recommended Circuit Schematic

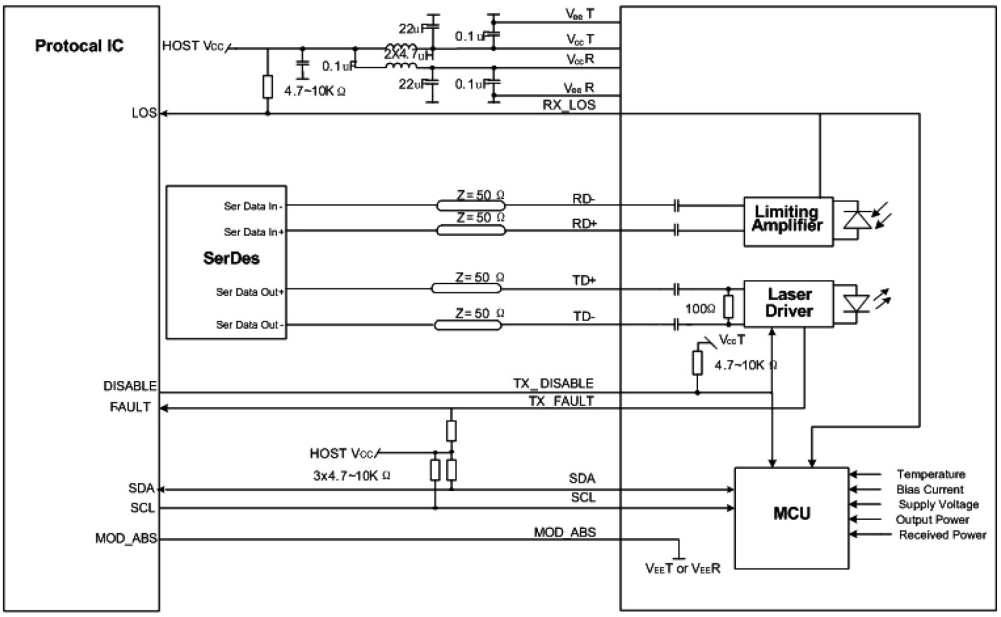

Mechanical Specifications

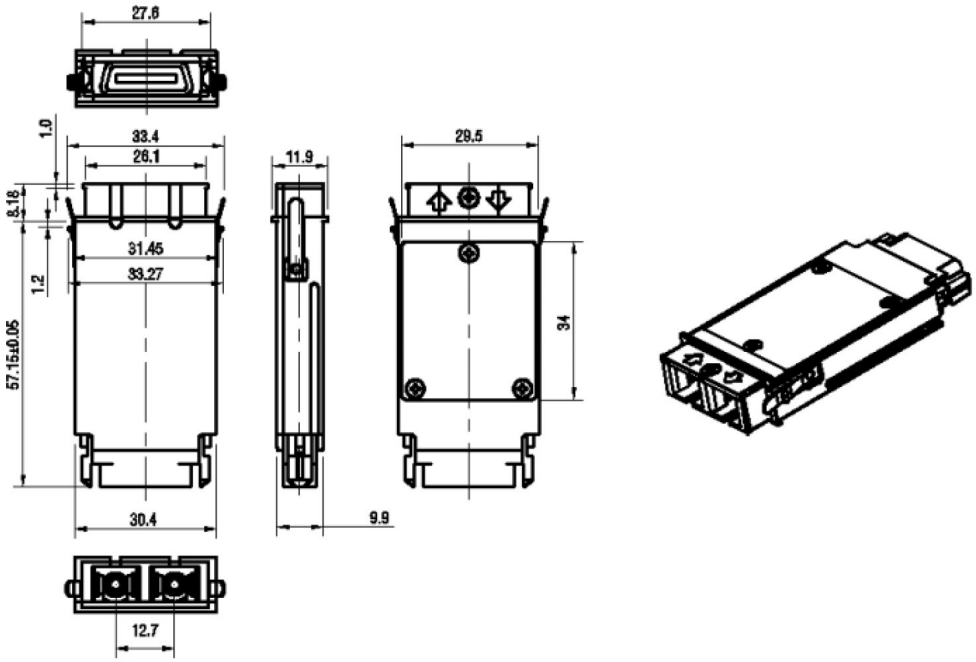

EEPROM Information

EEPROM memory map specific data field description is as below:

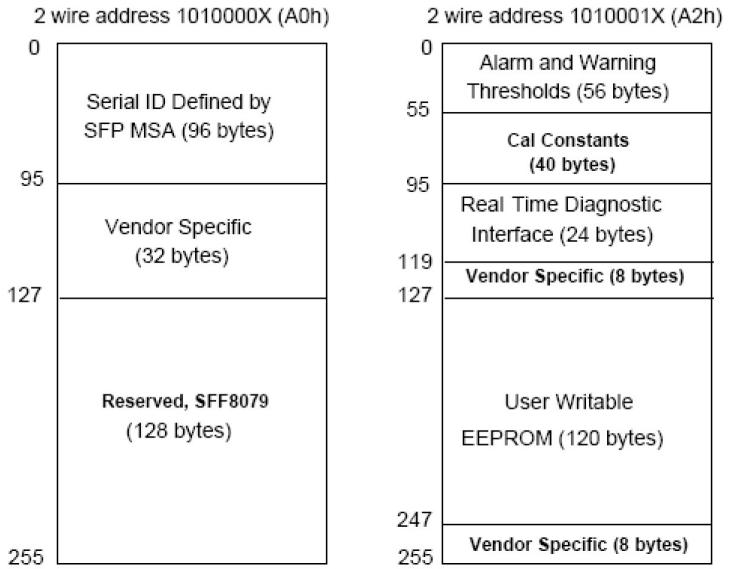

About ProLabs

Our extensive experience comes as standard. For over 20 years ProLabs has delivered optical connectivity solutions that give our customers freedom and choice through our ability to provide seamless interoperability. At the heart of our company is the ability to provide state-of-the-art optical transport and connectivity solutions that are compatible with more than 100 optical switching and transport platforms.

A Complete Portfolio of Network Solutions

ProLabs is focused on innovations in optical transport and connectivity. The combination of our knowledge of optics and networking equipment enables ProLabs to be your single source for optical transport and connectivity solutions from 100Mb to 1.6T while providing innovative solutions that increase network efficiency. We provide the optical connectivity expertise that is compatible with and enhances your switching and transport equipment.

The Trusted Partner

Customer service is our number one value. ProLabs has invested in people, labs and manufacturing capacity to ensure compatible products, and immediate answers to your questions. With Engineering and Manufacturing offices in the U.K. and U.S. augmented by field offices throughout the U.S., U.K. and Asia, ProLabs is able to be our customers best advocate 24 hours a day.

Contact Information

ProLabs US

Email: sales@prolabs.com
Telephone: 952-852-0252

ProLabs UK

Email: salessupport@prolabs.com
Telephone: +44 1285 719 600